4 ONLINE/INTERACTIVE CAPABILITIES

NPPS provides three major online processing capabilities: personnel, payroll, and application administration. These capabilities are described in greater detail in this section.

The three major capabilities are further divided into their various operations. For each operation, the following information is provided. Sections marked with an asterisk (*) are included for an individual operation only when required.

- Display of the Screen(s)
- Description and Execution
- User Input *
- System Provided Data *
- Description of Data Processing Results and Outputs
- Interrelationships *
- Options *

User inputs are explained in the NPPS Data Dictionary. A data dictionary is also available for viewing online. By typing **DD** in the command line, you may exit NPPS and move to the data dictionary from any menu or template. When you have completed your research, press **PF3** until you return to your original menu or template.

All error messages are listed in Appendix B and will be displayed on the screen when appropriate.

Limitations and options are discussed throughout the guide when they are relevant.

4.1 Personnel

```
COMMAND: ________                    NPPS
NEO0000                  PERSONNEL MAIN MENU - PERMM
-------------------------------------------------------------------------------

                    CENTER ID:         NPPS VERSION:

                    ENTER ONE OF THE FOLLOWING SELECTIONS: __

                      1 - PERSONNEL ACTIONS
                      2 - PLANNING ACTION
                      3 - MATURE PROCESS
                      4 - SF-50/SF-52 PROCESSING
                      5 - TABLES MAINTENANCE
                      6 - ACI
                      7 - MASS ACTIONS
                      8 - EMPLOYEE SERVICE RECORD
                      9 - PERSONNEL HISTORY FILE MAINTENANCE
                     10 - PERSONNEL AUDIT BROWSE

-------------------------------------------------------------------------------
 PF1= HELP                      PF5= MAIN MENU                      PF12= END
```

Personnel Main Menu (PERMM)

DESCRIPTION AND EXECUTION

NPPS maintains NASA personnel data in a form that can readily be retrieved and updated. This capability is accomplished through the Personnel Main Menu (PERMM), which is composed of 10 major operations. Following are the operations as listed on the Personnel Main Menu and a brief description of each.

1. Personnel Actions: Provides the capability for processing all personnel actions for new or existing employees.
2. Planning Action: Creates Within Grade (WIG) Increases, Changes in Tenure, or Changes in TSP Eligibility and places them on the suspense file.
3. Mature Process: Matures (applies) personnel actions from the suspense file to the database.
4. SF 50/SF 52 Processing: Prints SF 50s and SF 52s.
5. Tables Maintenance: Allows maintenance of the personnel tables.
6. ACI: Prepares ACIs on the suspense file.
7. Mass Actions: Allows for a select set of mass/global NOACs to be created.
8. Employee Service Record: Displays an employee's service record.
9. Personnel History File Maintenance: Changes and/or deletes personnel action history records.
10. Personnel Audit Browse: Browses the contents of the personnel history audit records.

Step to Reach the Personnel Main Menu

1. At the Main Menu, select **1** - Personnel.

4.1.1 Personnel Actions Main Menu

```
COMMAND: ________                    NPPS
NEO1000              PERSONNEL ACTIONS MAIN MENU - PERMAIN
--------------------------------------------------------------------------------


                    ENTER ONE OF THE FOLLOWING SELECTIONS: _


                      1 - SF 50 PERSONNEL ACTION PROCESSING

                      2 - VIEW MASTER RECORD

                      3 - QUERY SUSPENSE FILE

                      4 - MASS DELETION OF SUSPENDED ACTIONS

                      5 - SF 52 PERSONNEL ACTION PROCESSING


--------------------------------------------------------------------------------
 PF1= HELP                    PF5= MAIN MENU                    PF12= END
```

Personnel Actions Main Menu (PERMAIN)

DESCRIPTION AND EXECUTION

The Personnel Actions Main Menu (PERMAIN) is used to select one of the five functions available in this section. Each function is described briefly below (as illustrated in Figure 4.1.1-1).

1. SF 50 Personnel Action Processing: Processes a personnel action for a new or existing employee.
2. View Master Record: Displays employee data from the master record.
3. Query Suspense File: Queries the suspense file for existing actions.
4. Mass Deletion of Suspended Actions: Deletes user-specified personnel action(s) on the suspense file.
5. SF 52 Personnel Action Processing: Processes a request for personnel action for a new or existing employee.

<u>Steps to Reach the Personnel Actions Main Menu</u>

1. At the Main Menu, select **1** - Personnel.
2. At the Personnel Main Menu, select **1** - Personnel Actions.

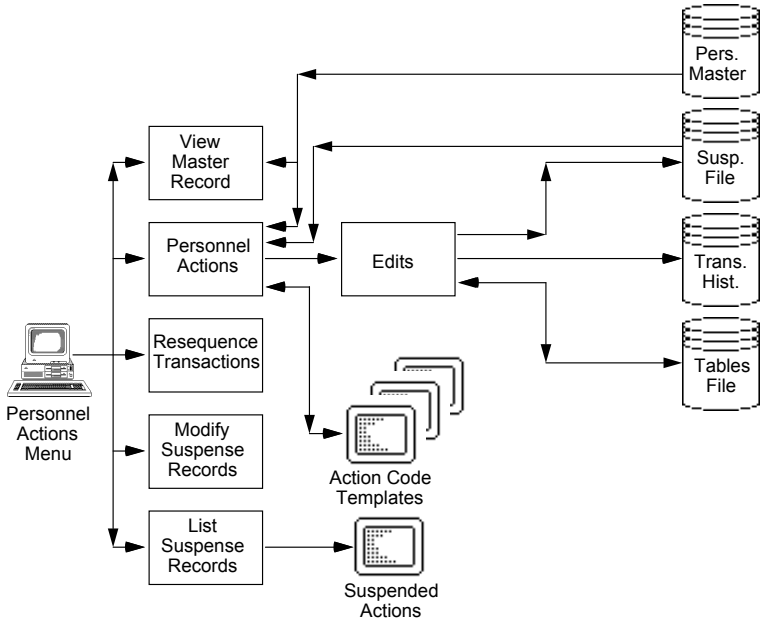

Figure 4.1.1-1 Personnel Actions

4.1.1.1 SF 50 Personnel Action Processing

```
COMMAND: ________                    NPPS
NEO1001         SF 50 PERSONNEL ACTION PROCESSING MENU - PERACT
--------------------------------------------------------------------------------

SSN: ___ __ ____  NOAC: _____  EFDATE: __ __ ____  FUNC: _
NAME(LAST,FIRST): _______________________  ____________

     FUNCTION                DESCRIPTION

        A            ADD THE ACTION TO SUSPENSE
        C            CHANGE AN EXISTING SUSPENSE ACTION
        D            DELETE AN EXISTING SUSPENSE ACTION
        E            CHANGE THE EFDATE OF AN EXISTING SUSPENSE ACTION
        H            CHANGE SSN ON ACCESSION ACTION
        R            RETRIEVE AN EXISTING SUSPENSE ACTION
        S            RE-SEQUENCE SUSPENSE ACTIONS
        T            CONVERT SF52 ACTION TO SF50 ACTION

--------------------------------------------------------------------------------
 PF1= HELP                       PF5= MAIN MENU                      PF12= END_
```

SF 50 Personnel Action Processing Menu (PERACT)

DESCRIPTION AND EXECUTION

The SF 50 Personnel Action Processing Menu (PERACT) is used to add an action to the suspense file, change or delete an action on the suspense file, view an existing suspense action, change the effective date of an existing action, change the SSN on accession and subsequent actions, re-sequence suspense actions, or convert an SF 52 action to an SF 50 action. First, you must enter the necessary information about the employee (i.e., SSN, NOAC, Effective Date, or Name). Then select a function by entering its letter in the blank marked FUNC. All the available functions are listed on the screen.

When you press **ENTER**, you will receive the series of templates which correspond to the function you requested.

Personnel data is processed through a series of personnel actions identified by a NOAC. NPPS processes all employee personnel actions described in the FPM and those identified by NASA as having a NOAC in the 900 series. Each NOAC lists only those fields that you are allowed or required to enter. Required fields are those for which data must be entered. Optional fields are those for which data may be entered. The user has the capability to define optional fields as locally required fields at the NOAC level using table TREQFLD (refer to Description in PERTAB section).

As you complete each screen of mandatory and optional entries for a given personnel action, NPPS tests your entries on a single edit check basis (e.g., verifies the FEHB code you entered actually occurs in the FEHB table).

NPPS displays informative error messages when edit errors occur. OPM edit errors appear in the form of the OPM edit code, and you may request to view the corresponding description of any error code. After you have completed all the

mandatory and optional entries for the entire action (i.e., all related screens), NPPS performs a relational edit check. If all the entries for the action being processed pass the relational edit check, the action is placed on the suspense file. If one or more of the entries do not pass the edit check, NPPS displays the OPM error codes in the top, left corner of the screen. You must then correct the entry in error and resubmit the action for processing.

Authorized individuals may place an action which does not pass edit checks on suspense by electing to bypass the edits. When you elect to bypass edits by placing X in the bypass edit field, all relational and single field value edits are ignored. NPPS allows you to process actions for non-NASA employees without having to enter data in those fields that are required for NASA employees by placing **S** or **N** in the bypass edit field. The "S" represents the subset of OPM to be performed (System/Software Requirements Specification (SRS) Table 3-8) and the "N" represents no OPM edits. On all actions other than accession NOACs, the "S" will be the default for non-NASA employees.

NPPS ensures that the employee's most current master record is used for relational edit purposes for the action being processed. When an action is entered, all SF 50 actions in suspense with a different NOAC for that SSN which have not matured and have an Effective Date prior to, or equal to, the Effective Date of the action being entered will be temporarily applied (a mock update) to the employee record.

Multiple actions may be suspended for the same employee whether or not those actions have the same Effective Date. NPPS allows you to specify the sequence in which actions will be applied to the employee's master record for those actions with the same Effective Date. However, when a new action is suspended with an effective date earlier than the effective date of pre-existing SF 50 suspended actions, the pre-existing actions will be set to error status to ensure that they will be checked for impact from the new action.

NPPS allows you to modify or edit any unmatured suspended transaction. NPPS also allows you to delete any suspended transaction.

During the processing of an action, some of the fields are automatically filled in by NPPS. The information NPPS will enter in these fields may not be present at the time the screen is processed; this data is referred to as "System Provided Data." NPPS loads some fields using information you have already entered in a previous field. NPPS loads other fields using information from the personnel tables (i.e., NPPS performs table look-ups; e.g., Salary). You may override any entry which NPPS provides by typing in your own information.

If you want to zero fill a required data element, you may use "9" for a numeric field or a period (.) for an alpha field. You may also use the "9" to take out a numeric value or a period (.) to remove an alpha value which already exists in the master record.

An exception to this rule exists for Empl AUO Pct, Retention Allowance Percent, Staffing Differential Percent, and Supervisory Differential Percent. These fields

cannot be reset to zero directly, but by entering a **9** in the corresponding amount, the percent fields will be set to zero when the action is matured.

Once an action has been input on suspense and the appropriate fields have been filled in via a table look-up, the following procedure must be executed in order for the system to look up new values based on any changes made to the action.

First, change the action by entering the new data in the fields you wish to update. Then, erase the old values from the related table look-up fields. NPPS will look-up new values for these fields only if they are manually blanked out prior to the processing of each individual screen.

You have two other options that will enable you to update the table look-up fields. You may enter the updates to all related fields manually or delete the action from the suspense file and enter it with the updated data, thereby ensuring accurate table look-up values.

NPPS allows the modification of the effective date after it has been originally placed on the suspense file by choosing function **E** on the PERACT menu. NPPS also allows the re-sequencing of transactions that are effective on the same day for the same employee by choosing function S on the PERACT menu. However, changing the effective date or re-sequencing transactions does not automatically recalculate those fields that may be based on effective date or other data values. After the effective date has been modified or transactions have been re-sequenced, the user should do a change on the actions following the procedures described in the previous paragraph to properly ensure that all data is correct and a good SF 50 has been produced.

NPPS allows for the conversion of an SF 52 action to an SF 50 action by choosing function **T** on the PERACT menu. Only those actions for which an SF 52 has been printed will be allowed to be converted. During the conversion process, NPPS will reset to blank the following fields: Bypass Edit, Suspense Sequence, Combination, and Print Status. The edit function (FUNC on PERACT menu) will be reset to "C" and you will be positioned at the first input screen.

NPPS allows the modification of the SSN on accession and subsequent actions after they have been originally placed on the suspense file by choosing function **H** on the PERACT menu and specifying the accession action. This option is available only on transactions against a new hire (unmatured action with NOAC equal 100-199 or fourth character equals "A").

```
NEMXXXXA                  (SCREEN)A     SF52 DATA         0 OF 0
BY-PASS EDIT: _
 1.NAME(LAST,SUF,FIR,MI) 2.SSN            3.BIRTH DATE 0  0  0    > 0  0  0
                                                     4.EFDATE 0  0  0
 5A.NOAC         NOAC NTE  0  0  0       6A. NOAC        NOAC NTE  0  0  0
 5B. _________________________           6B.
     ___________________________________
 6C. AUTH1 ___                           6E. AUTH2 ___
 6D. _________________________           6F. _________________________
     ___________________________________     ___________________________________
 7.OPM TTL                                     /                    TITLE
       15.>                                    /                    CODE
 7.NASA TTL                                    /                       >
       15.>                                    /
  PDN          NCC         SUPIND       >   PDN          NCC         SUPIND
 8.PAY PLAN          9.OCC CODE        > 16.PAY PLAN         17.OCC CODE
10.GRADE  0         11.STEP            > 18.GRADE            19.STEP
12.TOTSAL 0.00      13.PAY BASIS       > 20.TOTSAL 0.00      21.PAY BASIS
-------------------------------------------------------------------------------
 PF1= HELP        PF2= TBL LOOKUP   PF3= PREV SCREEN   PF4= OPM MSG
 PF5= MAIN MENU   PF6= END ACTION   PF10= MASTER INQ   PF11= GO TO    PF12= END
```

Screen A

SYSTEM PROVIDED DATA

NPPS sets the Legal Authority descriptions based on the Legal Authorities entered by the user in accordance with personnel table TAUTH.

NPPS sets OPM Title, NASA Title, and Local Title based on the Title Code, Occupational Code, NASA Class Code, and Supervisory Indicator. When one of these four codes is updated, NPPS will look up and update the accompanying titles.

NPPS sets the Empl Tot Pay Amt equal to the sum of Empl Adjstd Basic Pay Amt and Empl Othr Pay Amt.

```
NEMXXXXB
                      (SCREEN) B -    (SF52 DATA)          0 OF 0
  BY-PASS EDIT: _
  NAME                                                        SSN
  12A.BASIC PAY                        >  20A.BASIC PAY      0.00_____
  12B.LOCALITY ADJ                     >  20B.LOCALITY ADJ   0____
  12C.ADJ BASIC PAY                    >  20C.ADJ BASIC PAY  0.00
  12D.OTHER PAY                        >  20D.OTHER PAY      0
  14.ORG ASSIGNED        >  22.ORG ASSIGNED  _____
     ORG LOCATED         >     ORG LOCATED   _____
  23.VET PREF      > _  24.TENURE    > _   26.VETPREF RIF        > _
  27.FEGLI         > __ 28.ANUIND    > _   29.PAYRAT DET         > _
  30.RET PLAN      > _                     31.SCD LV             > 0_ 0_ 0___
  32.WORKSCH       > _                     33.PT HOURS SCH       > __
  34.POS OCC       > _  35.FLSA      > _   36.APPROP CODE
  37.UNION BU      > ____                                  > _________________
  38.DUTY STATION            > _________
  45.ED LEVEL    > __  46.YR DEG       > ____  47.ACAD DISC          > ______
  48.FUNC CL     > __  49.CITIZEN      > _     50.VET STATUS         > _
 ---------------------------------------------------------------------------
  PF1= HELP             PF3= PREV SCREEN                        PF5= MAIN MENU
  PF6= END ACTION       PF10= MASTER INQ       PF11= GO TO      PF12= END
```

Screen B

USER INPUT

NPPS stores the Duty Station Name based on the Duty Station Code which you enter.

SYSTEM PROVIDED DATA

NPPS sets the Appropriation Code based on the value of the Project Line Item input by the user for non-NASA employees. This value is found in the TPRJLINE table.

NPPS sets Degree: Highest Level, Degree: Highest Year, and Degree: Highest Field to zero(s) if Educational Level changes to a value less than 10.

NPPS sets the Empl Basic Pay Amt in accordance with table TSALSTEP based on any change to Pay Table, Grade: Current, or Step and if the following criteria has been met:

1. Action being processed must be an accession, conversion, 702, 703, 713, 721, 740, 741, 866, 892, 893, 894, 002, or 001.
2. Employee's Pay Plan must not equal GM.
3. Employee's Step must not equal 0.
4. Employee's Pay Rate Determinant must equal 0, 5, 6, 7, A, B, C, E, F, or M.

NPPS sets the Empl Lclty Adjstmnt Anl Amt based on any change to Empl Basic Pay Amt or Empl Sch Basic Pay Amt when the Locality Adjustment Indicator is found in table TLOA.

NPPS sets Empl Adjstd Basic Pay Amt equal to the sum of Empl Basic Pay Amt or Empl Sch Basic Pay Amt when greater than zero and Empl Lclty Adjstmnt Anl Amt.

NPPS sets Empl Other Pay Amt equal to the sum of Retention Allowance, Supervisory Differential, Salary: Staffing Differential, and Empl AUO Anl Amt.

```
NEMXXXXC                        (REMARKS)                    0 OF 0
BY-PASS EDIT: _

NAME                                                          SSN
PART D - REMARKS BY REQUESTING OFFICE
 ___   ____________________________________________________________________
 ___   ____________________________________________________________________
 ___   ____________________________________________________________________
 ___   ____________________________________________________________________
 ___   ____________________________________________________________________
 ___   ____________________________________________________________________
 ___   ____________________________________________________________________
 ___   ____________________________________________________________________
 ___   ____________________________________________________________________
 ___   ____________________________________________________________________
 ___   ____________________________________________________________________
   AGENCY CODE       > ____   APP DATE  0_ 0_ 0_     SIGNATURE  _
   REQUIRED 50  _             PRINT STATUS  _        COMBINED   _
-----------------------------------------------------------------------------
 PF1= HELP        PF3= PREV SCREEN        PF5= MAIN MENU        PF6= END ACTION
 PF8= FWD         PF9= REM    PF10= MASTER INQ      PF11= GO TO        PF12= END_
```

SF 50 Remarks

USER INPUT

You may enter SF 50 Comment Codes to be associated with a personnel action, as well as insert input variables into the remark associated with the SF 50 Comment Code you enter, and override the remark associated with any SF 50 Comment Code as you desire.

NPPS sets a SF 50 Comment Code equal to P11 with the variable contained in this remark set equal to Empl Sch Basic Pay Amt when an employee is limited by the salary cap (Empl Sch Basic Pay Amt greater than zero) and is not General Merit (Pay Plan equals GM) or a Re-employed Annuitant (Annuitant Indicator equals 1, 4, or 5).

```
* PLEASE ADD/CHANGE DESIRED DATA


NEMXXXXE              (SCREEN)E   (FREQ. MISC. DATA)   0 OF 0
BY-PASS EDIT:  _
NAME                                                          SSN
ADMIN LEVEL          > _____     SEX             > _  COMPLEV           > _ ___
EMPNO                > ______    POS TYPE        > _  POS TYPE LOCAL    > _ _
SCH BASIC  0.00      > 0.00_____ DUTY STATUS     > _  PRIOR RET COVER   >  _
SCH LCLTY  0         > 0____     DEPART DEST     > _  AGENCY/ FROM      > _ ___
SCH ADJ    0.00      > 0.00      DEPART REASON   > _   INSTALL TO       > __ __
SCH TOT    0.00      > 0.00      HANDICAP        > __ EMP INDICATOR     > _
PAYTBL               > ___                           PROJ PROMOTION     > _ _
FEHB/FULL PAY        > ___ _     HI PAYPLAN      > __ FINSTM            > _
MINORITY             > _         FACILITY        > _  LV ENTITLEMENT    > _
HI GRADE          0  > __                 WIG WAIT    0  0  0    > 0_ 0_ 0__ _
FINSTM DATE    0  0  0    > 0_ 0_ 0___     NEXT WIG    0  0  0    > 0_ 0_ 0___
LAST EQV INC   0  0  0    > 0_ 0_ 0___     LAST PROMO  0  0  0    > 0_ 0_ 0___
CURRENT GRADE  0  0  0    > 0_ 0_ 0___     CRED MIL    0  0  0    > 0_ 0_ 0_
EOD            0  0  0    > 0_ 0_ 0___     NASA SCD    0  0  0    > 0_ 0_ 0___
FROZEN CSRS    0  0  0    > 0_ 0_ 0_       RIF SCD     0  0  0    > 0_ 0_ 0___
-------------------------------------------------------------------------------
PF1= HELP             PF3= PREV SCREEN                          PF5= MAIN MENU
PF6= END ACTION       PF10= MASTER INQ       PF11= GO TO        PF12= END
```

Screen E

USER INPUT

Employee Indicator is only used for non-paid employees. This will create a record on Personnel, but none on Payroll.

SYSTEM PROVIDED DATA

NPPS sets the Salary Scheduled in accordance with table TSALSTEP based on any change to Pay Table, Grade: Current, or Step and if the following criteria has been met.

1. Action being processed must be an accession, conversion, 702, 703, 713, 721, 740, 741, 866, 892, 893, 894, 002, or 001.
2. Employee's Pay Plan must not equal GM.
3. Employee's Step must not equal 0.
4. Employee's Pay Rate Determinant must equal 0, 5, 6, 7, A, B, C, E, F, or M.

```
NEMXXXXF         (SCREEN)F -         (FREQ. MISC. DATA)    0 OF 0
BY-PASS EDIT: _

NAME                                                          SSN
COOP:ENTRY       0  0  0    > 0_ 0_ 0___   TRAINING DEV PGM           > __
     RET TO DUTY 0  0  0    > 0_ 0_ 0___   NASA SPEC PGM              > ______
     RET TO SCH  0  0  0    > 0_ 0_ 0___   RTD     > _    RTD GRP     > __
SCD: RETIREMENT  0  0  0    > 0_ 0_ 0___   CPP     > __   POSCRIT     > ___
LOCAL TITLE:                              > ________________________
FERS/TSP:  FERS COVER    > _  TSP SCD         0  0  0    > 0_ 0_ 0___
           TSP STATUS    > _  TSP STAT DATE   0  0  0    > 0_ 0_ 0___
           TSP VEST      > _  TSP ELIG DATE   0  0  0    > 0_ 0_ 0___
           TSP SEPCDE    > _  TSP SEP DATE    0  0  0    > 0_ 0_ 0___
NON NASA PROJ LI             > __________
RETIRED MIL:RETIRE 0  0  0    > 0_ 0_ 0___ PAY STATUS           > _
            SERV COMPONENT    > _          RET BASIS            > _
            SERV PAY GRD      > ___        SERV NUM             > ___________
                                           SERV DESIGNATION     > _
-------------------------------------------------------------------------------
PF1= HELP            PF3= PREV SCREEN     PF5= MAIN MENU
PF6= END ACTION      PF10= MASTER INQ     PF11= GO TO              PF12= END_
```

Screen F

```
NEMXXXXG
                    (SCREEN) G    (MISC. INFREQ.)      0 OF 0
 BY-PASS EDIT: _
 NAME                                                        SSN
               FIELD             SCHOOL           YEAR       LEVEL      GPA
 HIGH                      01001002 > ________                 > _  0.00 > 0.00
 2               > ______           > ________       > ____    > _  0.00 > 0.00
 3               > ______           > ________       > ____    > _  0.00 > 0.00
 4               > ______           > ________       > ____    > _  0.00 > 0.00
 COOP/PMI        > ______           > ________       > ____    > _  0.00 > 0.00
                                         BDYR        > ____     FTELI      >
 LIMITS:                                RETIREMENT:
   SEVERANCE  0.00      > 0.00_____      OPTIONAL              > 0_ 0_ 0___
   DAY            0    > 0__            DISCONT               > 0_ 0_ 0___
   HOURS          0    > 0___           FERS MRA   0  0  0    > 0_ 0_ 0___

 LINE NUMBER           > ________        PARAGRAPH           > ________
RESERVES:  BRANCH     > __ RANK     > __        HEAD OF AGENCY     > _
RETAIN: PAYPLN    > __ GRD    > __ STP    > __ EXP DTE 0  0  0    > 0_ 0_ 0___
-------------------------------------------------------------------------------
 PF1= HELP             PF3= PREV SCREEN                          PF5= MAIN MENU
 PF6= END ACTION       PF10= MASTER INQ       PF11= GO TO        PF12= END
```

Screen G

SYSTEM PROVIDED DATA

NPPS sets the Degree: Bachelor Year to zero if Degree: Highest Level is changing to a value not equal to Bachelors (B), Masters (M), or Doctorate (D).

```
NEMXXXXH              (SCREEN)H -        (SUSPENSE DATES)  0 OF 0
BY-PASS EDIT: _

NAME                                                          SSN

NTE DATES:                                  ENDING  DATES:
APPOINTMENT    0  0  0    > 0_ 0_ 0___      CONVERSION   0  0  0    > 0_ 0_ 0___
FURLOUGH       0  0  0    > 0_ 0_ 0___      PROBATION    0  0  0    > 0_ 0_ 0___
SABBATICAL LV  0  0  0    > 0_ 0_ 0___      NEW SUPV     0  0  0    > 0_ 0_ 0___
LEAVE W/O PAY  0  0  0    > 0_ 0_ 0___      TENURE       0  0  0    > 0_ 0_ 0___
LEAVE WITH PAY 0  0  0    > 0_ 0_ 0___      SVC AGRMNT   0  0  0    > 0_ 0_ 0___
POSITION CHG   0  0  0    > 0_ 0_ 0___      SES PROB     0  0  0    > 0_ 0_ 0___
SUSPENSION     0  0  0    > 0_ 0_ 0___      BEGINNING  DATES:
PROMOTION      0  0  0    > 0_ 0_ 0___      NEW SUPV     0  0  0    > 0_ 0_ 0___
RETENTION ALW  0  0  0    > 0_ 0_ 0___      TENURE       0  0  0    > 0_ 0_ 0___
RIF EXTENSION  0  0  0    > 0_ 0_ 0___

-------------------------------------------------------------------------------
PF1= HELP            PF3= PREV SCREEN     PF5= MAIN MENU     PF6= END ACTION
PF10= MASTER INQ     PF11= GO TO          PF12= END
```

Screen H

USER INPUT

Conversion is used for a suspense date and will appear on the Tickler report. The Conversion date is to be used to change an employee to a Career or a Career Conditional Appointment.

```
NEMXXXXI                (SCREEN)I -        (MISC)        0 OF 0
BY-PASS EDIT: _


NAME                                                          SSN
NEW NAME:
      ______________________  ___  ____________  ____________

NEW SSN:  ___ __ ____

FOLLOW UP CODES AND DATES:
1)    > __    0  0  0    > 0_ 0_ 0___      2)    > __    0  0  0    > 0_ 0_ 0___
3)    > __    0  0  0    > 0_ 0_ 0___      4)    > __    0  0  0    > 0_ 0_ 0___
5)    > __    0  0  0    > 0_ 0_ 0___      6)    > __    0  0  0    > 0_ 0_ 0___
7)    > __    0  0  0    > 0_ 0_ 0___      8)    > __    0  0  0    > 0_ 0_ 0___

-------------------------------------------------------------------------------
PF1= HELP            PF3= PREV SCREEN     PF5= MAIN MENU     PF6= END ACTION
PF10= MASTER INQ     PF11= GO TO          PF12= END
```

Screen I

SYSTEM PROVIDED DATA

If an employee's name changes, NPPS sets the Previous Name to the old name.

NPPS changes all historical data for an employee to reflect the current value for SSN, Previous SSN, and Name when that employee's SSN or name changes.

```
                          (SCREEN)J -        (MISC)        0 OF 0
BY-PASS EDIT: _
NEMXXXXJ

NAME                                                          SSN
DETAIL:
  OPM TITLE                                          /
             > ________________________________________ / _________________
  NASA TITLE                                         /
             > ________________________________________ / _________________
  TITLE CODE                > __
  PDN                       > ______        NCC                    > ___ __
  PAY PLAN                  > __            OCC CODE               > _____
  GRADE                 0   > __            ORG ASSIGNED           > _____
  DUTY STATION              > _________     ENDING DATE 0  0  0    > 0_ 0_ 0___
  INSTALLATION LOCATED        > ____


-------------------------------------------------------------------------------
PF1= HELP          PF3= PREV SCREEN       PF5= MAIN MENU       PF10= MASTER INQ
PF11= GO TO        PF12= END
```

Screen J

```
NEMXXXXK        (SCREEN)K -        (BONUS/DIFF/ALLOW)     0 OF 0
BY-PASS EDIT: _

NAME                                                          SSN

LOCALITY ADJUSTMENT INDICATOR      >

BONUS/DIFFERENTIAL BASIS     > _

RECRUITMENT BONUS %      > __     RECRUITMENT BONUS AMOUNT         > _____
RELOCATION BONUS %       > __     RELOCATION BONUS AMOUNT          > _____
                                  PHYS COMP ANNL AMT               > _____
                                  AVLBTY ANNUAL AMNT               > _____
AUO %                    > __     AUO ANNUAL AMOUNT                > _____
RETENTION ALLOW %        > __     RETNTN ALLOW ANNL AMNT           > _____
STAFFING DIFF %          > __     STAFFING DIFF ANNL AMNT          > _____
SUPERVISORY DIFF %       > __     SUPRVSRY DIFF ANNL AMNT          > _____
                                  FOREIGN LANG ANNL AMNT           > _____

-------------------------------------------------------------------------------
PF1= HELP            PF3= PREV SCREEN     PF5= MAIN MENU     PF6= END ACTION
PF10= MASTER INQ     PF11= GO TO          PF12= END
```

Screen K

SYSTEM PROVIDED DATA

NPPS sets the Locality Adjustment Indicator according to table TLOA based on any change to Duty Station. The AVLBTY ANNUAL AMNT is equal to 25 percent of the Adjusted Basic Pay Amt (results 50 cents and over are increased to next whole dollar).

```
NEMXXXXL                (SCREEN)L  -        (MISC. INFREQ.)  0 OF 0
BY-PASS EDIT: _
NAME                                                          SSN

    RATING     YEAR              EFDATE                PATTERN
CUR  0 > _       > __    0  0  0    > 0_ 0_ 0___            > _
PR1  0 > _       > __    0  0  0    > 0_ 0_ 0___            >
PR2  0 > _       > __    0  0  0    > 0_ 0_ 0___            >
PR3  0 > _       > __    0  0  0    > 0_ 0_ 0___            >

AWARDS:
  CHK     YEAR    TYPE   AMOUNT
    > _     > __    > _    > 0.00____
                             TIME OFF HRS/LYTD
                               > 0.0__ / 0.0
  GROUP TEXT > ______________________________
  AWD BUDGET           > ________

-------------------------------------------------------------------------------
PF1= HELP             PF3= PREV SCREEN       PF5= MAIN MENU
PF6= END ACTION       PF10= MASTER INQ       PF11= GO TO        PF12= END
```

Screen L

SPECIAL PF KEY

The capability exists to input either Net or Gross Award Amount for NOAC 840, 841, and 877 On the Spot Awards, but the final On the Spot Award Amount must be Gross. Therefore, when Net Award Amount is entered, **PF9 GROSS AWDAMT** must be used to calculate Gross Award Amount.

If Gross Award Amount is entered, normal processing takes place.

```
 NEMXXXXM                (SCREEN)M -        (CAPPS)       0 OF 0
 BY-PASS EDIT: _
NAME                                                          SSN
AWARDS:                QTY YR                              ASCN ACTION:
  HONORARY            > _   __                               AUTH1  > ___
  PERFORMANCE SES     > _   __                               AUTH2  > ___
  QUALITY INCREASE    > _   __                              EFDATE  > __ __ ____
  SPECIAL ACT         > _   __   PREVIOUS:                   NOAC   > _____
                                   BASIC PAY  > _________
COUNTER CODES:                     DUTY STN   > _________  CVNRSN ACTION:
  APPOINTMENT         > _          GRADE      > __           AUTH1  > ___
  AWARDS              > _          LOCAL ADJ  > _____        AUTH2  > ___
  CAO                 > __         OCC CODE   > _____       EFDATE  > __ __ ____
  CONVERSION          > _          PAY BASIS  > __           NOAC   > _____
  DOWNGRADE           > _          PAY PLAN   > __
  OTHER AWARDS        > __         PAYRAT DET > _          APPOINTMENT:
  PERFORMANCE AWARDS  > __         STEP       > __           AUTH1  > ___
  TRAINING            > __         WORKSCH    > _            AUTH2  > ___
-------------------------------------------------------------------------------
 PF1= HELP         PF3= PREV SCREEN       PF5= MAIN MENU       PF6= END ACTION
 PF11= GO TO       PF12= END
```

Screen M

USER INPUT

Screen **M** will only appear when the NOAC equals 721A or 991. Report 460 generated by the losing installation and forwarded to the gaining installation contains the necessary data for input.

In addition to the four standard PF keys (PF1=Help, PF3=Previous Screen, PF5=Main Menu, and PF12=End), four special PF keys are listed on the personnel action screens. These PF keys are only available during the processing of a personnel action.

PF2=Table Lookup - Directs NPPS to look up the remarks for the Authority Code or titles based on the title codes which you must enter on the first screen of the series (A). You may override the default description or title by typing in the description or title you prefer. The table lookup key does not apply to the salary field. This option is only available on Screen A.

PF4=OPM Messages - Allows you to display the description of any OPM message. This option is useful after you complete all your entries for an action and attempt to place that action on the suspense file. If NPPS finds any relational edit error, it will return you to the first screen of the series and display the OPM Edit codes in the top, left corner of this screen. In order to view a description for a code, press **PF4** and type in the code. This option is only available on the first screen in the series.

PF6=End Action - Used to complete the action without paging through the remainder of the screens available in the series. This option is available on all screens in the series.

PF9=SF 50 REM - Used to display the description of the Remarks Codes to determine the appropriate variables for the specific conditions which apply to the

employee whose action is being processed. This option is only available on the SF 50 Remarks screen of the series.

PF11=GO TO - Allows the user to directly access a specific screen by pressing this key and entering the desired page number when prompted with a pop-up window. This option is available on all screens in the series. This option is also available in PERMAST and HISTMAIN.

Steps to Reach Personnel Action Processing

1. At the Main Menu, select **1** - Personnel.
2. At the Personnel Main Menu, select **1** - Personnel Actions.
3. At the Personnel Actions Main Menu, select **1** - SF50 Personnel Action Processing.

DESCRIPTION OF DATA PROCESSING RESULTS AND OUTPUT

NPPS generates a suspended personnel transaction for each personnel action consisting of the transaction as input.

4.1.1.2 View Master Record

```
COMMAND: ________                    NPPS
NEO1200                  VIEW MASTER RECORD - PERMAST
-------------------------------------------------------------------------------


SSN:  ___ __ ____      TYPE:  _

NAME:  _______________________ ____________
          (LAST NAME)         (FIRST NAME)

     TYPE             DESCRIPTION

      D        RETRIEVE IN DATA BASE FIELD FORMAT
      P        RETRIEVE IN PERSONNEL ACTION FORMAT




-------------------------------------------------------------------------------
 PF1= HELP                  PF5= MAIN MENU                    PF12= END
```

View Master Record (PERMAST)

DESCRIPTION AND EXECUTION

The View Master Record (PERMAST) template is used to retrieve information from an employee's master record.

<u>Steps to Reach View Master Record</u>

1. At the Main Menu, select **1** - Personnel.
2. At the Personnel Main Menu, select **1** - Personnel Action.
3. At the Personnel Actions Main Menu, select **2** - View Master Record.

DESCRIPTION OF DATA PROCESSING RESULTS AND OUTPUT

You have the option to retrieve the information in two formats. You may select to view the record in the Data Base Field Format (**D**) or the Personnel Action Input Format (**P**). The Personnel Action Input Format is displayed in the same order and layout as input during personnel action input. The database format displays the fields alphabetically by database name.

4.1.1.3 Query Suspense File

```
COMMAND: ________                    NPPS
NEO1300                   SUSPENSE QUERY - PERSUSPQ
--------------------------------------------------------------------------------


    LIST ACTIONS FOR EMPLOYEE:
    SSN:  ___ __ ____
    NAME:(LAST,FIRST)   ______________________    ____________

    LIST ACTIONS ON OR BEFORE EFDATE:  __ __ ____

    LIST ACTIONS FOR NOAC:  _____

    LIST ACTIONS FOR SOURCE:  _

    LIST ACTIONS FOR CLERK ID: ____________


--------------------------------------------------------------------------------
 PF1= HELP                  PF5= MAIN MENU                    PF12= END
```

Suspense Query (PERSUSPQ)

DESCRIPTION AND EXECUTION

The Suspense Query (PERSUSPQ) template is used to specify and retrieve existing actions from the suspense file.

This display includes the following:

- SSN
- Transaction Identifier (NOAC)
- Effective Date
- Sequence Number
- Whether or not a combination SF 50/SF 52 was specified
- Whether or not an SF 50/SF 52 has been printed
- Whether or not the action has been applied to the employee's master record
- Whether or not the action was created by online data entry or by a system function (such as Planning Actions)
- Whether or not the transaction has errors
- Whether or not the Edit Bypass Code was specified
- Action Update Clerk

- Whether or not the action is an SF 52

Steps to Reach Suspense Query

1. At the Main Menu, select **1** - Personnel.
2. At the Personnel Main Menu, select **1** - Personnel Actions.
3. At the Personnel Actions Main Menu, select **3** - Query Suspense.

DESCRIPTION OF DATA PROCESSING RESULTS AND OUTPUT

You may select a list of existing actions based on five criteria: (**1**) SSN or Name, (**2**) Effective Date, (**3**) NOAC, (**4**) Source of the action, and (**5**) Clerk ID.

The valid source codes are as follows.

C	Personnel Actions (clerk from online entry)		
P	Planning Actions	A	ACI
T	Mass Transfer	I	Installation-Unique Interface
L	Mass Realignment	F	Mass Furlough
G	Mass Performance Rating	W	Mass Award
H	Mass Change in Health Plan	N	Mass Change in NCC
S	TSP Change	O	Mass Change in Organ: Nam
D	Mass Duty Station Change	J	Mass Locality Payment
B	Mass Change in Appropriation	M	Mass Miscellaneous
R	Mass Return to Duty		

4.1.1.4 Mass Deletion of Suspended Actions

```
COMMAND: ________                    NPPS
NEM1400          MASS DELETION OF SUSPENDED ACTIONS - PDELETE
-------------------------------------------------------------------------------


                              CLERK:  ____________

                             EFDATE:  __ __ ____

                               NOAC:  _____

                 PAYTBL (ACI'S ONLY):  ___

                             SOURCE:  _



-------------------------------------------------------------------------------
 PF1= HELP                      PF5= MAIN MENU                      PF12= END_
```

Mass Deletion of Suspended Actions (PDELETE)

DESCRIPTION AND EXECUTION

The Mass Deletion of Suspended Actions (PDELETE) template is used to specify and delete a group of personnel actions on the suspense file.

<u>Steps to Reach Mass Deletion of Suspended Actions</u>

1. At the Main Menu, select **1** - Personnel.
2. At the Personnel Main Menu, select **1** - Personnel Actions.
3. At the Personnel Actions Main Menu, select **4** - Mass Deletion of Suspended Actions.

DESCRIPTION OF DATA PROCESSING RESULTS AND OUTPUT

The group of actions to be deleted will be selected by Source, NOAC, Effective Date, or Action Update Clerk. Pay Table may be specified when the NOAC is 894.

4.1.1.5 SF 52 Personnel Action Processing

```
COMMAND: ________                    NPPS
NEO1500       SF 52 PERSONNEL ACTION PROCESSING MENU - PERACT52
--------------------------------------------------------------------------------

SSN: ___ __ ____  NOAC: _____  EFDATE: __ __ ____  FUNC: _
NAME(LAST,FIRST): ______________________  ____________

     FUNCTION                DESCRIPTION

        A            ADD THE ACTION TO SUSPENSE
        C            CHANGE AN EXISTING SUSPENSE ACTION
        D            DELETE AN EXISTING SUSPENSE ACTION
        E            CHANGE THE EFDATE OF AN EXISTING SUSPENSE ACTION
        H            CHANGE SSN ON ACCESSION ACTION
        R            RETRIEVE AN EXISTING SUSPENSE ACTION
        S            RE-SEQUENCE SUSPENSE ACTIONS



--------------------------------------------------------------------------------
 PF1= HELP                  PF5= MAIN MENU                    PF12= END
```

SF 52 Personnel Action Processing Menu (PERACT52)

DESCRIPTION AND EXECUTION

The SF 52 Personnel Action Processing Menu (PERACT52) is used to add an SF 52 action to the suspense file, change or delete an SF 52 action on the suspense file, view an existing SF 52 suspense action, change the effective date of an existing SF 52 action, or re-sequence SF 52 suspense actions. First, you must enter the necessary information about the employee (i.e., SSN, NOAC, Effective Date, or Name). Then select a function by entering its letter in the blank marked FUNC. All the available functions are listed on the screen.

The SF 52 Personnel Action Processing system functions exactly as the SF 50 Personnel Action Processing system, except "X" is generated in the Bypass Edit field (an "S" is generated for NON-NASA employees). Refer to Section 4.1.1.1 for details on how to enter a personnel action and convert an SF 52 action to an SF 50 action.

4.1.2 Planning Action Menu

```
COMMAND: ________                    NPPS
NEM2000                PLANNING ACTIONS TEMPLATE - PLAN
                           (MASTER TO SUSPENSE FILE)
-------------------------------------------------------------------------------

    (X OR                                          START          STOP
    BLANK)                                        MM DD YY       MM DD YY

      _    CHANGE IN TENURE GROUP         (880)  __ __ __       __ __ __

      _    WITHIN GRADE INCREASE      (891/893)  __ __ __       __ __ __

      _    THRIFT SAVING PLAN             (943)  __ __ __       __ __ __
           PRINT TSP LETTER  _ (Y/N)

                       880'S     891'S     893'S     943'S     991'S
           SUSPENDED
           REJECTED

-------------------------------------------------------------------------------
 PF1= HELP                      PF5= MAIN MENU                      PF12= END
```

Planning Actions Template (PLAN)

DESCRIPTION AND EXECUTION

The Planning Actions Template (PLAN) provides for the advance preparation of three specific personnel actions, as illustrated in Figure 4.1.2-1. All information required for processing is available from the master record, or is system generated. Eligible employees are selected based upon the Eligibility Beginning and Ending Dates which you provide. Following are the four Personnel Actions which are created and suspended for future maturation: (1) Changes in Tenure (NOAC 880), (2) WIG Increases (NOAC 893, 891), (3) Changes in TSP Eligibility (NOAC 943), and (4) Adjusted Next WIG Date due to excess LWOP (NOAC 991).

<u>Steps to Reach Planning Actions Template</u>

1. At the Main Menu, select **1** - Personnel.
2. At the Personnel Main Menu, select **2** - Planning Action.

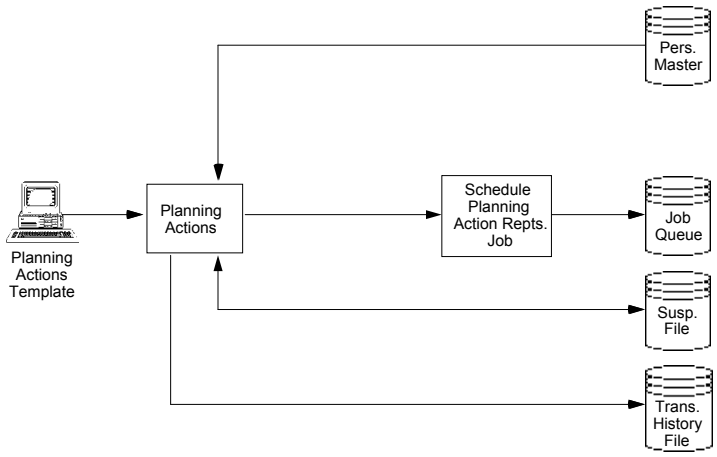

Figure 4.1.2 - 1 Planning Actions

DESCRIPTION OF DATA PROCESSING RESULTS AND OUTPUT

Upon completion of the planning action requested, NPPS displays the count of the number of actions suspended and rejected for the specified NOAC. In addition, each of the four types of planning actions has unique output as described below.

Change in Tenure (NOAC 880) - Generated and suspended for each employee meeting the eligibility criteria. In addition, all the dates necessary to print the SF 50 will be created as part of the suspended transaction.

WIG Increase (NOAC 891, 893) - Generated and suspended for each employee meeting the eligibility criteria. In addition, all data necessary to print the SF 50 will be available and two reports are available for scheduling as batch jobs.

- LWOP Report
- Acceptable Level of Competence Report (generated for each employee transaction)

Adjusted Next WIG Date (NOAC 991) - Generated and suspended for each eligible employee who has excess LWOP that causes the waiting period for the employee's next WIG increase to be adjusted beyond the Stop date entered on the input screen.

During this process, NPPS first checks to see if the employee has excess LWOP. If so, it then calculates the adjusted date when the individual will no longer have excess LWOP. The system then checks to see if the adjusted date still falls within the date range you provided when you requested the planning action. If the adjusted date does fall within this range, NPPS will still build a NOAC 891 or NOAC 893 for this individual. If not, NPPS cannot build a NOAC 891 or NOAC 893, but it does change the next WIG date via a NOAC 991 in order to create an

appropriate eligibility date. As a result, this individual will be picked up during the next WIG planning action providing he/she does not accumulate additional excess LWOP.

TSP Eligibility (NOAC 943) - Generated and suspended for each employee meeting the eligibility criteria. In addition, the option to create a TSP letter (NE00004, TSP letter) for each eligible employee is available through the batch job scheduler capability. At the time that each TSP Eligibility action is matured, the TSP information is integrated into the Payroll file to start the automatic one percent agency contribution for those employees under FERS.

4.1.3 Mature Process Menu

```
COMMAND: ________                    NPPS
NEO3000                   MATURE PROCESS TEMPLATE - MATURE
--------------------------------------------------------------------------------

    ALL ACTIONS WITH EFFECTIVE DATES ON OR BEFORE THIS DATE WILL MATURE

                            MATURE DATE: __ __ __


NAME SEARCH:
  NAME (LAST, FIRST): ______________________   ____________


MATURE THESE SSN'S ONLY: ___ __ ____ , ___ __ ____ , ___ __ ____ , ___ __ ____
                         ___ __ ____ , ___ __ ____ , ___ __ ____ , ___ __ ____
                         ___ __ ____ , ___ __ ____ , ___ __ ____ , ___ __ ____
                         ___ __ ____ , ___ __ ____ , ___ __ ____ , ___ __ ____
                         ___ __ ____ , ___ __ ____ , ___ __ ____ , ___ __ ____


--------------------------------------------------------------------------------
 PF1= HELP                  PF5= MAIN MENU                    PF12= END
```

Mature Process Template (MATURE)

DESCRIPTION AND EXECUTION

The Mature Process Template (MATURE) is used to apply the suspended actions for all employees or selected employees based on the Effective Date specified, and thereby updates each employee's current master record, as illustrated in Figure 4.1.3-1. NPPS applies suspended transactions with an effective date on or before the date specified when you press **ENTER**. You have the option of maturing all actions that meet the date criteria or only the actions for the specified SSNs entered.

When mature processing is initiated, NPPS automatically edits each suspended action unless you elected to bypass the edits when the action was entered into NPPS. If an action fails an edit, NPPS places the action in an error status and all subsequent actions for that SSN will not be applied to the employee's master record. You may correct the error and reprocess the action. You must also reprocess all subsequent actions in order to remove the error flag set for each action. You may then re-execute the mature.

NPPS matures multiple actions with the same Effective Date for a single SSN in the sequence defined. NPPS recomputes an employee's normal pay and deductions based on a change in Birth Date, FEHB Plan Code, FEGLI Plan Code, Retirement Plan, or Salary when the action is applied to the employee's record.

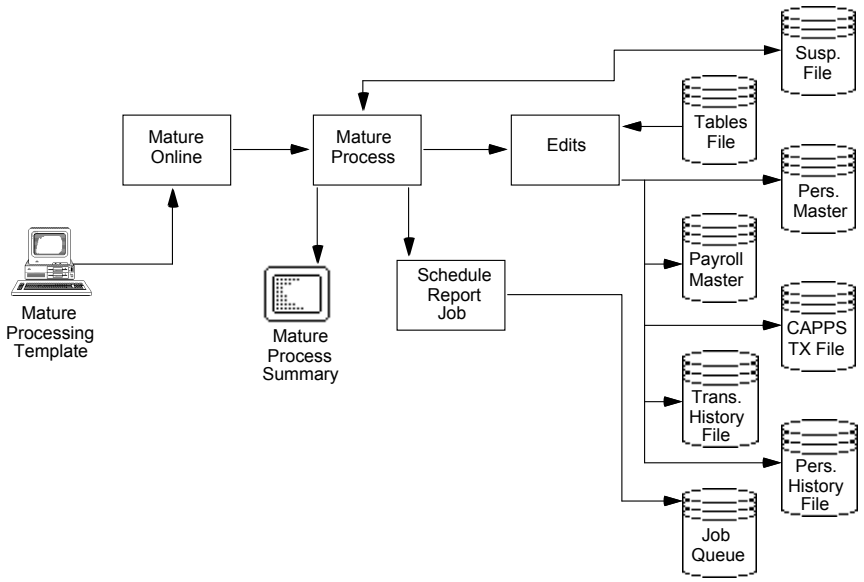

Figure 4.1.3-1 Mature Process

Steps to Reach Mature Process Template

1. At the Main Menu, select **1** - Personnel.
2. At the Personnel Main Menu, select **3** - Mature Process.

DESCRIPTION OF DATA PROCESSING RESULTS AND OUTPUT

Upon completion of the mature processing, each employee's record reflects the most current information as of the last matured transaction. In addition, two reports are generated from the Mature Process: (1) Mature Transaction and Error Report and (2) Mature Transaction Integration Report. If there are no suspended personnel transactions that fall within the specified date range, these reports will not be generated. This includes an online (screen display) summary report of any mature processing error which reflects such information as the SSN, Transaction Identifier, Effective Date, and Error Message. To run Mature using the Batch Job Scheduler (BJS), refer to Section 5, Batch User Capability.

4.1.4 SF 50/SF 52 Processing Menu

```
COMMAND: ________                    NPPS
NEM4000                SF50/SF52 PRINT SELECTION - SEL50
(X OR BLANK)
             SELECT FORM:  SF50  _  SF52  _
      _      ALL THAT HAVE NOT BEEN PRINTED
      _      ALL WITH FACILITY  _
      _      ALL WITH CLERK ID  ____________
      _      ALL WITH EFDATES  __ __ __ THRU __ __ __
      _      ALL WITH THESE NOAC'S   _____ , _____ , _____ , _____
                                     _____ , _____ , _____ , _____
      _      ALL FOR THESE SSN'S  ___ __ ____ , ___ __ ____ , ___ __ ____
                                  ___ __ ____ , ___ __ ____ , ___ __ ____
-------------------------------------------------------------------------------
             PRINT DESTINATION  ________   XEROX COPIES __
      _      ALIGNMENT PRINTING
      _      DISREGARD PRINT FLAG FOR SELECTION
      _      DO NOT SET PRINT FLAG
     __      SELECT THIS NUMBER AND STOP
      _      REPRINT LAST SET
-------------------------------------------------------------------------------
 PF1= HELP                 PF5= MAIN MENU                    PF12= END
```

SF 50/SF 52 Print Selection (SEL50)

DESCRIPTION AND EXECUTION

The SF 50/SF 52 Print Selection (SEL50) template is used to print the SF 50 Notification of Personnel Action or the SF 52 Request for Personnel Action for any employee transaction requiring an OPM/NOAC, as illustrated in Figure 4.1.4-1. Eleven options are displayed on this screen. The options are divided into two groups and the groups are separated by a dotted line. You select an option by typing **X** in the blank to the left of the option.

The first group of options allows you to specify which SF 50/SF 52 should be printed. You may select one of the following: All Not Printed, All with Efdates (beginning date) Through (ending date), All with these NOACs (specify a maximum of eight NOACs), All for these SSNs (specify a maximum of six SSNs), All with facility, or All with Clerk ID. If you select one of these options alone, the system will print the type of SF 50/SF 52 you request <u>which has not already been printed</u>.

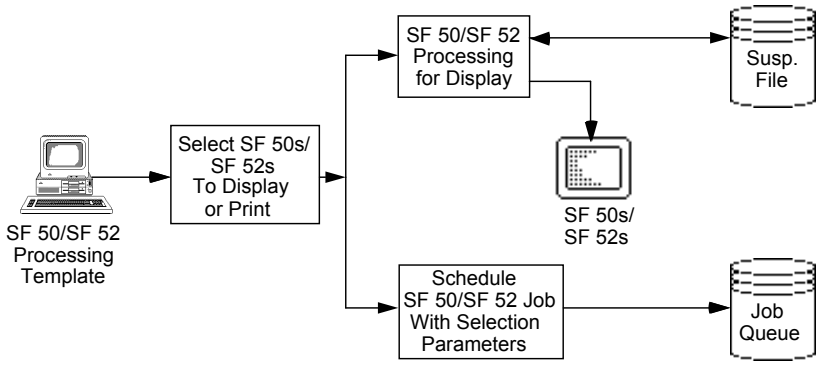

Figure 4.1.4-1 SF 50/SF 52 Processing Menu

You may select one or more of the options in the second group in order to further define the set of SF 50s/SF 52s you want to print. To print five alignment SF 50s/SF 52s before your selected SF 50s/SF 52s, select the Alignment option. To reprint SF 50s/SF 52s which have already been printed, you may select the Disregard Print Flag for Selection option. If you are executing a trial print, you may select Do Not Set Print Flag. To preview a select number of SF 50s/SF 52s before printing a large group, type the number of SF 50s/SF 52s to be printed in the blank to the left of the Select This Number And Stop option. To reprint exactly the group of SF 50s/SF 52s selected for the last printing, choose Reprint Last Set. You may use a combination of selections with the one exception of "Reprint Last Set." This option should be selected by itself only. All SF 50s/SF 52s will go to the default printer destination unless specified otherwise. When you select a print destination, the Xerox copies defaults to 3 for SF50 and only one SF52 form is printed for any type of print destination.

Three other SF 50/SF 52 print items are available during personnel action processing at the Remarks screen. The first item is Combined 50/52. If you enter **Y** in this field, NPPS prints a dual SF 50/SF 52 (i.e., two separate actions on the same SF 50/SF 52) when an employee has two or more personnel actions with the same effective date and they are sequenced first and second for that day. If you leave this field blank, NPPS prints only a single SF 50/SF 52 for this action.

The second item, 50/52 Print Status, displays "P" if an SF 50/SF 52 has been printed for this action. This "P" represents the Print Flag previously mentioned.

NPPS determines whether or not an SF 50 is required for each action as defined in table TNOAC. However, you may choose to make this determination yourself using the Required 50 field. This is the third SF 50 print item on the SF 50 Remarks screen. Type **N** in the blank following this item if an SF 50 is not required for this action; otherwise, leave the item blank. This option is not available on the SF 52.

Steps to Reach SF 50/SF 52 Print Selection

1. At the Main Menu, select **1** - Personnel.
2. At the Personnel Main Menu, select **4** - SF 50/SF 52 Processing.

DESCRIPTION OF DATA PROCESSING RESULTS AND OUTPUT

You may initiate printing of all SF 50s/SF 52s or select a group of SF 50s/SF 52s (i.e., all that have not yet printed, all for selected employees, all for selected NOACs), all SF 50s/SF 52s for a selected facility, or all SF 50s/SF 52s for a selected clerk ID. This is done by entering **Y** in the blank to the left of your selection and entering other relevant information as required. For example, to print SF 50s for only certain employees, enter **Y** in the blank to the left of the selection, All for these SSNs. Then, **TAB** to the blanks to the right of the option and enter up to six SSNs. You may also select the number of SF 50s/SF 52s to be printed by entering this number in the blank to the left of the selection, Select This Number and Stop.

You may determine the contents to be printed in certain blocks of the SF 50 (25, 40, 41, 42, 43, and 44). This is done using the TSF50BLK personnel table. This table lists the 10 items which may be displayed in the six blocks available. Type the number of the desired block to the left of the selected item. You may choose one item per block.

If you do not specify otherwise, the SF 50 Signature Code will be "1." You may view all the table entries for the SF 50 through the table maintenance capability which allows you to view the SF 50 Comments table (refer to Section 4.1.5).

The data printed in Blocks 7 and 15 is a combination of the descriptions that are input into tables TORG and CTLPER.

4.1.5 Tables Maintenance Menu

```
COMMAND: ________                    NPPS
NEO5000                PERSONNEL TABLES MENU - PERTAB
-------------------------------------------------------------------------------
                          TABLE RELEASE:


                     ENTER ONE OF THE FOLLOWING SELECTIONS

                          1  CORE TABLES MAINTENANCE

                          2  LOCAL TABLES MAINTENANCE


                               SELECTION: _




-------------------------------------------------------------------------------
 PF1= HELP                  PF5= MAIN MENU                    PF12= END
```

Personnel Tables Menu (PERTAB)

DESCRIPTION AND EXECUTION

The Personnel Tables Menu (PERTAB) is used to maintain personnel tables. This menu offers two selections.

1. Core Tables Maintenance: Select a personnel core table for viewing or updating.
2. Local Tables Maintenance: Select a personnel local table for viewing or updating.

<u>Steps to Reach Personnel Tables Menu</u>

1. At the Main Menu, select **1** - Personnel.
2. At the Personnel Main Menu, select **5** - Tables Maintenance.

4.1.5.1 Core Tables Maintenance Menu

```
* MAKE SELECTION OR HIT ENTER FOR ADDITIONAL TABLE IDS

COMMAND: ________                    NPPS
NEO5010              PERSONNEL CORE TABLES MENU - PERCORE

  TABLE         TABLE                        TABLE         TABLE
   ID        DESCRIPTION                      ID        DESCRIPTION
 --------    ------------------           --------     ------------------

 TAGENCY     AGENCY CODE                  TANUIND      ANNUITANT IND
 TAUTH       AUTHORITY CODE               TAWDTYP      AWARD TYPE
 TBONUS      BONUS DIFF BASIS             TCOMENT      SF50 COMMENTS
 TCPP        COMPETITIVE PLAN             TDEGFLD      EDUCATIONAL FIELD
 TDEGLEV     DEGREE LEVEL                 TDEGSCH      EDUCATIONAL SCHOOL
 TDEPARTD    DEPART DESTINATION           TDEPARTR     DEPART REASON
 TDTYSTN     DUTY STATION                 TDTYSTS      DUTY STATUS
 TEDLEV      EDUCATIONAL LEVEL            TFEGLI       FED GROUP LIFE INS
 TFEHB       HEALTH INSURANCE             TFUNCLS     FUNCTION CODE
 THNDICP      HANDICAP DESC.

ENTER THE TABLE ID OF THE TABLE YOU WISH TO PROCESS ==>  ________

--------------------------------------------------------------------------------
 PF1= HELP           PF3= PREV SCREEN   PF5= MAIN MENU        PF12= END
```

Personnel Core Tables Menu (PERCORE)

DESCRIPTION AND EXECUTION

The Personnel Core Tables Menu (PERCORE) is used to select a personnel core table to be viewed or updated. The listing of tables is displayed on multiple screens. You may move forward through the table list by pressing **ENTER**. When you locate the ID and description of the table you want to view or modify, type the ID in the blank provided at the bottom right corner of the screen and press **ENTER** one more time.

When you select a table, the first entry is displayed on the screen appropriate for the table selected. You now have six functions available for your use when viewing or modifying this table: add a new entry to the table (A=Add), view multiple table entries on a single screen (B=Browse), change an existing table entry (C=Change), delete an existing table entry (D=Delete), view the next table entry (N=Next), and retrieve information regarding an existing table entry (R=Retrieve).

<u>Steps to Reach Personnel Core Tables Menu</u>

1. At the Main Menu, select **1** - Personnel.
2. At the Personnel Main Menu, select **5** - Tables Maintenance.
3. At the Personnel Tables Menu, select **1** - Core Tables Maintenance.

4.1.5.2 Local Tables Maintenance Menu

```
* NO MORE TABLE IDS TO DISPLAY (TO REPEAT THE LIST, HIT ENTER)

COMMAND: ________                    NPPS
NEO5020             PERSONNEL LOCAL TABLES MENU - PERLOCAL

  TABLE         TABLE                        TABLE         TABLE
   ID        DESCRIPTION                      ID        DESCRIPTION
 --------    ------------------           --------     ------------------

 TADMINLV    ADMIN. LEVEL                 TAWDBDGT     AWARD BUDGET CODE
 TCMPAREA    COMPETITIVE AREA             TEMPIND      EMPLOYEE INDICATOR
 TFACILTY    FACILITY CODE                TFINSTM      FINANCIAL STATEMENT
 TFOLLOW     FOLLOW UP CODE               TORG         ORGANIZATION TABLE
 TPOSCRIT    POSITION CRITERIA            TPOSTYPL     POSITION TYPE LOC
 TPRJLINE    PROJECT LINE ITEM            TREQFLD      REQUIRED FIELD TBL
 TRTDGRP     RANDOM TEST GROUP            TSF50BLK     SF50 BLOCK
 TSIGNAT     SF50 SIGNATURE               TTITLE       TITLES TABLE
 TTRNDEV     TRAINING/DEV PGM


ENTER THE TABLE ID OF THE TABLE YOU WISH TO PROCESS ==>  ________

--------------------------------------------------------------------------------
 PF1= HELP           PF3= PREV SCREEN   PF5= MAIN MENU        PF12= END
```

Personnel Local Tables Menu (PERLOCAL)

DESCRIPTION AND EXECUTION

The Personnel Local Tables Menu (PERLOCAL) is used to select a personnel local table to be viewed or updated. The listing of tables is displayed on multiple screens. You may move forward through the table list by pressing **ENTER**. When you locate the ID and description of the table you want to view or modify, type the ID in the blank provided at the bottom right corner of the screen and press **ENTER** one more time.

When you select a table, the first entry is displayed on the screen appropriate for the table selected. You now have six functions available for your use when viewing or modifying this table: add a new entry to the table (A=Add), view multiple table entries on a single screen (B=Browse), change an existing table entry (C=Change), delete an existing table entry (D=Delete), view the next table entry (N=Next), and retrieve information regarding an existing table entry (R=Retrieve).

<u>Steps to Reach Personnel Local Tables Menu</u>

1. At the Main Menu, select **1** - Personnel.
2. At the Personnel Main Menu, select **5** - Tables Maintenance.
3. At the Personnel Tables Menu, select **2** - Local Tables Maintenance.

USER INPUT

There are two types of personnel tables: Core tables and Local tables. The Core tables are developed and maintained centrally. The Local tables are populated and maintained locally by each installation. The following is a list of all the local tables.

ID	NAME	DESCRIPTION
TADMINLV	Administrative Level	NPPS uses this table to validate the Administrative Level field.
TAWDBDGT	Award Budget Code	NPPS uses this table to validate the Award Budget Code field.
TCMPAREA	Competitive Area	NPPS uses this table to generate a Competitive Area from the Duty Station to be used by the Retention Register (Core Report 252).
TEMPIND	Employee Indicator	NPPS uses this table to validate the Employee Indicator field.
TFACILTY	Facility Code	NPPS uses this table to validate the Facility Code and to generate the Facility data needed for NPPS Core Reports.
TFINSTM	Financial Statement Code	NPPS uses this table to validate the Financial Statement Code field.
TFOLLOW	Follow Up Code	NPPS uses this table to validate the Follow Up Code field and then provide its corresponding description.
TORG	Organization Code	NPPS uses this table to validate the Organization Assigned and Organization Located fields, as well as to retrieve the titles for these codes.
TPOSCRIT	Position Criticality	NPPS uses this table to validate the Position Criticality field.
TPOSTYPL	Position Type Local	NPPS uses this table to validate the Position Type Local field.
TPRJLINE	Project Line Item	NPPS uses this table to validate the Project Line Item field.
TREQFLD	Required Field	NPPS uses this table to allow optional fields on personnel action screens to be changed to required fields.

ID	NAME	DESCRIPTION
TRTDGRP	RTDGRP	NPPS uses this table to validate the Random Testing Designator Group (RTDGRP) field.
TSF50BLK	SF 50 Block Number	NPPS uses this table to allow for data fields or literals to be defined for default printing in blocks 41, 42, 43, or 44 of the SF 50.
TSIGNAT	SF 50 Signature	NPPS uses this table to validate the local values for SF 50 Signature Code, as well as to look up the name and title of the person required to sign the SF 50.
TTITLE	Title Table	NPPS uses this table to generate Title: NASA, Title: OPM, and Title: Local.
TTRNDEV	Training/Dev Program	NPPS uses this table to validate the Training/Dev Program field.

DESCRIPTION OF DATA PROCESSING RESULTS AND OUTPUT

Following is a four-screen example of the table maintenance process. Select **TFOLLOW** from the Personnel Local Tables.

```
* NO MORE TABLE IDS TO DISPLAY (TO REPEAT THE LIST, HIT ENTER)

COMMAND: ________                    NPPS
NEO5020             PERSONNEL LOCAL TABLES MENU - PERLOCAL

  TABLE         TABLE                        TABLE         TABLE
   ID        DESCRIPTION                      ID        DESCRIPTION
 --------    ------------------           --------     ------------------

 TADMINLV    ADMIN. LEVEL                 TAWDBDGT     AWARD BUDGET CODE
 TCMPAREA    COMPETITIVE AREA             TEMPIND      EMPLOYEE INDICATOR
 TFACILTY    FACILITY CODE                TFOLLOW      FOLLOW UP CODE
 TORG        ORGANIZATION TABLE           TPOSCRIT     POSITION CRITERIA
 TPOSTYPL    POSITION TYPE LOC            TPRJLINE     PROJECT LINE ITEM
 TREQFLD     REQUIRED FIELD TBL           TRTDGRP      RANDOM TEST GROUP
 TSF50BLK    SF50 BLOCK                   TSIGNAT      SF50 SIGNATURE
 TTITLE      TITLES TABLE                 TTRNDEV      TRAINING/DEV PGM


ENTER THE TABLE ID OF THE TABLE YOU WISH TO PROCESS ==>  TFOLLOW_

--------------------------------------------------------------------------------
 PF1= HELP           PF3= PREV SCREEN   PF5= MAIN MENU        PF12= END
```

Selection of TFOLLOW on the Personnel Tables Menu

The next screen shows the first entry for this table.

```
COMMAND: ________                    NPPS
NEO5120                     FOLLOW UP CODE - TFOLLOW
--------------------------------------------------------------------------------



 FUNCTION: B            FOLLOW UP CODE:  AA


 REMARKS:  MATERNITY LEAVE END_____________________________________

           ____________________________________________________




--------------------------------------------------------------------------------
 FUNCTIONS:  A= ADD  B= BROWSE   C= CHANGE   D= DELETE   N= NEXT   R= RETRIEVE
 PF1= HELP           PF3= PREV SCREEN   PF5= MAIN MENU        PF12= END
```

Follow Up Code

The third screen shows the use of the browse function to display a list of multiple table entries. Notice that the table entry "Excused Leave End" has been marked with an "X" to indicate that the record is to be changed.

```
* TO CHANGE A RECORD, PLACE AN 'X' ON THAT LINE AND HIT ENTER

COMMAND: ________                    NPPS
NEO5198                    FOLLOW UP CODE TABLE BROWSE
-------------------------------------------------------------------------------

     BEGINNING  FOLLOW UP CODE  DD00000001

SEL  FOLLOW UP CODE          REMARKS

 _   AA             MATERNITY LEAVE END

 _   BB             MILITARY LEAVE END

 X   CC             EXCUSED LEAVE END

 _   DD             LEAVE END

 _

-------------------------------------------------------------------------------
 PF1= HELP           PF3= PREV SCREEN   PF5= MAIN MENU        PF7= BACKWARD
 PF8= FORWARD        PF12= END
```

Browse Follow Up Code

The final screen displays the "Excused Leave End" entry for the Follow-Up Code Table.

```
COMMAND: ________                    NPPS
NEO5120                    FOLLOW UP CODE - TFOLLOW
-------------------------------------------------------------------------------


 FUNCTION: B           FOLLOW UP CODE:  CC


 REMARKS:  EXCUSED LEAVE END_____________________________________

           ____________________________________________________





-------------------------------------------------------------------------------
 FUNCTIONS:  A= ADD  B= BROWSE   C= CHANGE   D= DELETE   N= NEXT   R= RETRIEVE
 PF1= HELP           PF3= PREV SCREEN   PF5= MAIN MENU        PF12= END
```

Excused Leave End

INTERRELATIONSHIPS

NPPS requires you to enter a default hierarchical structure for the organizations at your installation. You enter this default structure in a field called "Org Hierarchical Structure" on the Personnel Processing Control template. After you establish a structure, NPPS uses this structure to look up organization names for printing SF 50s.

For example, if the employee's Organization Assigned Code is FD321 and the default value for the hierarchical structured organization is A111, NPPS will generate the following Organization Assigned Codes by substituting the employee's Organization Assigned Code into the default structure. The accompanying Organization Titles will be printed on the SF 50.

Given:

Default Value for Hierarchical Structured Org	A111
Employee's Organization Assigned Code	FD321

NPPS generates:

Mission Support Directorate	FA111
Data Processing Systems Division	FD111
Communications Branch	FD311
Network Section	FD321

If you want to change the organization name by overriding the default structure, you may do so in any or all four levels for the user-specified Organization Assigned Code. You enter the override through the TORG table.

```
COMMAND:  _______                    NPPS
NEO5131                    ORGANIZATION TABLE - TORG
-------------------------------------------------------------------------------



 FUNCTION:  C        ORGANIZATION CODE: AH000



  DESCRIPTION: NPPS ORG TABLE 4_______________________


  SF50 NON-STUCTURED INDICATOR: X        ORG(S) TO PRINT ON SF50: AA111
                                                                  AH111
                                                                  AH711


-------------------------------------------------------------------------------
FUNCTIONS:  A= ADD   B= BROWSE   C= CHANGE   D= DELETE   N= NEXT   R= RETRIEVE
 PF1= HELP           PF3= PREV SCREEN   PF5= MAIN MENU        PF12= END
```

Organization Table (TORG)

In the example displayed in the Organization Table (TORG) screen, NPPS will override default value of A111 when it looks up the employee's Organization Assigned Code, AH000, and discovers that you have specified the organizations which should print on the SF 50 in the TORG table under Organization Code AH000. NPPS will then override organizations displayed above (AA111, AH111, and AH711) to the designated Organization Titles which should be printed on the SF 50. The following titles would be printed on the SF 50 based on the non-structured organization displayed in the above figure.

Given:

Employee's Organization Assigned Code	AH000

NPPS generates:

NPPS Directorate	AA111
Personnel Systems Division	AH111
SF 50 Branch	AH711
Organization Title Section	AH000

CHANGING FIELD ATTRIBUTES IN PERACT USING TREQFLD

To change a field's attribute from optional to required (or vice versa), first retrieve the appropriate personnel action screen by NOAC.

```
COMMAND: ________                    NPPS
 NEO5182          INSTALLATION REQUIRED FIELDS TABLE - TREQFLD
-------------------------------------------------------------------------------
               FUNCTION: R         NOAC: 001__         SCREEN: A
 _ BIRTH DATE                NAME (LAST, FIRST)        NOAC NTE
 _ NOAC2                   _ NOAC2 NTE               _ AUTH1
 _ AUTH2                   _ OPM TTL                 _ TITLE CODE
 _ NASA TTL                _ PDN                     _ NCC
 _ SUPIND                  _ PAY PLAN                _ OCC CODE
 _ GRADE                   _ STEP                    _ PAYBASIS





                        R= REQUIRED  BLANK= OPTIONAL
-------------------------------------------------------------------------------
FUNCTIONS:  C= CHANGE  N= NEXT  R= RETRIEVE
 PF1= HELP          PF3= PREV SCREEN          PF5= MAIN MENU          PF12= END
```

Retrieve Screen By NOAC

Using the Change (C) function, enter an R next to the desired field to change the field's attribute to required. Enter a "blank" to change the attribute to optional. You will only be able to enter a value beside fields that are defined as optional input for the NOAC specified.

```
COMMAND: ________                    NPPS
 NEO5182          INSTALLATION REQUIRED FIELDS TABLE - TREQFLD
-------------------------------------------------------------------------------
               FUNCTION: c         NOAC: 001__         SCREEN: A
 _ BIRTH DATE                NAME (LAST, FIRST)        NOAC NTE
 _ NOAC2                   _ NOAC2 NTE                 AUTH1
 R AUTH2                   _ OPM TTL                 _ TITLE CODE
 _ NASA TTL                _ PDN                     _ NCC
 _ SUPIND                  _ PAY PLAN                _ OCC CODE
 _ GRADE                  _ STEP                    _ PAYBASIS





                        R= REQUIRED  BLANK= OPTIONAL
-------------------------------------------------------------------------------
FUNCTIONS:  C= CHANGE  N= NEXT  R= RETRIEVE
 PF1= HELP          PF3= PREV SCREEN          PF5= MAIN MENU          PF12= END
```

Change Function

Press **ENTER** to update the table.

```
 * 82XXXX001  A CHANGED IN TREQFLD TABLE


COMMAND: ________                      NPPS
 NEO5182          INSTALLATION REQUIRED FIELDS TABLE - TREQFLD
-------------------------------------------------------------------------------
               FUNCTION: R         NOAC: 001__         SCREEN: A
 _ BIRTH DATE                NAME (LAST, FIRST)        NOAC NTE
 _ NOAC2                   _ NOAC2 NTE               _ AUTH1
 R AUTH2                   _ OPM TTL                 _ TITLE CODE
 _ NASA TTL                _ PDN                     _ NCC
 _ SUPIND                  _ PAY PLAN                _ OCC CODE
 _ GRADE                   _ STEP                    _ PAYBASIS





                        R= REQUIRED  BLANK= OPTIONAL
-------------------------------------------------------------------------------
FUNCTIONS:  C= CHANGE  N= NEXT  R= RETRIEVE
  PF1= HELP          PF3= PREV SCREEN          PF5= MAIN MENU          PF12= END
```

Installation Required Fields Table

The AUTH2 field will now be required input for all NOAC 001 personnel actions.

4.1.5.3 ACI Menu

```
COMMAND: ________                    NPPS
NEM8000                            ACI MENU  - ACIMENU
--------------------------------------------------------------------------------



                ENTER ONE OF THE FOLLOWING SELECTIONS: _


                          1 - ACI

                          2 - GM ACI





--------------------------------------------------------------------------------
 PF1= HELP                  PF5= MAIN MENU                    PF12= END
```

ACI Menu (ACIMENU)

DESCRIPTION AND EXECUTION

The ACI Menu (ACIMENU) is used to select one of two options, as illustrated in Figure 4.1.7-1.

1. ACI: Apply an ACI to the suspense file.
2. GM ACI: Apply an ACI to the suspense file for GM employees.

<u>Steps to Reach the ACI Menu</u>

1. At the Main Menu, select **1** - Personnel.
2. At the Personnel Main Menu, select **6** - ACI.

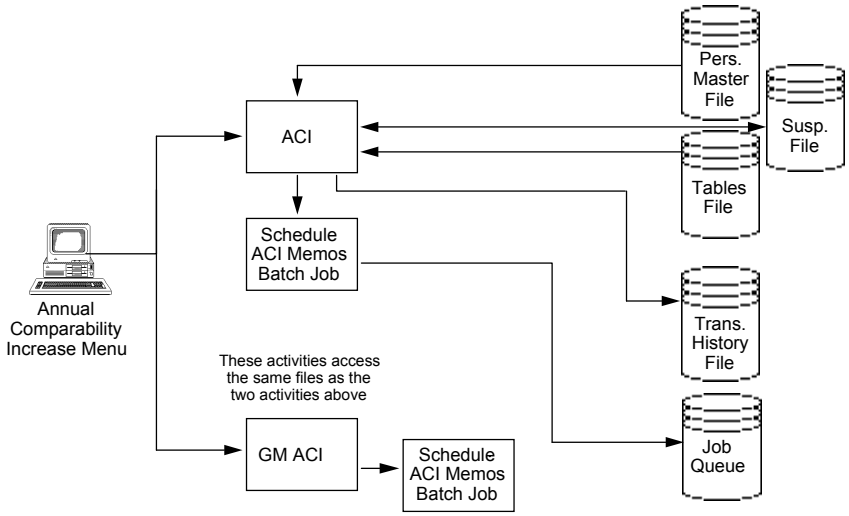

Figure 4.1.6 - 1 ACI

4.1.5.4 ACI

```
COMMAND: ________                    NPPS
NEM8001          ANNUAL COMPARABILITY INCREASE - ACI (894)
-------------------------------------------------------------------------------

  AUTH1:  ___  ___________________________________      EFDATE: 4_ 20 92
  AUTH2:  ___  ___________________________________

PAYTBL              GRADE                 PAYTBL             GRADE

  ___   __ __ __ __ __ __ __ __ __ __       ___   __ __ __ __ __ __ __ __ __ __
  ___   __ __ __ __ __ __ __ __ __ __       ___   __ __ __ __ __ __ __ __ __ __
  ___   __ __ __ __ __ __ __ __ __ __       ___   __ __ __ __ __ __ __ __ __ __
  ___   __ __ __ __ __ __ __ __ __ __       ___   __ __ __ __ __ __ __ __ __ __
  ___   __ __ __ __ __ __ __ __ __ __       ___   __ __ __ __ __ __ __ __ __ __


PRINT MEMO IN LIEU OF SF50: _          PERFORM UPDATES IN BATCH:  _ (Y/N)

-------------------------------------------------------------------------------
 PF1= HELP                  PF5= MAIN MENU                    PF12= END
```

Annual Comparability Increase (ACI)

DESCRIPTION AND EXECUTION

The Annual Comparability Increase (ACI) template is used to apply an ACI to the suspense file for a regular employee (i.e., all employees who are not on Retained Grade, Retained Pay, or Re-employed Annuitant). You identify all new base salary amounts for all Pay Table, Grade, and Step combinations. No unmatured actions that modify salary may be suspended before the execution of ACI due to salary tables not being updated at the time the actions are created.

<u>Steps to Reach ACI Template</u>

1. At the Main Menu, select **1** - Personnel.
2. At the Personnel Main Menu, select **6** - ACI.
3. At the ACI Menu, select **1** - ACI.

USER INPUT

The following procedure is recommended for the processing of ACI.

1. Verify that no actions causing EMPL-ADJSTD-BASIC-PAY to be recomputed (i.e., 702, 893, 895) are on the suspense file.
2. Verify that the applicable tables (i.e., Salary (TSALSTEP) and Authority Code (TAUTH)) were loaded as part of the Leave Year-End release.
3. Enter the Authorizations, Effective Date, Pay Tables Codes, and Grades.
4. (Optional) Enter **Y** in the Print Memo In Lieu of SF 50 field in order to select memos instead of SF 50s. As a result of this selection, a batch job will automatically be scheduled and placed in a Hold status to print memos.
5. Run ACI online by pressing **ENTER** after you have typed in the required information.
6. Run ACI in batch by entering **Y** in Perform Updates in Batch field.
7. Mature ACI via the online or batch mature capability.
8. SF 50s can be printed before or after the mature using the SF 50 Print Selection (SEL50) capability for those actions which did not have a memo printed.

DESCRIPTION OF DATA PROCESSING AND OUTPUT

The ACI procedure can only be used for employees with the Pay Rate Determinant 0, 5, 6, 7, and M. These employees must also have an assigned pay table (not blank). Finally, the Duty Status of employees to receive ACI must not be "Z" or blank. Other types of employees are done individually online, i.e., Retained Grade, Retained Pay, or Re-employed Annuitant (Annuitant Indicator which is 1, 4, 5, A, C, or E).

ACI actions are not edited until the mature process is executed. Actions which are in error will not mature. When this happens, NPPS provides messages on the Transaction Summary screen or on the Mature Transaction and Error Report (Core Report 358), which state specific actions that are in error and consequently were not matured.

ACI actions which do not mature because of errors remain on the suspense file. In order to correct the actions, a change function must be performed from the PERACT menu to correct the data before the mature is attempted again.

INTERRELATIONSHIPS

You may wish to check your Personnel Master file for erroneous data using SUPER NATURAL to ensure employees are on correct pay table and pay rate determinant before you run ACI.

4.1.5.5 GM ACI

```
COMMAND: ________                    NPPS
NEM8100         GM ANNUAL COMPARABILITY INCREASE - GMACI (894)
-------------------------------------------------------------------------------

                    EFDATE:  __ __ __          PAYTBL:  ___


                AUTH1:  ___  ____________________________________
                AUTH2:  ___  ____________________________________

           GRADE        OLD BASIC MIN        OLD BASIC MAX
              __           ___________          ___________
              __           ___________          ___________
              __           ___________          ___________


     PRINT MEMO IN LIEU OF SF50:  _         PERFORM UPDATES IN BATCH:  _ (Y/N)

-------------------------------------------------------------------------------
 PF1= HELP                       PF5= MAIN MENU                      PF12= END
_
```

GM Annual Comparability Increase (GMACI)

DESCRIPTION AND EXECUTION

The GM Annual Comparability Increase (GMACI) template is used to apply an ACI to the suspense file for a GM employee. No unmatured actions that modify salary may be suspended before the execution of GM ACI due to salary tables not being updated at the time the actions are created.

<u>Steps to Reach GM ACI</u>

1. At the Main Menu, select **1** - Personnel.
2. At the Personnel Main Menu, select **6** - ACI.
3. At the ACI Menu, select **2** - GM ACI.

USER INPUT

The following procedure is recommended for the processing of GM ACI.

1. Verify that no actions causing EMPL-ADJSTD-BASIC-PAY to be recomputed (i.e., 702, 891, 893, 895) are on the suspense file.
2. Verify that the applicable tables (i.e., Salary (TSALSTEP) and Authority Code (TAUTH)) were loaded as part of the Leave Year-End Process.
3. Enter the Authorizations, Effective Date, Pay Tables Codes, and Grades, Old Basic Minimum and Old Basic Maximum values for appropriate pay tables and grades.
4. (Optional) Enter **Y** in the Print Memo In Lieu of SF 50 field in order to select memos instead of SF 50s. As a result of this selection, a batch job will automatically be scheduled and placed in a Hold status to print memos.

5. Run GM ACI online by pressing **ENTER** after you have typed in the required information.
6. Run GM ACI in batch by entering **Y** in Perform Updates in Batch field.
7. Mature GM ACI via the online or batch mature capability.
8. SF 50s can be printed before or after the mature using the SF 50 Print Selection (SEL50) capability for those actions which did not have a memo printed.

DESCRIPTION OF DATA PROCESSING AND OUTPUT

The GM ACI procedure can only be used for employees with the Pay Rate Determinant 0, 5, 6, 7, and M. These employees must also have an assigned pay table (not blank). Finally, the Duty Status of employees to receive GM ACI must not be "Z" or blank. Other types of employees are done individually online; i.e., Retained Grade, Retained Pay, or Re-employed Annuitant (Annuitant Indicator which is 1, 4, 5, A, C, or E).

GM ACI actions are not edited until the mature process is executed. Actions which are in error will not mature. When this happens, NPPS provides messages on the Transaction Summary screen or on the Mature Transaction Error Report (Core Report 358), which state specific actions that are in error and consequently were not matured.

GM ACI actions which do not mature because of errors remain on the suspense file. In order to correct the actions, a change function must be performed from the PERACT menu to correct the data before the mature is attempted again.

4.1.6 Mass Actions Menu

```
COMMAND: ________                    NPPS
NEO9000                  MASS ACTIONS MENU - MASACT
-------------------------------------------------------------------------------

                    ENTER ONE OF THE FOLLOWING SELECTIONS: __

     1 - MASS TRANSFER                      10 - CHANGE ORGANIZATION NAME
     2 - FURLOUGH NOT-TO-EXCEED             11 - CHANGE IN NASA CLASS CODE
     3 - FURLOUGH                           12 - CHANGE IN FEHB
     4 - MILITARY FURLOUGH                  13 - TSP CHANGE
     5 - EXTENSION OF FURLOUGH              14 - LOCALITY PAYMENT
     6 - REALIGNMENT                        15 - CHANGE IN APPROPRIATION
     7 - MASS AWARD                         16 - MASS MISCELLANEOUS
     8 - CHG IN DUTY STATION                17 - MASS RETURN TO DUTY
     9 - PERFORMANCE RATING

-------------------------------------------------------------------------------
 PF1= HELP                        PF5= MAIN                        PF12= END
```

Mass Actions Menu (MASACT)

DESCRIPTION AND EXECUTION

The Mass Actions Menu (MASACT) is used to generate suspended personnel transactions for a group of employees you define for Mass Transfers (NOAC 352), Furloughs (NOACs 471, 472, 473, and 772), Realignment (NOAC 790), Awards, Performance Rating (NOAC 990), NCC (NOAC 920), Change in Organization Name (NOAC 925), Change in FEHB (NOAC 942), TSP Change (NOAC 943), Change in Duty Station (NOAC 792), Change in Locality Payment (NOAC 895), Change in Appropriation (NOAC 954), and Mass Miscellaneous (NOAC 991), and Return to Duty (NOAC 292) as illustrated in Figure 4.1.8-1.

<u>Steps to Reach Mass Actions Menu</u>

1. At the Main Menu, select **1** - Personnel.
2. At the Personnel Main Menu, select **7** - Mass Actions.

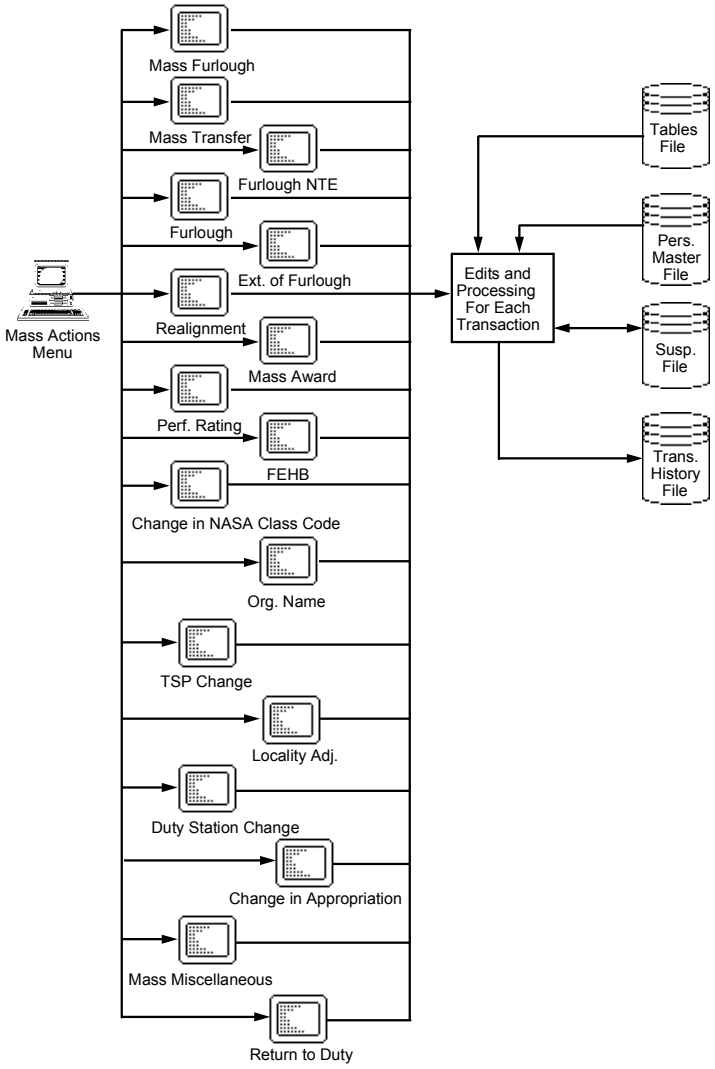

Figure 4.1.71 Mass Actions

DESCRIPTION OF DATA PROCESSING AND OUTPUT

Mass actions are not edited until the Mature process is executed. Actions which are in error will not mature. When this happens, NPPS provides messages on the Transaction Summary screen which state specific actions are in error and consequently were not matured.

Mass actions which do not mature because of errors remain on the suspense file. In order to correct the actions, remove them from the suspense file using the Mass Deletion of Suspended Actions capability. This capability is option number 4 on the Personnel Actions Main Menu (PERMAIN). Then correct the errors and re-enter the affected actions.

The alternative to deleting the actions which are in error is retrieving each action individually and correcting it online.

Whenever a mass action is added to the suspense file with an effective date earlier than pre-existing suspended SF 50 actions for an employee, the pre-existing SF 50 actions will be set to error status. The identification of the pre-existing SF 50 actions will be displayed after the mass transaction is processed.

4.1.6.1 Mass Transfer

```
COMMAND: ________                    NPPS
NEM9010              MASS TRANSFER - MTRANSFR (NOAC 352)
--------------------------------------------------------------------------------
 EFDATE: __ __ __     DEPART DEST: _       DEPART REASON: _   TRANS TO: ____
 AUTH1: ___                                AUTH2: ___
 ____________________                       ______________________
 ___________________________________        ____________________________________
SF 50 REMARKS:             SF 50 SIGNATURE: 1
 ___  ____________________________________________________________________________
 ___  ____________________________________________________________________________
 ___  ____________________________________________________________________________
 ___  ____________________________________________________________________________
 SSNS:
 ___ __ ____     ___ __ ____      ___ __ ____     ___ __ ____      ___ __ ____
 ___ __ ____     ___ __ ____      ___ __ ____     ___ __ ____      ___ __ ____
 ___ __ ____     ___ __ ____      ___ __ ____     ___ __ ____      ___ __ ____
 ___ __ ____     ___ __ ____      ___ __ ____     ___ __ ____      ___ __ ____
 ___ __ ____     ___ __ ____      ___ __ ____     ___ __ ____      ___ __ ____
 ___ __ ____     ___ __ ____      ___ __ ____     ___ __ ____      ___ __ ____
--------------------------------------------------------------------------------
 PF1= HELP                       PF5= MAIN MENU                     PF12= END
```

Mass Transfer (MTRANSFR)

DESCRIPTION AND EXECUTION

The Mass Transfer (MTRANSFR) template is used to generate a suspended Transfer (NOAC 352) for each employee you specify.

<u>Steps to Reach Mass Transfer</u>

1. At the Main Menu, select **1** - Personnel.
2. At the Personnel Main Menu, select **7** - Mass Actions.
3. At the Mass Actions Menu, select **1** - Mass Transfer.

DESCRIPTION OF DATA PROCESSING RESULTS AND OUTPUT

NPPS sets the Separation Date of each employee to the Effective Date of the action and the Duty Status of each employee to a terminated status (Duty Status = "Z"). NPPS also identifies the source of each generated transaction as being from the Mass Transfer process.

4.1.6.2 Furlough Not-to-Exceed

```
COMMAND: ________                    NPPS
NEO9020            MASS FURLOUGH NTE - MFURNTE (NOAC 472)
--------------------------------------------------------------------------------
 EFDATE: __ __ __          DTYSTS: _       FURLOUGH NTE: __ __ __
 AUTH1: ___                                AUTH2: ___
  ________________________                  ________________________
  ____________________________________      ____________________________________
 PRINT MEMO: _ (N,Y)
 REMARKS:                  SF 50 SIGNATURE: 1
  ___  ____________________________________________________
  ___  ____________________________________________________
 ORGANIZATION: ASSIGNED (RANGE) FROM: _____ TO: _____
 SSNS:
  ___ __ ____     ___ __ ____     ___ __ ____     ___ __ ____     ___ __ ____
  ___ __ ____     ___ __ ____     ___ __ ____     ___ __ ____     ___ __ ____
  ___ __ ____     ___ __ ____     ___ __ ____     ___ __ ____     ___ __ ____
  ___ __ ____     ___ __ ____     ___ __ ____     ___ __ ____     ___ __ ____
--------------------------------------------------------------------------------
 PF1= HELP                      PF5= MAIN MENU                      PF12= END
```

Mass Furlough Not-to-Exceed (MFURNTE)

DESCRIPTION AND EXECUTION

The Mass Furlough NTE (MFURNTE) template is used to generate a suspended Furlough NTE (NOAC 472) action and to change the Furlough NTE date for each employee selected based on user input (i.e., all employees whose Duty Status is equal to D, F, X, or Y and Work Schedule code is equal to P, F, S, or T and whose Organization: Assigned matches or is within the range of the organizations "From and To" or SSNs specified). If no organizations or SSNs are specified, all employees who meet the criteria above will be selected. The Duty Status will be set equal to the Duty Status found in the employee's record if no Duty Status is input.

<u>Steps to Reach Mass Furlough Not-to-Exceed</u>

1. At the Main Menu, select **1** - Personnel.
2. At the Personnel Main Menu, select **7** - Mass Actions.
3. At the Mass Actions Menu, select **2** - Furlough Not-to-Exceed.

DESCRIPTION OF DATA PROCESSING RESULTS AND OUTPUT

NPPS sets the source code to "F" for each generated transaction as being from the Furlough NTE (NOAC 472) action process. The Furlough NTE capability (472) generates a Memo in Lieu of an SF 50 if specified or an SF 50 (default). The Personnel in Lieu of SF 50 batch job will be scheduled if the Print Memo flag is set to "Y" at the time the actions are created.

4.1.6.3 Furlough

```
COMMAND: ________                    NPPS
NEO9030                MASS FURLOUGH - MFURLO (NOAC 471)
-------------------------------------------------------------------------------
 EFDATE: __ __ __
 AUTH1: ___                                  AUTH2: ___
  ________________________                    ________________________
  ____________________________________        ____________________________________
 PRINT MEMO: _ (N,Y)
 REMARKS:                  SF 50 SIGNATURE: 1
  ___  ____________________________________________________
  ___  ____________________________________________________
 ORGANIZATION: ASSIGNED (RANGE) FROM: _____ TO: _____
 SSNS:
  ___ __ ____     ___ __ ____     ___ __ ____     ___ __ ____     ___ __ ____
  ___ __ ____     ___ __ ____     ___ __ ____     ___ __ ____     ___ __ ____
  ___ __ ____     ___ __ ____     ___ __ ____     ___ __ ____     ___ __ ____
  ___ __ ____     ___ __ ____     ___ __ ____     ___ __ ____     ___ __ ____
  ___ __ ____     ___ __ ____     ___ __ ____     ___ __ ____     ___ __ ____
  ___ __ ____     ___ __ ____     ___ __ ____     ___ __ ____     ___ __ ____
-------------------------------------------------------------------------------
 PF1= HELP                      PF5= MAIN MENU                      PF12= END
```

Mass Furlough (MFURLO)

DESCRIPTION AND EXECUTION

The Mass Furlough (MFURLO) template is used to generate a suspended Furlough (NOAC 471) for each employee selected based on user input (i.e., all employees whose Duty Status equals D, X, or Y and whose work schedule equals F, P, S, or T and whose Organization: Assigned matches or is within the range of the organizations "From and To" or SSNs specified). If no organizations or SSNs are specified, all employees who meet the criteria above will be selected.

<u>Steps to Reach Mass Furlough</u>

1. At the Main Menu, select **1** - Personnel.
2. At the Personnel Main Menu, select **7** - Mass Actions.
3. At the Mass Actions Menu, select **3** - Furlough.

DESCRIPTION OF DATA PROCESSING RESULTS AND OUTPUT

NPPS sets the source code to “F” for each generated transaction as being from the Furlough mass action process. The Mass Furlough capability (NOAC 471) generates a Memo in Lieu of a SF 50 if specified or a SF 50 (default). The Personnel in Lieu of SF 50 batch job will be scheduled if the Print Memo flag is set to "Y" at the time the actions are created.

4.1.6.4 Military Furlough

```
COMMAND: ________                    NPPS
NEO9040            MASS FURLOUGH MIL - MFURLMIL (NOAC 473)
-------------------------------------------------------------------------------

 EFDATE: __ __ __                          DTYSTS: _
 AUTH1: ___                                AUTH2: ___
 ________________________                   ________________________
 ____________________________               ____________________________________
SF 50 REMARKS:             SF 50 SIGNATURE: 1
 M72  ____________________________________________________________________
 ___  ____________________________________________________________________
 ___  ____________________________________________________________________
 ___  ____________________________________________________________________
 SSNS:
 ___ __ ____     ___ __ ____     ___ __ ____     ___ __ ____     ___ __ ____
 ___ __ ____     ___ __ ____     ___ __ ____     ___ __ ____     ___ __ ____
 ___ __ ____     ___ __ ____     ___ __ ____     ___ __ ____     ___ __ ____
 ___ __ ____     ___ __ ____     ___ __ ____     ___ __ ____     ___ __ ____
 ___ __ ____     ___ __ ____     ___ __ ____     ___ __ ____     ___ __ ____
 ___ __ ____     ___ __ ____     ___ __ ____     ___ __ ____     ___ __ ____

-------------------------------------------------------------------------------
 PF1= HELP                     PF5= MAIN MENU                     PF12= END
```

Mass Military Furlough (MFURLMIL)

DESCRIPTION AND EXECUTION

The Mass Military Furlough (MFURLMIL) template is used to change the effective date of duty status for up to 30 SSNs at one time and generate a suspended Furlough Military (NOAC 473) for each employee you specify.

Steps to Reach Mass Military Furlough

1. At the Main Menu, select **1** - Personnel.
2. At the Personnel Main Menu, select **7** - Mass Actions.
3. At the Mass Actions Menu, select **4** - Military Furlough.

DESCRIPTION OF DATA PROCESSING RESULTS AND OUTPUT

NPPS sets the source of each generated transaction as being from the Military Furlough mass action process.

4.1.6.5 Extension of Furlough

```
COMMAND: ________                        NPPS
NEO9050           MASS EXT FURLOUGH NTE - FEFURNTE (NOAC 772)
--------------------------------------------------------------------------------
 EFDATE: __ __ __          DTYSTS: _       FURLOUGH NTE: __ __ __
 AUTH1: ___                                AUTH2: ___
  ________________________                  ________________________
  ____________________________________      ____________________________________
 PRINT MEMO: _ (N,Y)
 REMARKS:                  SF 50 SIGNATURE: 1
  ___  ____________________________________________________
  ___  ____________________________________________________
 ORGANIZATION: ASSIGNED (RANGE) FROM: _____ TO: _____
 SSNS:
  ___ __ ____     ___ __ ____     ___ __ ____     ___ __ ____     ___ __ ____
  ___ __ ____     ___ __ ____     ___ __ ____     ___ __ ____     ___ __ ____
  ___ __ ____     ___ __ ____     ___ __ ____     ___ __ ____     ___ __ ____
  ___ __ ____     ___ __ ____     ___ __ ____     ___ __ ____     ___ __ ____
--------------------------------------------------------------------------------
 PF1= HELP                      PF5= MAIN MENU                      PF12= END
```

Mass Extension of Furlough NTE (MEFURNTE)

DESCRIPTION AND EXECUTION

The Mass Extension of Furlough NTE (MEFURNTE) template is used to generate a suspended Extension of Furlough NTE (NOAC 772) action and to change the Furlough NTE date for each employee selected based on user input (i.e., all employees whose Duty Status equal to D, F, X, or Y and Work Schedule Code is equal to P, F, S, or T and whose Organization: Assigned matches or is within the range of the organizations "From and To" or SSNs specified). If no organizations or SSNs are specified, all employees who meet the criteria above will be selected. The Duty Status will be set equal to the Duty Status found in the employee's record if no Duty Status is input.

<u>Steps to Reach Mass Extension of Furlough</u>

1. At the Main Menu, select **1** - Personnel.
2. At the Personnel Main Menu, select **7** - Mass Actions.
3. At the Mass Actions Menu, select **5** - Extension of Furlough.

DESCRIPTION OF DATA PROCESSING RESULTS AND OUTPUT

NPPS sets the source code to "F" for each generated transaction as being from the Extension of Furlough (NOAC 772) action process. The Extension of Furlough capability (772) generates a Memo in Lieu of an SF 50 if specified or an SF 50 (default). The Personnel in Lieu of SF 50 batch job will be scheduled if the Print Memo flag is set to "Y" at the time the actions are created.

4.1.6.6 Realignment

```
COMMAND: ________                    NPPS
NEO9060            MASS REALIGNMENT - MREALIGN (NOAC 790)
--------------------------------------------------------------------------------
 EFDATE: __ __ __       ORGANIZATION FROM: _____        ORGANIZATION TO: _ ____
 DUTY STATION: _________ ORG LOCATED FROM: _____         ORG LOCATED TO: _ ____
                              AGENCY CODE: ____         FACILITY: _
 AUTH1: ___                                AUTH2: ___
 ________________________                   ________________________
 ____________________________               ____________________________
 SF 50 REMARKS:       SF 50 SIGNATURE:  1             PRINT MEMO:  _ (N,Y)
 ___  ____________________________________________________________________
 ___  ____________________________________________________________________
 SSNS:
 ___ __ ____     ___ __ ____      ___ __ ____     ___ __ ____      ___ __ ____
 ___ __ ____     ___ __ ____      ___ __ ____     ___ __ ____      ___ __ ____
 ___ __ ____     ___ __ ____      ___ __ ____     ___ __ ____      ___ __ ____
 ___ __ ____     ___ __ ____      ___ __ ____     ___ __ ____      ___ __ ____
--------------------------------------------------------------------------------
 PF1= HELP                      PF5= MAIN MENU                      PF12= END
```

Mass Realignment (MREALIGN)

DESCRIPTION AND EXECUTION

The Mass Realignment (MREALIGN) template is used to generate a suspended Realignment (NOAC 790) for each employee you specify who meets the selection criteria (i.e., the employee must currently be assigned to the Organization Assigned that you specify and located in the Organization Located that you specify). If no SSNs are specified, all employees whose Facility Code matches the Facility Code entered, whose Organization: Assigned matches Assigned From, and whose Organization: Located matches Located From will have an action generated. If Facility Code is left blank, all employees who match the user specified criteria will have an action generated. Optionally, the user may enter a period in the Org Located To field to blank out the Organization: Located for employees who match the user specified criteria.

<u>Steps to Reach Mass Realignment</u>

1. At the Main Menu, select **1** - Personnel.
2. At the Personnel Main Menu, select **7** - Mass Actions.
3. At the Mass Actions Menu, select **6** - Realignment.

DESCRIPTION OF DATA PROCESSING RESULTS AND OUTPUT

NPPS sets the source of each generated transaction as being from the Realignment mass process. The Mass Realignment capability (790) generates a Memo in Lieu of an SF 50 if specified or an SF 50 (default). The Personnel in Lieu of SF 50 batch job will be scheduled if the Print Memo flag is set to "Y" at the time the actions are created.

4.1.6.7 Mass Award

```
COMMAND: ________                    NPPS
NEO9070                       MASS AWARD - MAWARD
-------------------------------------------------------------------------------
 NOAC: ______     EFDATE: __ __ __
 AWDYR: __        AWDTYP: _            AWDCHK: _
                  GROUP TEXT: ________________________________
 AUTH1: ___                                  AUTH2: ___
 ________________________                     ________________________
 ____________________________________         ____________________________________
 SF 50 REMARKS:             SF 50 SIGNATURE: _        AWARD BUDGET: ________
 ___  ____________________________________________________________________________
 ___  ____________________________________________________________________________
    SSN        AWDAMT          SSN        AWDAMT          SSN        AWDAMT
 ___ __ ____  ________      ___ __ ____  ________      ___ __ ____  ________
 ___ __ ____  ________      ___ __ ____  ________      ___ __ ____  ________
 ___ __ ____  ________      ___ __ ____  ________      ___ __ ____  ________
 ___ __ ____  ________      ___ __ ____  ________      ___ __ ____  ________
 ___ __ ____  ________      ___ __ ____  ________      ___ __ ____  ________
 ___ __ ____  ________      ___ __ ____  ________      ___ __ ____  ________
-------------------------------------------------------------------------------
 PF1= HELP                        PF5= MAIN                        PF12= END
```

Mass Award (MAWARD)

DESCRIPTION AND EXECUTION

The Mass Award (MAWARD) template is used to generate a suspended award action for each employee you specify who also meets the selection criteria.

<u>Steps to Reach Mass Award</u>

1. At the Main Menu, select **1** - Personnel.
2. At the Personnel Main Menu, select **7** - Mass Actions.
3. At the Mass Actions Menu, select **7** - Mass Award.

DESCRIPTION OF DATA PROCESSING RESULTS AND OUTPUT

NPPS checks that the NOAC entered is an award action and identifies the source of each generated transaction as being from the Award mass process. Time Off awards cannot be processed through mass actions. On the Spot awards may be processed through mass actions, but the gross amount must be entered.

4.1.6.8 Change in Duty Station

```
COMMAND: ________                    NPPS
NEO9140        MASS CHANGE IN DUTY STATION - MDTYSTN (NOAC 792)
-------------------------------------------------------------------------------
 EFDATE:  __ __ __    DUTY STATION FROM:  _________    ORG ASSIGNED:  _____
                      DUTY STATION TO:  _________
 AUTH1:  ___                            AUTH2:  ___
 _________________________              _________________________
 ____________________________           ____________________________________
 SF 50 REMARKS:         SF 50 SIGNATURE:  _            PRINT MEMO:  _  (N,Y)
 ___  ____________________________________________________________________
 ___  ____________________________________________________________________
 ___  ____________________________________________________________________
 SSNS:
 ___ __ ____     ___ __ ____     ___ __ ____     ___ __ ____     ___ __ ____
 ___ __ ____     ___ __ ____     ___ __ ____     ___ __ ____     ___ __ ____
 ___ __ ____     ___ __ ____     ___ __ ____     ___ __ ____     ___ __ ____
 ___ __ ____     ___ __ ____     ___ __ ____     ___ __ ____     ___ __ ____
 ___ __ ____     ___ __ ____     ___ __ ____     ___ __ ____     ___ __ ____
 ___ __ ____     ___ __ ____     ___ __ ____     ___ __ ____     ___ __ ____
-------------------------------------------------------------------------------
 PF1= HELP                    PF5= MAIN MENU                        PF12= END
```

Mass Change in Duty Station (MDTYSTN)

DESCRIPTION AND EXECUTION

The Mass Change in Duty Station (MDTYSTN) template is used to generate a suspended Change in Duty Station (NOAC 792) for each employee you specify. If no SSNs are specified, all employees whose Duty Station From or Organization: Assigned (select by any level of organization) matches the user specified criteria will have an action generated. If no Organization or Duty Station or SSNs are specified, all employees will be selected.

<u>Steps to Reach Mass Change in Duty Station</u>

1. At the Main Menu, select **1** - Personnel.
2. At the Personnel Main Menu, select **7** - Mass Actions.
3. At the Mass Actions Menu, select **8** - Change in Duty Station.

DESCRIPTION OF DATA PROCESSING RESULTS AND OUTPUT

NPPS sets the source of each generated transaction as being from the Change in Duty Station mass action process.

4.1.6.9 Performance Rating

```
COMMAND: ________                    NPPS
NEO9090         MASS PERFORMANCE RATING - MPEFRAT (NOAC 990)
--------------------------------------------------------------------------------

                     EFDATE: __ __ __      YEAR: __   PATTERN: _

                  CURR                        CURR                      CURR
     SSN         RATING          SSN         RATING       SSN          RATING
 -----------     ------      -----------     ------   -----------     ------
 ___ __ ____       _         ___ __ ____      _       ___ __ ____       _
 ___ __ ____       _         ___ __ ____      _       ___ __ ____       _
 ___ __ ____       _         ___ __ ____      _       ___ __ ____       _
 ___ __ ____       _         ___ __ ____      _       ___ __ ____       _
 ___ __ ____       _         ___ __ ____      _       ___ __ ____       _
 ___ __ ____       _         ___ __ ____      _       ___ __ ____       _
 ___ __ ____       _         ___ __ ____      _       ___ __ ____       _
 ___ __ ____       _         ___ __ ____      _       ___ __ ____       _
 ___ __ ____       _         ___ __ ____      _       ___ __ ____       _
 ___ __ ____       _         ___ __ ____      _       ___ __ ____       _

--------------------------------------------------------------------------------
 PF1= HELP                   PF5= MAIN MENU                        PF12= END
```

Mass Performance Rating (MPEFRAT)

DESCRIPTION AND EXECUTION

The Mass Performance Rating (MPEFRAT) template is used to generate a suspended Performance Rating (NOAC 990) for each employee you specify who also meets the selection criteria. You may also input the performance rating and year received. NPPS automatically maintains performance rating and year received for three prior periods.

Steps to Reach Mass Performance Rating

1. At the Main Menu, select **1** - Personnel.
2. At the Personnel Main Menu, select **7** - Mass Actions.
3. At the Mass Actions Menu, select **9** - Performance Rating.

DESCRIPTION OF DATA PROCESSING RESULTS AND OUTPUT

NPPS identifies the source of each generated transaction as being from the Performance Rating mass process.

4.1.6.10 Change Organization Name

```
COMMAND: ________                    NPPS
NEO9100          MASS CHG IN ORGA NAME - MORGNAME (NOAC 925)
      ---------------------------------------------------------------------------
 EFDATE: __ __ __         ORG ASSIGNED: _____


 AUTH1: ___      _________________________
                 ____________________________________

 SF 50 SIGNATURE: 1               PRINT MEMO: _ (N,Y)

 SSNS:
 ___ __ ____     ___ __ ____      ___ __ ____      ___ __ ____      ___ __ ____
 ___ __ ____     ___ __ ____      ___ __ ____      ___ __ ____      ___ __ ____
 ___ __ ____     ___ __ ____      ___ __ ____      ___ __ ____      ___ __ ____
 ___ __ ____     ___ __ ____      ___ __ ____      ___ __ ____      ___ __ ____
 ___ __ ____     ___ __ ____      ___ __ ____      ___ __ ____      ___ __ ____
 ___ __ ____     ___ __ ____      ___ __ ____      ___ __ ____      ___ __ ____


---------------------------------------------------------------------------------
 PF1= HELP                  PF5= MAIN MENU                    PF12= END
```

Mass Change in Organization Name (MORGNAME)

DESCRIPTION AND EXECUTION

The Mass Change in Organization Name (MORGNAME) template is used to generate a suspended Change in Organization Name (NOAC 925) for each employee who meets the selection criteria (i.e., each employee who is currently assigned to the Organization Assigned Code for which the name is being changed). If no SSNs are specified, all employees whose Organization: Assigned matches Organization From will have an action generated. The new organization titles are retrieved from the TORG table based on the employee's Organization:Assigned. The TORG table should be updated with the new organization titles before a mass change in organization name is processed.

<u>Steps to Reach Change in Organization Name</u>

1. At the Main Menu, select **1** - Personnel.
2. At the Personnel Main Menu, select **7** - Mass Actions.
3. At the Mass Actions Menu, select **10** - Change Organization Name.

DESCRIPTION OF DATA PROCESSING RESULTS AND OUTPUT

NPPS identifies the source of each generated transaction as being from the Change Organization Name mass process. In addition, NPPS produces the NPPS Core report, Approved Action not Requiring an SF 50, for each employee personnel action generated.

4.1.6.11 Change in NASA Class Code

```
COMMAND: ________                    NPPS
NEO9110                MASS CHG IN NCC - MNCC (NOAC 920)
-------------------------------------------------------------------------------
 EFDATE: __ __ __                 NCC FROM: _____                NCC TO: _____
NASA TITLE TO: ____________________________________________________________
AUTH1: ___                                  AUTH2: ___
 ______________________                      ______________________
 ____________________________                ____________________________________
SF 50 REMARKS:             SF 50 SIGNATURE: 1
 ___  ____________________________________________________________________
 ___  ____________________________________________________________________
 ___  ____________________________________________________________________
 ___  ____________________________________________________________________
SSNS:
 ___ __ ____     ___ __ ____     ___ __ ____     ___ __ ____     ___ __ ____
 ___ __ ____     ___ __ ____     ___ __ ____     ___ __ ____     ___ __ ____
 ___ __ ____     ___ __ ____     ___ __ ____     ___ __ ____     ___ __ ____
 ___ __ ____     ___ __ ____     ___ __ ____     ___ __ ____     ___ __ ____
 ___ __ ____     ___ __ ____     ___ __ ____     ___ __ ____     ___ __ ____
-------------------------------------------------------------------------------
 PF1= HELP                     PF5= MAIN MENU                      PF12= END
```

Mass Change in NASA Class Code (MNCC)

DESCRIPTION AND EXECUTION

The Mass Change in NASA Class Code (MNCC) template is used to generate a suspended Change in NCC (NOAC 920) for each employee you specify who meets the selection criteria (i.e., employees who are currently assigned to the NCC that is being changed). If no SSNs are specified, all employees whose NASA Classification Code matches NCC From will have an action generated.

<u>Steps to Reach Mass Change in NASA Class Code</u>

1. At the Main Menu, select **1** - Personnel.
2. At the Personnel Main Menu, select **7** - Mass Actions.
3. At the Mass Actions Menu, select **11** - Change in NASA Class Code.

DESCRIPTION OF DATA PROCESSING RESULTS AND OUTPUT

NPPS will identify the source of each generated transaction as being from the Change in NCC mass process.

4.1.6.12 Change in FEHB

```
COMMAND: ________                    NPPS
NEO9120                MASS CHG IN FEHB - MFEHB (NOAC 942)
--------------------------------------------------------------------------------

                              EFDATE: __ __ __

                 FEHB                        FEHB                        FEHB
     SSN         PLAN            SSN         PLAN          SSN           PLAN
------------     -----       ------------    -----    ------------      -----
 ___ __ ____      ___         ___ __ ____     ___      ___ __ ____       ___
 ___ __ ____      ___         ___ __ ____     ___      ___ __ ____       ___
 ___ __ ____      ___         ___ __ ____     ___      ___ __ ____       ___
 ___ __ ____      ___         ___ __ ____     ___      ___ __ ____       ___
 ___ __ ____      ___         ___ __ ____     ___      ___ __ ____       ___
 ___ __ ____      ___         ___ __ ____     ___      ___ __ ____       ___
 ___ __ ____      ___         ___ __ ____     ___      ___ __ ____       ___
 ___ __ ____      ___         ___ __ ____     ___      ___ __ ____       ___
 ___ __ ____      ___         ___ __ ____     ___      ___ __ ____       ___
 ___ __ ____      ___         ___ __ ____     ___      ___ __ ____       ___


--------------------------------------------------------------------------------
 PF1= HELP                   PF5= MAIN MENU                        PF12= END
```

Mass Change in FEHB (MFEHB)

DESCRIPTION AND EXECUTION

The Mass Change in FEHB (MFEHB) template is used to generate a suspended Change in FEHB (NOAC 942) for each employee you specify who meets the selection criteria.

<u>Steps to Reach Mass Change in FEHB</u>

1. At the Main Menu, select **1** - Personnel.
2. At the Personnel Main Menu, select **7** - Mass Actions.
3. At the Mass Actions Menu, select **12** - Change in FEHB.

DESCRIPTION OF DATA PROCESSING RESULTS AND OUTPUT

NPPS will identify the source of each generated transaction as being from the Change in FEHB mass process.

4.1.6.13 TSP Change

```
COMMAND: ________                    NPPS
NEO9130              MASS TSP CHANGE - MTSP (NOAC 943)
-------------------------------------------------------------------------------
                              EFDATE: __ __ __

 SSN:

 ___ __ ____     ___ __ ____     ___ __ ____     ___ __ ____     ___ __ ____
 ___ __ ____     ___ __ ____     ___ __ ____     ___ __ ____     ___ __ ____
 ___ __ ____     ___ __ ____     ___ __ ____     ___ __ ____     ___ __ ____
 ___ __ ____     ___ __ ____     ___ __ ____     ___ __ ____     ___ __ ____
 ___ __ ____     ___ __ ____     ___ __ ____     ___ __ ____     ___ __ ____
 ___ __ ____     ___ __ ____     ___ __ ____     ___ __ ____     ___ __ ____
 ___ __ ____     ___ __ ____     ___ __ ____     ___ __ ____     ___ __ ____
 ___ __ ____     ___ __ ____     ___ __ ____     ___ __ ____     ___ __ ____
 ___ __ ____     ___ __ ____     ___ __ ____     ___ __ ____     ___ __ ____
 ___ __ ____     ___ __ ____     ___ __ ____     ___ __ ____     ___ __ ____
 ___ __ ____     ___ __ ____     ___ __ ____     ___ __ ____     ___ __ ____

-------------------------------------------------------------------------------
 PF1= HELP                   PF5= MAIN MENU                       PF12= END
```

Mass TSP Change (MTSP)

DESCRIPTION AND EXECUTION

The Mass TSP Change (MTSP) template is used to generate a suspended TSP Change (NOAC 943) for each employee you specify. It changes TSP status code to "Y," TSP status date to effective date, and TSP eligibility date to null.

<u>Steps to Reach Mass Military Furlough</u>

1. At the Main Menu, select **1** - Personnel.
2. At the Personnel Main Menu, select **7** - Mass Actions.
3. At the Mass Actions Menu, select **13** - TSP Change.

DESCRIPTION OF DATA PROCESSING RESULTS AND OUTPUT

NPPS will identify the source of each generated transaction as being from the TSP Change mass process.

4.1.6.14 Locality Payment

```
COMMAND: ________                    NPPS
NEO9080        MASS CHANGE IN LOCALITY ADJ - MLCLADJ (NOAC 895)
-------------------------------------------------------------------------------
 EFDATE: __ __ __

 DUTY STATION:  _________


 AUTH1:  ___                          AUTH2:  ___
 ________________________             ________________________
 ___________________________________  ___________________________________

 PRINT MEMO:  _ (Y/N)

 SF 50 REMARKS:         SF 50 SIGNATURE:  _

 ___  ____________________________________________________________________
 ___  ____________________________________________________________________
 ___  ____________________________________________________________________


-------------------------------------------------------------------------------
 PF1= HELP                    PF5= MAIN MENU                        PF12= END
```

Mass Locality Payment (MLCLADJ)

DESCRIPTION AND EXECUTION

The Mass Locality Payment (MLCLADJ) template is used to generate a suspended Locality Payment (NOAC 895) for each employee meeting the selection criteria (i.e., Duty Station).

<u>Steps to Reach Mass Locality Payment</u>

1. At the Main Menu, select **1** - Personnel.
2. At the Personnel Main Menu, select **7** - Mass Actions.
3. At the Mass Actions Menu, select **14** - Locality Payment.

DESCRIPTION OF DATA PROCESSING RESULTS AND OUTPUT

NPPS sets the source of each generated transaction as being from the Locality Payment mass process. The Mass Locality Payment generates a Memo in Lieu of an SF 50 if specified.

4.1.6.15 Change in Appropriation

```
COMMAND: ________                        NPPS
NEO9150            MASS CHANGE IN APPROP - MCHGAPP (NOAC 954)
-------------------------------------------------------------------------------
 EFDATE:  __ __ __         NEW PLI CODE:  __________

 AUTH1:  ___                              AUTH2:  ___
 ________________________                 ________________________
 ________________________________         ____________________________________
 SF 50 REMARKS:       SF 50 SIGNATURE:  1
 ___  ____________________________________________________________________
 ___  ____________________________________________________________________
 ___  ____________________________________________________________________
 SSN:
 ___ __ ____     ___ __ ____     ___ __ ____     ___ __ ____     ___ __ ____
 ___ __ ____     ___ __ ____     ___ __ ____     ___ __ ____     ___ __ ____
 ___ __ ____     ___ __ ____     ___ __ ____     ___ __ ____     ___ __ ____
 ___ __ ____     ___ __ ____     ___ __ ____     ___ __ ____     ___ __ ____
 ___ __ ____     ___ __ ____     ___ __ ____     ___ __ ____     ___ __ ____
 ___ __ ____     ___ __ ____     ___ __ ____     ___ __ ____     ___ __ ____
-------------------------------------------------------------------------------
 PF1= HELP                    PF5= MAIN MENU                        PF12= END
```

Mass Change in Appropriation (MCHGAPP)

DESCRIPTION AND EXECUTION

The Mass Change in Appropriation (MCHGAPP) template is used to generate a suspended Change in Appropriation (NOAC 954) for each employee specified.

<u>Step to Reach Mass Change in Appropriation</u>

1. At the Main Menu, select **1** - Personnel.
2. At the Personnel Main Menu, select **7** - Mass Actions.
3. At the Mass Actions Menu, select **15** - Change in Appropriation.

DESCRIPTION OF DATA PROCESSING RESULTS AND OUTPUT

NPPS sets the source of each generated transaction as being from the Change in Appropriation mass process.

4.1.6.16 Mass Miscellaneous

```
COMMAND: ________                    NPPS
NEO9160            MASS MISCELLANEOUS - MMISC (NOAC 991)
-------------------------------------------------------------------------------
 EFDATE:  __ __ __             (Place an 'X' by the field to be changed)

    _ ADMIN LEVEL             _ FINSTM                  _ POSCRIT
    _ PROJ PROMO              _ RTD                     _ RTD GROUP
    _ SUPIND                  _ TITLE CODE              _ TRAINING DEV PGM

      SSN    NEW VALUE            SSN    NEW VALUE            SSN    NEW VALUE
  ___ __ ____  _____          ___ __ ____  _____          ___ __ ____  _____
  ___ __ ____  _____          ___ __ ____  _____          ___ __ ____  _____
  ___ __ ____  _____          ___ __ ____  _____          ___ __ ____  _____
  ___ __ ____  _____          ___ __ ____  _____          ___ __ ____  _____
  ___ __ ____  _____          ___ __ ____  _____          ___ __ ____  _____
  ___ __ ____  _____          ___ __ ____  _____          ___ __ ____  _____
  ___ __ ____  _____          ___ __ ____  _____          ___ __ ____  _____
  ___ __ ____  _____          ___ __ ____  _____          ___ __ ____  _____
  ___ __ ____  _____          ___ __ ____  _____          ___ __ ____  _____
-------------------------------------------------------------------------------
 PF1= HELP                    PF5= MAIN MENU                        PF12= END
```

Mass Miscellaneous (MMISC)

DESCRIPTION AND EXECUTION

The Mass Miscellaneous (MMISC) template is used to generate a suspended Miscellaneous (NOAC 991) for each employee specified. The data element to be changed is selected by marking the desired field with an X. Only one data element may be selected. The appropriate new value must be entered for each SSN specified.

<u>Step to Reach Mass Miscellaneous</u>

1. At the Main Menu, select **1** - Personnel.
2. At the Personnel Main Menu, select **7** - Mass Actions.
3. At the Mass Actions Menu, select **16** - Mass Miscellaneous.

DESCRIPTION OF DATA PROCESSING RESULTS AND OUTPUT

NPPS sets the source of each generated transaction as being from the Miscellaneous mass process.

4.1.6.17 Return to Duty

```
COMMAND: ________                    NPPS
NEO9170              MASS RETURN TO DUTY - MRTD (NOAC 292)
-------------------------------------------------------------------------------
 EFDATE: __ __ __          DTYSTS: _
 AUTH1: ___                                AUTH2: ___
  ________________________                  ________________________
  ____________________________________      ____________________________________
 PRINT MEMO: _ (N,Y)
 REMARKS:                  SF 50 SIGNATURE: 1
  ___  ____________________________________________________________________
  ___  ____________________________________________________________________
 ORGANIZATION: ASSIGNED (RANGE) FROM: _____ TO: _____
 SSNS:
  ___ __ ____     ___ __ ____     ___ __ ____     ___ __ ____     ___ __ ____
  ___ __ ____     ___ __ ____     ___ __ ____     ___ __ ____     ___ __ ____
  ___ __ ____     ___ __ ____     ___ __ ____     ___ __ ____     ___ __ ____
  ___ __ ____     ___ __ ____     ___ __ ____     ___ __ ____     ___ __ ____
  ___ __ ____     ___ __ ____     ___ __ ____     ___ __ ____     ___ __ ____
  ___ __ ____     ___ __ ____     ___ __ ____     ___ __ ____     ___ __ ____
-------------------------------------------------------------------------------
 PF1= HELP                      PF5= MAIN MENU                      PF12= END
```

Mass Return To Duty (MRTD)

DESCRIPTION AND EXECUTION

The Mass Return to Duty (MRTD) template is used to generate a suspended Return to Duty (NOAC 292) for each employee selected based on user input (i.e., all employees whose Duty Status not equal to Z and whose Organization: Assigned matches or is within the range of the organizations "From and To" or SSNs specified). If no organizations or SSNs are specified, all employees who meet the criteria above will be selected. The Duty Status will be set equal to the Duty Status found in the employee's record if no Duty Status is input.

<u>Steps to Reach Mass Return to Duty</u>

1. At the Main Menu, select **1** - Personnel.
2. At the Personnel Main Menu, select **7** - Mass Actions.
3. At the Mass Actions Menu, select **17** - Mass Return to Duty.

DESCRIPTION OF DATA PROCESSING RESULTS AND OUTPUT

NPPS sets the source code to "R" for each generated transaction as being from the Return to Duty action process. The Return to Duty capability (292) generates a Memo in Lieu of an SF 50 if specified or an SF 50 (default). The Personnel in Lieu of SF 50 batch job will be scheduled if the Print Memo flag is set to "Y" at the time the actions are created.

4.1.6.18 Employee Service Record

```
COMMAND: ________                    NPPS
NEOB000                EMPLOYEE SERVICE RECORD - EMPSERV
-------------------------------------------------------------------------------


SSN:  ___ __ ____

NAME:  ______________________ ____________
          (LAST NAME)         (FIRST NAME)









-------------------------------------------------------------------------------
 PF1= HELP                  PF5= MAIN MENU                     PF12= END
```

Employee Service Record (EMPSERV)

DESCRIPTION AND EXECUTION

The Employee Service Record (EMPSERV) template is used to display an active employee's service record.

Steps to Reach Employee Service Record

1. At the Main Menu, select **1** - Personnel.
2. At the Personnel Main Menu, select **8** - Employee Service Record.

DESCRIPTION OF DATA PROCESSING RESULTS AND OUTPUT

Type in the SSN of the employee whose service record you want to view. (Refer to the following screen.)

```
COMMAND: ________                    NPPS
NEOB000              EMPLOYEE SERVICE RECORD - EMPSERV
-------------------------------------------------------------------------------



SSN:  000 00 0001


NAME:  _______________________ ____________
          (LAST NAME)         (FIRST NAME)









-------------------------------------------------------------------------------
 PF1= HELP                  PF5= MAIN MENU                    PF12= END
```

Enter SSN

You may enter the name to begin a personnel history name search if you do not know the employee's SSN. Press **ENTER**. NPPS displays the desired service record. (Refer to the following screens.)

```
NEMB000A                            NPPS
                          EMPLOYEE SERVICE RECORD

NAME:                                                        SSN:
ADDRESS:                                                        DUTY STATUS:

DATE OF BIRTH:                                               WORK SCHEDULE:
SEX:                                                  POSITION CRITICALITY:
DUTY STATION:                                            POSITION OCCUPIED:
ORGANIZATION:                                              PART-TIME HOURS:
FEDERAL SERVICE COMPUTATION DATE:                                  TENURE:
NASA SERVICE COMPUTATION DATE:                               VETERAN PREF:
INSTALLATION EOD DATE:                               VETERAN PREFERENCE RIF:
NEXT WIG DATE:                                          ANNUITANT INDICATOR:
LAST PROMOTION DATE:                                       RETIREMENT PLAN:
NEW SUPERVISOR DATE:                                              CITIZEN:
TENURE BEGINNING DATE:                       UNION BARGAINING UNIT STATUS:
TENURE ENDING DATE:                                     FEGLI STATUS CODE:
PROBATIONARY END DATE:                                     FEHB PLAN CODE:
FLSA PAY STATUS:                                        COMPETITIVE LEVEL:
NON NASA APPROPRIATION CODE:                                             :
PERF. CURRENT:          PERF PR1:           PR2:            PR3:         :
 PF1= HELP           PF3= PREV SCREEN   PF5= MAIN MENU        PF12= END_
```

View Service Record (Page 1)

```
NEMB000B                          NPPS
                            EMPLOYEE SERVICE RECORD         PAGE  0 OF 0

 NAME: YOUNGER                JANE         B              SSN: 000 00 0001

  NOAC  EFDATE            PERSONNEL ACTION TITLE
  ORG   PDN               OPM TITLE
                          NASA TITLE
                          OPM   NASA/SUPV  PP-GR/ST PRD PB ADJ-BASIC  SCH-ADJ
                          DUTY STATION









  PF1= HELP           PF3= PREV SCREEN   PF5= MAIN MENU        PF7= BACKWARD
  PF8= FORWARD        PF11= GO TO        PF12= END
```

View Service Record (Page 2)

```
NEMB000C                          NPPS
                            EMPLOYEE SERVICE RECORD




   OPF Sent to: ____________________________________   Date: ____________

   EPF Sent to: ____________________________________   Date: ____________

   EMF Sent to: ____________________________________   Date: ____________

   Leave Record Sent: ________________________________

   Reason for Resignation: ____________________________




  PF1= HELP           PF3= PREV SCREEN   PF5= MAIN MENU        PF12= END
```

View Service Record (Page 3)

4.1.7 Personnel History File Maintenance

```
COMMAND: ________                    NPPS
NEOC000            HISTORY MAINTENANCE MAIN MENU - HISTMAIN
-------------------------------------------------------------------------------



SSN:  ___ __ ____    NOAC:  _____    EFDATE:  __ __ ____   FUNC:  _









-------------------------------------------------------------------------------
 FUNCTION:    A= ADD     B = BROWSE     C= CHANGE     D= DELETE     R= RETRIEVE
       PF1= HELP                PF5= MAIN MENU                PF12= END
```

History Maintenance Main Menu (HISTMAIN)

DESCRIPTION AND EXECUTION

The History Maintenance Main Menu (HISTMAIN) template is used to change or delete any personnel history record on the personnel history file.

Steps to Reach History Maintenance Main Menu

1. At the Main Menu, select **1** - Personnel.
2. At the Personnel Main Menu, select **9** - Personnel History File Maintenance.

DESCRIPTION OF DATA PROCESSING RESULTS AND OUTPUT

Five functions are available on this screen. Functions "A" (Add), "C" (Change), "D" (Delete), and "R" (Retrieve) are used when you know the exact record to be processed. Function "B" (Browse) is used when you are not sure of the exact record and want to select the record from a list. To Add, Change, Delete, or Review a record, type in the SSN, NOAC, and Effective Date of the action and the appropriate function. Press **ENTER.** (Refer to the following screen.)

```
COMMAND: ________                    NPPS
NEOC000            HISTORY MAINTENANCE MAIN MENU - HISTMAIN
-------------------------------------------------------------------------------



SSN:  001 00 0001    NOAC:  721__    EFDATE:  09 01 1994   FUNC:  R









-------------------------------------------------------------------------------
 FUNCTION:    A= ADD     B = BROWSE     C= CHANGE     D= DELETE     R= RETRIEVE
      PF1= HELP                PF5= MAIN MENU                PF12= END
```

Select Action

If you select the Browse function, you will be prompted to enter either an SSN or a Name. Refer to the following screen.

```
COMMAND: ________                    NPPS
NEOC000            HISTORY MAINTENANCE MAIN MENU - HISTMAIN
-------------------------------------------------------------------------------

SSN:  ___ __ ____    NOAC:  _____    EFDATE:  __ __ ____   FUNC:

                              HISTORY BROWSE
  ---------------------------------------------------------------------
  ENTER NAME OR SSN TO BROWSE:

        SSN:   001 00 0001
        OR
        NAME:  ______________________   ____________

  ---------------------------------------------------------------------
        PF3=  PREV SCREEN
```

Initiate Browse By SSN

If SSN is entered, a list of all records with a Current SSN equal to the SSN entered and all records with a Previous SSN equal to the SSN entered will be displayed. (Refer to the following screens.)

```
COMMAND: ________                    NPPS
NEOC000            HISTORY MAINTENANCE MAIN MENU - HISTMAIN

NEOC010                     PERSONNEL HISTORY BROWSE

BEGINNING SOCIAL SECURITY NO: _________
TYPE 'X' TO SELECT AND PRESS ENTER

   ------------ CURRENT ------------    ------------ PREVIOUS -----------
SEL   SSN      DATE   NOAC    NAME   SEL   SSN      DATE   NOAC    NAME
 _ 001000001 09/07/94 875   JAMESTON  _ 001019443 01/01/92 990   SHELDER
 _ 001000001 09/01/94 721   JAMESTON  _ 001019443 01/02/91 894   SHELDER
 _ 001000001 09/01/94 872   JAMESTON  _ 001019443 01/01/91 990   SHELDER
 _ 001000001 08/16/94 792   JAMESTON  _ 001019443 12/31/90 894   SHELDER
 _ 001000001 05/13/94 875   JAMESTON  _ 001019443 09/10/89 920   SHELDER
 _ 001000001 03/18/94 815   JAMESTON  _ 001019443 09/10/89 990   SHELDER
    PF7 = BACKWARD   PF8 = FORWARD       PF9 = BACKWARD  PF10 = FORWARD
    PF6 = FULL SCREEN                    PF11 = FULL SCREEN
                                PF3 = PREV SCREEN
```

SSN Browse

This screen is split into two sides. The Current side contains all records with the Current SSN equal to the SSN entered. The Previous side contains all records with a Previous SSN equal to the SSN entered. The PF7 and PF8 keys are used to scroll through the Current information and the PF9 and PF10 keys are used to scroll through the Previous information. Pressing PF6 or PF11 will display an expanded screen that includes the employee's full name, the NOAC corrected, and the Organization: Assigned. (Refer to the following screen.)

```
COMMAND: ________                    NPPS
NEOC000            HISTORY MAINTENANCE MAIN MENU - HISTMAIN

            BROWSE BY CURRENT SOCIAL SECURITY NUMBER

SEL   SSN      DATE   NOAC1 AUTH   ORG             NAME
 _ 001000001 09/07/94 875__  V3G  AB111 JAMESTON, MELINDA ANN_________
 _ 001000001 09/01/94 721__  CGM  AB111 JAMESTON, MELINDA ANN_________
 _ 001000001 09/01/94 872__  CGM  CC231 JAMESTON, MELINDA ANN_________
 _ 001000001 08/16/94 792__  CGM  AB111 JAMESTON, MELINDA ANN_________
 _ 001000001 05/13/94 875__  V3G  CC231 JAMESTON, MELINDA ANN_________
 _ 001000001 03/18/94 815__  KLM  CC231 JAMESTON, MELINDA ANN_________
```

SSN Browse - Expanded Layout

If Name is entered with a function "B", a list of all records with a Current Name equal to the Name entered and all records with a Previous Name equal to the Name entered will be displayed. (Refer to the following screens.)

```
COMMAND: ________                    NPPS
NEOC000            HISTORY MAINTENANCE MAIN MENU - HISTMAIN
--------------------------------------------------------------------------------

SSN:  ___ __ ____    NOAC:  _____    EFDATE:  __ __ ____   FUNC:  B

HISTORY BROWSE

ENTER NAME OR SSN TO BROWSE:

       SSN:   ___ __ ____

       OR

       NAME:  Smith_______________   ____________

PF3=  PREV SCREEN
```

Initiate Browse By Name

```
COMMAND: ________                    NPPS
NEOC000            HISTORY MAINTENANCE MAIN MENU - HISTMAIN

 NEOC020                PERSONNEL HISTORY BROWS

 BEGINNING NAME: ____________________________________
 TYPE 'X' TO SELECT AND PRESS ENTER

    ------------ CURRENT ------------    ------------ PREVIOUS
 SEL   NAME     DATE   NOAC     SSN   SEL  NAME      DATE   NOAC     SSN
  _ SMITH JAN 01/01/92 990   100101009 _ TADPOLE F 01/01/92 990   100988122
  _ SMITH JAN 01/02/91 894   100101009 _ TADPOLE F 01/01/91 943   100988122
  _ SMITH JAN 01/01/91 990   100101009 _ TADPOLE F 01/01/91 990   100988122
  _ SMITH JAN 01/01/91 991   100101009 _ TADPOLE F 12/30/90 101   100988122
  _ SMITH JAN 12/31/90 894   100101009 _ TADPOLE F 08/27/89 894   100988122
  _ SMITH JAN 12/31/90 990   100101009 _ TADPOLE F 09/01/87 894   100988122
     PF7 = BACKWARD   PF8 = FORWARD       PF9 = BACKWARD  PF10 = FORWARD
     PF6 = FULL SCREEN                    PF11 = FULL SCREEN
                              PF3 = PREV SCREEN
```

Name Browse

This screen is split into two sides. The Current side contains all records with the Current Name equal to the Name entered. The Previous side contains all records with a Previous Name equal to the Name entered. The PF7 and PF8 keys are used to scroll through the Current information and the PF9 and PF10 keys are used to scroll through the Previous information. Pressing PF6 or PF11 will display an expanded screen that includes the employee's full name, the NOAC corrected, and the Organization: Assigned. (Refer to the following screen.)

```
COMMAND: ________                    NPPS
 NEOC000            HISTORY MAINTENANCE MAIN MENU - HISTMAIN


              BROWSE BY CURRENT NAME

 SEL             NAME                 SSN       DATE   NOAC1 AUTH   ORG
  _  SMITH JANE M                   100101009 01/01/92 990         AH111
  _  SMITH JANE M                   100101009 01/02/91 894    ZLM  AH111
  _  SMITH JANE M                   100101009 01/01/91 990         AH111
  _  SMITH JANE M                   100101009 01/01/91 991         AH111
  _  SMITH JANE M                   100101009 12/31/90 894    RUM  AH111
  _  SMITH JANE M                   100101009 12/31/90 990         AH111
```

Name Browse - Expanded Layout

When a record is selected from one of the Browse screens, the SSN, NOAC, and EFDATE will be populated on the Personnel History Maintenance Main Menu. When you select the desired function and press **ENTER**, NPPS displays the Personnel History Maintenance screens (refer to the following screens). Press **ENTER** to continue to the next screen, **PF6** to end the action, or **PF11** to go to a specific screen.

```
NEMC000A                          NPPS                    1 OF 25
MODE: CHANGE            PERSONNEL HISTORY MAINTENANCE
--------------------------------------------------------------------------
NAME                                                   SSN
NOAC1                              EFDATE                 0  > _______0
NOAC2                >    _____    BYPASS EDIT
NOACNTE1             > ________    MATUREDTE              0
NOACNTE2             > ________    ENTRYCLERK/DTE                     0
AUTH1                >      ___    UPDATECLERK/DTE                    0
AUTH2                >      ___    UPDATETIME
AGE             0.0 >     __.0     PREVSSN                  > _________
TIME IN GRADE   0.0 >     __.0     INSTALLCURRT          0.0 >      __.0
NSCDCURRT       0.0 >     __.0     CORCAN FLAG              >         _
FSCDCURRT       0.0 >     __.0     SEQ                    1 >         0
NOAC DESCRIPTION     ______________________________________________________
NAME(LAST,GENS,FIRST,
     MIDDLE)         ______________________ ___ ____________ ____________
PREVIOUS NAME(LAST,GENS,
            FIRST,MIDDLE) ______________________ ___ ____________ ____________
 PF1= HELP                     PF3= PREV SCREEN                PF5= MAIN MENU
 PF6= END ACTION               PF11= GO TO                     PF12= END
```

Personnel History Maintenance (Page 1)

```
NEMC000B                          NPPS                    2 OF 25
MODE: CHANGE            PERSONNEL HISTORY MAINTENANCE
--------------------------------------------------------------------------
NAME                                                   SSN
                 B E F O R E                     A F T E R
ADMINLEV             >       _____                   >       _____
AGENCY               >        ____                   >        ____
AGENCYFROM           >        ____                   >        ____
AGENCYTO             >        ____                   >        ____
ANUIND               >           _                   >           _
APPTNTEDTE         0 >    _______0                 0 >    _______0
AWDAMT          0.00 >    _____. 0             0.00 >    _____. 0

AWDCHK               >           _                   >           _

AWDTYP               >           _                   >           _
AWDYR                >          __                   >          __
BDYR                 >        ____                   >        ____
--------------------------------------------------------------------------
 PF1= HELP                     PF3= PREV SCREEN                PF5= MAIN MENU
 PF6= END ACTION               PF11= GO TO                     PF12= END
```

Personnel History Maintenance (Page 2)

```
NEMC000C                              NPPS                        3 OF 25
MODE: CHANGE              PERSONNEL HISTORY MAINTENANCE
--------------------------------------------------------------------------------
NAME                                                          SSN
                  B E F O R E                       A F T E R
BIRTHDTE             0 > _______0                     0 > _______0
CITIZEN                >       _                       >       _
COMPLEV                >     ____                      >     ____
CONVENDDTE           0 > _______0                     0 > _______0
COOPENTRYDTE         0 > _______0                     0 > _______0
COOPFLD                >   ______                      >   ______
COOPLEV                >       _                       >       _
COOPRTDDTE           0 > _______0                     0 > _______0
COOPRTSDTE           0 > _______0                     0 > _______0
COOPSCH                > ________                      > ________
COOPYR                 >     ____                      >     ____
CPP                    >       __                      >       __
CREDMILSERV          0 >   _____0                     0 >   _____0
--------------------------------------------------------------------------------
 PF1= HELP                       PF3= PREV SCREEN                PF5= MAIN MENU
 PF6= END ACTION                 PF11= GO TO                     PF12= END
```

Personnel History Maintenance (Page 3)

```
NEMC000D                              NPPS                        4 OF 25
MODE: CHANGE              PERSONNEL HISTORY MAINTENANCE
--------------------------------------------------------------------------------
NAME                                                          SSN
                  B E F O R E                       A F T E R
CURRGRDDTE           0 >  _______0                    0 >  _______0
DAYLIMIT             0 >       __0                    0 >       __0
DEPARTDEST             >         _                      >         _
DEPARTRSN              >         _                      >         _
DETAILENDDTE         0 >  _______0                    0 >  _______0
DLRLIMIT          0.00 > ______. 0                 0.00 > ______. 0
DTLDTYSTN              > _________                      > _________
DTLGRADE             0 >        _0                    0 >        _0
DTLNCC                 >     _____                      >     _____
DTLOCCODE              >     _____                      >     _____
DTLORGASSIGN           >     _____                      >     _____
DTLPAYPLN              >       __                       >       __
DTLPDN                 >    ______                      >    ______
--------------------------------------------------------------------------------
 PF1= HELP                       PF3= PREV SCREEN                PF5= MAIN MENU
 PF6= END ACTION                 PF11= GO TO                     PF12= END
```

Personnel History Maintenance (Page 4)

```
NEMC000E                          NPPS                    5 OF 25
MODE: CHANGE            PERSONNEL HISTORY MAINTENANCE
-------------------------------------------------------------------------------
NAME                                                      SSN

BEFORE:  DTLNASATTL
                    ____________________________________________________
AFTER :  DTLNASATTL
                    ____________________________________________________
BEFORE:  DTLOPMTTL
                    ____________________________________________________
AFTER :  DTLOPMTTL
                    ____________________________________________________
BEFORE:  DTYSTNNAME
                    ____________________________________________________
AFTER :  DTYSTNNAME
                    ____________________________________________________

-------------------------------------------------------------------------------
 PF1= HELP                      PF3= PREV SCREEN                PF5= MAIN MENU
 PF6= END ACTION                PF11= GO TO                     PF12= END
```

Personnel History Maintenance (Page 5)

```
NEMC000F                          NPPS                    6 OF 25
MODE: CHANGE            PERSONNEL HISTORY MAINTENANCE
-------------------------------------------------------------------------------
NAME                                                      SSN
                B E F O R E                     A F T E R
DTLTITLECDE           >        __                   >        __
DTYSTN                > _________                   > _________
DTYSTS                >         _                   >         _
EDLEV                 >        __                   >        __
EMPIND                >         _                   >         _
EMPNO                 >    ______                   >    ______
EODDTE              0 >  _______0                 0 >  _______0
FACILITY              >         _                   >         _
FEGLI                 >        __                   >        __
FEHB                  >     _____                   >     _____
FEHBFULLPAY           >         _                   >         _
FERSCOVER             >         _                   >         _
FINSTM                >         _                   >         _
-------------------------------------------------------------------------------
 PF1= HELP                      PF3= PREV SCREEN                PF5= MAIN MENU
 PF6= END ACTION                PF11= GO TO                     PF12= END
```

Personnel History Maintenance (Page 6)

```
NEMC000G                          NPPS                    7 OF 25
MODE: CHANGE            PERSONNEL HISTORY MAINTENANCE
--------------------------------------------------------------------------
NAME                                                      SSN
                B E F O R E                     A F T E R
FINSTMDTE          0 >    _______0                 0      _______0
FLSA                 >          _                    >          _
FOLLOW1            0 > __ _______0                 0 > __ _______0
FOLLOW2            0 > __ _______0                 0 > __ _______0
FOLLOW3            0 > __ _______0                 0 > __ _______0
FOLLOW4            0 > __ _______0                 0 > __ _______0
FOLLOW5            0 > __ _______0                 0 > __ _______0
FOLLOW6            0 > __ _______0                 0 > __ _______0
FOLLOW7            0 > __ _______0                 0 > __ _______0
FOLLOW8            0 > __ _______0                 0 > __ _______0
FOUFLD               >      ______                  >      ______
FOULEV               >           _                  >           _
FOUSCH               >    ________                  >    ________
--------------------------------------------------------------------------
 PF1= HELP                     PF3= PREV SCREEN                PF5= MAIN MENU
 PF6= END ACTION               PF11= GO TO                     PF12= END
```

Personnel History Maintenance (Page 7)

```
NEMC000H                          NPPS                    8 OF 25
MODE: CHANGE            PERSONNEL HISTORY MAINTENANCE
--------------------------------------------------------------------------
NAME                                                      SSN
                B E F O R E                     A F T E R
FOUYR                >     ____                   >     ____
FROZENCSRS         0 >   _____0                 0 >   _____0
FSCDTE             0 > _______0                 0 > _______0
FTELI                >       __                   >       __
FUNCCLASS            >       __                   >       __
FURNTEDTE          0 > _______0                 0 > _______0
GRADE              0 >       _0                 0 >       _0
GRADERETN            >       __                   >       __
HANDICAP             >       __                   >       __
HEAD-AGENCY          >        _                   >        _
HIFLD                >   ______                   >   ______
HIGRADE            0 >       _0                 0 >       _0
HILEV                >        _                   >        _
--------------------------------------------------------------------------
 PF1= HELP                     PF3= PREV SCREEN                PF5= MAIN MENU
 PF6= END ACTION               PF11= GO TO                     PF12= END
```

Personnel History Maintenance (Page 8)

```
NEMC000I                          NPPS                    9 OF 25
MODE: CHANGE            PERSONNEL HISTORY MAINTENANCE
-------------------------------------------------------------------------------
NAME                                                      SSN
                 B E F O R E                    A F T E R
HIPAYPLN               >           __                >           __
HISCH                  >     ________                >     ________
HIYR                   >         ____                >         ____
HRLIMIT              0 >         ___0              0 >         ___0
INSTALL                >                         JCH1 >         ____
LASTPROMODTE         0 >     _______0              0 >     _______0
LEQDTE               0 >     _______0              0 >     _______0
LVENTITLE              >            _                >            _
LWOPNTEDTE           0 >     _______0              0 >     _______0
LWPNTEDTE            0 >     _______0              0 >     _______0
MINCDE                 >            _                >            _
NAMEFIRST              > ____________                > ____________
NAMEGENSUFX            >          ___                >          ___
-------------------------------------------------------------------------------
 PF1= HELP                      PF3= PREV SCREEN                PF5= MAIN MENU
 PF6= END ACTION                PF11= GO TO                     PF12= END
```

Personnel History Maintenance (Page 9)

```
NEMC000J                          NPPS                   10 OF 25
MODE: CHANGE            PERSONNEL HISTORY MAINTENANCE
-------------------------------------------------------------------------------
NAME                                                      SSN

BEFORE: LOCALTTL
                 ___________________________
AFTER : LOCALTTL
                 ___________________________
BEFORE: NASATTL
                 ____________________________________________________
AFTER : NASATTL
                 ____________________________________________________
BEFORE: OPMTTL
                 ____________________________________________________
AFTER : OPMTTL
                 ____________________________________________________

-------------------------------------------------------------------------------
 PF1= HELP                      PF3= PREV SCREEN                PF5= MAIN MENU
 PF6= END ACTION                PF11= GO TO                     PF12= END
```

Personnel History Maintenance (Page 10)

```
NEMC000K                          NPPS                    11 OF 25
MODE: CHANGE            PERSONNEL HISTORY MAINTENANCE
------------------------------------------------------------------------------
NAME                                                        SSN
                 B E F O R E                     A F T E R
NAMELAST
                _____________________           _____________________
NCC                 >        _____                  >        _____
NEWSUPBEGDTE      0 >      _______0              0 >      _______0
NEWSUPENDDTE      0 >      _______0              0 >      _______0
NEXTWIGDTE        0 >      _______0              0 >      _______0
NNASAAPPRO
                 __________________              __________________
NNASAPROJLI         >   ___________                >   ___________
NSCDTE            0 >      _______0              0 >      _______0
NSPI                >       ______                 >       ______
OCCODE              >        _____                 >        _____
ORGASSIGN           >        _____                 >        _____
------------------------------------------------------------------------------
 PF1= HELP                      PF3= PREV SCREEN                PF5= MAIN MENU
 PF6= END ACTION                PF11= GO TO                     PF12= END
```

Personnel History Maintenance (Page 11)

```
NEMC000L                          NPPS                    12 OF 25
MODE: CHANGE            PERSONNEL HISTORY MAINTENANCE
------------------------------------------------------------------------------
NAME                                                        SSN
                B E F O R E                      A F T E R
ORGLOC              >    _____                     >    _____
PAYBASIS            >       __                     >       __
PAYPLN              >       __                     >       __
PAYPLNRETN          >       __                     >       __
PAYTABLE            >      ___                     >      ___
PDN                 >   ______                     >   ______
PEFRATC           0 >        0                  0 >        0
PEFRATCYR           >       __                     >       __
PEFRATP1          0 >        0                  0 >        0
PEFRATP1YR          >       __                     >       __
PEFRATP2          0 >        0                  0 >        0
PEFRATP2YR          >       __                     >       __

------------------------------------------------------------------------------
 PF1= HELP                      PF3= PREV SCREEN                PF5= MAIN MENU
 PF6= END ACTION                PF11= GO TO                     PF12= END
```

Personnel History Maintenance (Page 12)

```
NEMC000M                          NPPS                    13 OF 25
MODE: CHANGE            PERSONNEL HISTORY MAINTENANCE
--------------------------------------------------------------------------
NAME                                                        SSN
                 B E F O R E                     A F T E R
POSCHGNTEDTE        0 > _______0                  0 > _______0
POSCRIT               >      ___                    >      ___
POSOCC                >        _                    >        _
POSTYPE               >        _                    >        _
POSTYPELOC            >       __                    >       __
PRD                   >        _                    >        _
PRIORRETCOV           >        _                    >        _
PROBENDDTE          0 > _______0                  0 > _______0
PROJPROMO             >       __                    >       __
PROMONTEDTE         0 > _______0                  0 > _______0
PTHOURS               >       __                    >       __
RETDISDTE           0 > _______0                  0 > _______0

--------------------------------------------------------------------------
 PF1= HELP                      PF3= PREV SCREEN                PF5= MAIN MENU
 PF6= END ACTION                PF11= GO TO                     PF12= END
```

Personnel History Maintenance (Page 13)

```
NEMC000N                          NPPS                    14 OF 25
MODE: CHANGE            PERSONNEL HISTORY MAINTENANCE
--------------------------------------------------------------------------
NAME                                                        SSN
                 B E F O R E                     A F T E R
RETENEXPDTE         0 >    _______0                 0 >    _______0
RETOPTDTE           0 >    _______0                 0 >    _______0
RETPLAN               >           _                   >           _
RMPAYSTAT             >           _                   >           _
RMRETIRBASIS          >           _                   >           _
RMRETIRDTE          0 >    _______0                 0 >    _______0
RMSVCCOMP             >           _                   >           _
RMSVCDESIG            >           _                   >           _
RMSVCNUM              > ___________                   > ___________
RMSVCPAYGRD           >         ___                   >         ___
RRBRANCH              >          __                   >          __
RRRANK                >          __                   >          __
RSCDTE              0 >    _______0                 0 >    _______0
--------------------------------------------------------------------------
 PF1= HELP                      PF3= PREV SCREEN                PF5= MAIN MENU
 PF6= END ACTION                PF11= GO TO                     PF12= END
```

Personnel History Maintenance (Page 14)

```
NEMC000O                          NPPS                    15 OF 25
MODE: CHANGE            PERSONNEL HISTORY MAINTENANCE
-------------------------------------------------------------------------------
NAME                                                        SSN
                B E F O R E                     A F T E R
RTD                  >         _                    >         _
RTDGROUP             >        __                    >        __
SABBNTEDTE         0 >  _______0                  0 >  _______0
SALANN          0.00 > ______. 0               0.00 > ______. 0
SALDAILY        0.00 > ______. 0               0.00 > ______. 0
SALHOURLY       0.00 > ______. 0               0.00 > ______. 0
SECFLD               >    ______                    >    ______
SECLEV               >         _                    >         _
SECSCH               >  ________                    >  ________
SECYR                >      ____                    >      ____
SES PROB           0 >  _______0                  0 >  _______0
SEX                  >         _                    >         _
STEP                 >        __                    >        __
-------------------------------------------------------------------------------
 PF1= HELP                      PF3= PREV SCREEN                PF5= MAIN MENU
 PF6= END ACTION                PF11= GO TO                     PF12= END
```

Personnel History Maintenance (Page 15)

```
NEMC000P                          NPPS                    16 OF 25
MODE: CHANGE            PERSONNEL HISTORY MAINTENANCE
-------------------------------------------------------------------------------
NAME                                                        SSN
                B E F O R E                     A F T E R
STEPRETN             >        __                    >        __
SUPIND               >         _                    >         _
SUSPNTEDTE         0 > _______0                  0 > _______0
TENURE               >         _                    >         _
TENUREBEGDTE       0 > _______0                  0 > _______0
TENUREENDDTE       0 > _______0                  0 > _______0
THRFLD               >    ______                    >    ______
THRLEV               >         _                    >         _
THRSCH               > ________                    > ________
THRYR                >     ____                    >     ____
TITLECDE             >        __                    >        __
TRAINDEVPGM          >        __                    >        __
TSPELIGDTE         0 > _______0                  0 > _______0
-------------------------------------------------------------------------------
 PF1= HELP                      PF3= PREV SCREEN                PF5= MAIN MENU
 PF6= END ACTION                PF11= GO TO                     PF12= END
```

Personnel History Maintenance (Page 16)

```
NEMC000Q                              NPPS                    17 OF 25
MODE: CHANGE            PERSONNEL HISTORY MAINTENANCE
-------------------------------------------------------------------------------
NAME                                                            SSN
                 B E F O R E                      A F T E R
TSPSCDTE            0 > _______0                    0 > _______0
TSPSEPCODE            >        _                      >        _
TSPSEPDTE           0 > _______0                    0 > _______0
TSPSTATUS             >        _                      >        _
TSPSTATUSDTE        0 > _______0                    0 > _______0
TSPVEST               >        _                      >        _
UNIONBU               >     ____                      >     ____
VETPREF               >        _                      >        _
VETPREFRIF            >        _                      >        _
VETSTATUS             >        _                      >        _
WIGWENDDTE          0 > _______0                    0 > _______0
WORKSCH               >        _                      >        _
-------------------------------------------------------------------------------
 PF1= HELP                      PF3= PREV SCREEN                PF5= MAIN MENU
 PF6= END ACTION                PF11= GO TO                     PF12= END
```

Personnel History Maintenance (Page 17)

```
NEMC000R                              NPPS                    18 OF 25
MODE: CHANGE            PERSONNEL HISTORY MAINTENANCE
-------------------------------------------------------------------------------
NAME                                                            SSN
                 B E F O R E                      A F T E R
COOPGPA          0.00 > _. 0                     0.00 > _. 0
FOUGPA           0.00 > _. 0                     0.00 > _. 0
HIGPA            0.00 > _. 0                     0.00 > _. 0
SECGPA           0.00 > _. 0                     0.00 > _. 0
THRGPA           0.00 > _. 0                     0.00 > _. 0
BEFORE: ORGALEVEL1
                 ________________________________________
AFTER : ORGALEVEL1
                 ________________________________________
BEFORE: ORGALEVEL2
                 ________________________________________
AFTER : ORGALEVEL2
                 ________________________________________
-------------------------------------------------------------------------------
 PF1= HELP                      PF3= PREV SCREEN                PF5= MAIN MENU
 PF6= END ACTION                PF11= GO TO                     PF12= END
```

Personnel History Maintenance (Page 18)

```
NEMC000S                              NPPS                    19 OF 25
MODE: CHANGE            PERSONNEL HISTORY MAINTENANCE
-------------------------------------------------------------------------------
NAME                                                          SSN

BEFORE:  ORGALEVEL3
                        ____________________________________________
AFTER :  ORGALEVEL3
                        ____________________________________________
BEFORE:  ORGALEVEL4
                        ____________________________________________
AFTER :  ORGALEVEL4
                        ____________________________________________
BEFORE:  AWARD-GROUP-TEXT
                                 ________________________________
AFTER:   AWARD-GROUP-TEXT
                                 ________________________________

-------------------------------------------------------------------------------
 PF1= HELP                      PF3= PREV SCREEN                PF5= MAIN MENU
 PF6= END ACTION                PF11= GO TO                     PF12= END_
```

Personnel History Maintenance (Page 19)

```
NEMC000T                              NPPS                    20 OF 25
MODE: CHANGE            PERSONNEL HISTORY MAINTENANCE
-------------------------------------------------------------------------------
NAME                                                          SSN
                                   B E F O R E                A F T E R
EMPL-ADJSTD-BASIC-PAY-AMT          0.00 >  ______. 0        0.00 >  ______. 0
EMPL-AUO-ANL-AMT                      0 >  ____0               0 >  ____0
EMPL-AUO-PCT                          0 >  _0                  0 >  _0
EMPL-BASIC-PAY-AMT                 0.00 >  ______. 0        0.00 >  ______. 0
EMPL-BONUS-DFRNTL-BASIS-CODE            >  _                     >  _
EMPL-BONUS-RCRTMNT-AMT                0 >  ____0               0 >  ____0
EMPL-BONUS-RCRTMNT-PCT                0 >  _0                  0 >  _0
EMPL-BONUS-RLCTN-AMT                  0 >  ____0               0 >  ____0
EMPL-BONUS-RLCTN-PCT                  0 >  _0                  0 >  _0
EMPL-FRGN-LNG-ANL-AMT                 0 >  ____0               0 >  ____0
EMPL-LCLTY-ADJSTMNT-ANL-AMT           0 >  ____0               0 >  ____0
EMPL-LCLTY-ADJSTMNT-IND                 >  __                    >  __
EMPL-OTHR-PAY-AMT                     0 >  _____0              0 >  _____0
-------------------------------------------------------------------------------
 PF1= HELP                      PF3= PREV SCREEN                PF5= MAIN MENU
 PF6= END ACTION                PF11= GO TO                     PF12= END
```

Personnel History Maintenance (Page 20)

```
NEMC000U                          NPPS                    21 OF 25
MODE: CHANGE            PERSONNEL HISTORY MAINTENANCE
-------------------------------------------------------------------------------
NAME                                                     SSN
                                B E F O R E                A F T E R
RETENTION-ALLOW                    0 >  ____0                0 >  ____0
EMPL-RTNTN-ALWNC-NTE-DATE          0 >  _______0             0 >  _______0
EMPL-RTNTN-ALWNC-PCT               0 >  _0                   0 >  _0
SUPER-DIFF                         0 >  ____0                0 >  ____0
EMPL-SPRVSRY-DFRNTL-PCT              >  __                     >  __
EMPL-SRVC-AGRMNT-END-DATE          0 >  _______0             0 >  _______0
EMPL-STFNG-DFRNTL-ANL-AMT          0 >  ____0                0 >  ____0
EMPL-STFNG-DFRNTL-PCT              0 >  _0                   0 >  _0
EMPL-TOT-PAY-AMT                0.00 >  ______. 0         0.00 >  ______. 0
EMPL-TIME-OFF-AWARD-HOURS        0.0 >  ___.0              0.0 >  ___.0
EMPL-TOA-HRS-YTD-GRNTD-QTY      0.00 >  ____. 0           0.00 >  ____. 0
EMPL-PRFRMNC-RTNG-YEAR3-CODE       0 >  0                    0 >  0
EMPL-PRFRMNC-RTNG-YEAR3-YEAR         >  __                     >  __
-------------------------------------------------------------------------------
 PF1= HELP                     PF3= PREV SCREEN                PF5= MAIN MENU
 PF6= END ACTION               PF11= GO TO                     PF12= END
```

Personnel History Maintenance (Page 21)

```
NEMC000V                          NPPS                    22 OF 25
MODE:                   PERSONNEL HISTORY MAINTENANCE
-------------------------------------------------------------------------------
NAME                                                     SSN
                                B E F O R E                A F T E R
EMPL-SCH-BASIC-PAY              0.00 >  ______. 0         0.00 >  ______. 0
EMPL-SCH-ADJSTD-BASIC-PAY       0.00 >  ______. 0         0.00 >  ______. 0
EMPL-RDCTN-IN-FRC-NTE-DATE         0 >  _______0             0 >  _______0
EMPL-LCTD-INSTLTN-CODE               >  ____                   >  ____
EMPL-CRNT-RTNG-EFCTV-DATE          0 >  _______0             0 >  _______0
EMPL-PRIOR1-RTNG-EFCTV-DATE        0 >  _______0             0 >  _______0
EMPL-PRIOR2-RTNG-EFCTV-DATE        0 >  _______0             0 >  _______0
EMPL-PRIOR3-RTNG-EFCTV-DATE        0 >  _______0             0 >  _______0
EMPL-SRVC-CMPTN-RTRMNT-DATE        0 >  _______0             0 >  _______0
EMPL-AWARD-BDGT-CODE                 >  ________               >  ________
EMPL-FERS-MRA-DATE                   >  ________               >  ________
EMPL-ARMY-LINE-NMBR-CODE             >  ________               >  ________
EMPL-ARMY-PRGRPH-CODE                >  ________               >  ________
-------------------------------------------------------------------------------
 PF1= HELP                     PF3= PREV SCREEN                PF5= MAIN MENU
 PF6= END ACTION               PF11= GO TO                     PF12= END
```

Personnel History Maintenance (Page 22)

```
NEMC000Y                              NPPS                    23 OF 25
MODE:                   PERSONNEL HISTORY MAINTENANCE
-------------------------------------------------------------------------------
NAME                                                          SSN
                                B E F O R E                     A F T E R
EMPL-AVLBLTY-PAY-ANL-AMT        0 >  ____0                    0 >  ____0
EMPL-SCHDL-LCLTY-ADJ-ANL-AMT    0 >  ____0                    0 >  ____0
EMPL-SCHDL-TOT-PAY-AMT          0 >  _____. 0                 0 >  _____. 0
EMPL-CRNT-RTNG-PTRN-CODE          >  _                          >  _
EMPL-PRIOR1-RTNG-PTRN-CODE        >  _                          >  _
EMPL-PRIOR2-RTNG-PTRN-CODE        >  _                          >  _
EMPL-PRIOR3-RTNG-PTRN-CODE        >  _                          >  _
PER-PCA-ANL-AMT                 0 >  ___0                     0 >  ____0



-------------------------------------------------------------------------------
 PF1= HELP                      PF3= PREV SCREEN                PF5= MAIN MENU
 PF6= END ACTION                PF11= GO TO                     PF12= END
```

Personnel History Maintenance (Page 23)

```
NEMC000W                              NPPS                    24 OF 25
MODE: CHANGE            PERSONNEL HISTORY MAINTENANCE
-------------------------------------------------------------------------------
NAME                                                          SSN

OPF-SENT-DATE                     0 >  _______0
EPF-SENT-DATE                     0 >  _______0
EMF-SENT-DATE                     0 >  _______0
OPF-SENT-TO
                  ____________________________________
EPF-SENT-TO
                  ____________________________________
EMF-SENT-TO
                  ____________________________________
LEAVE-RECS-SENT
                  ________________________________
REASON-RESIGNED
                  ____________________________
-------------------------------------------------------------------------------
PF1= HELP                       PF3= PREV SCREEN                PF5= MAIN MENU
PF6= END ACTION                 PF11= GO TO                     PF12= END
```

PersonneL History Maintenance (Page 24)

```
NEMC000X                          NPPS                    25 OF 25
MODE: CHANGE            PERSONNEL HISTORY MAINTENANCE
--------------------------------------------------------------------------------
NAME                                                      SSN

FORWARDING ADDRESS

   STREET LINE 1
                 ___________________________________
   STREET LINE 2
                 ___________________________________
   CITY
                 ________________
   STATE                            ZIP
                 ___                       __________



--------------------------------------------------------------------------------
 PF1= HELP                      PF3= PREV SCREEN                PF5= MAIN MENU
 PF6= END ACTION                PF11= GO TO                     PF12= END
```

Personnel History Maintenance (Page 25)

4.1.7.1 Personnel Audit Browse

```
COMMAND: ________                    NPPS
NEOD000                HISTORY AUDIT MAIN MENU - AUDIT
-------------------------------------------------------------------------------



SSN:  ___ __ ____    NOAC:  _____    EFDATE:  __ __ ____   FUNC:  _

OR

NAME  ______________________  ____________



-------------------------------------------------------------------------------
 FUNCTION:    B= BROWSE   R= RETRIEVE
       PF1= HELP                PF5= MAIN MENU                PF12= END
```

History Audit Main Menu (AUDIT)

DESCRIPTION AND EXECUTION

The History Audit Main Menu (AUDIT) template is used to view the transaction history of all corrections and cancellations that have been applied to the personnel history file.

<u>Steps to Reach History Audit Main Menu</u>

1. At the Main Menu, select **1** - Personnel.
2. At the Personnel Main Menu, select **10** - Personnel Audit Browse.

DESCRIPTION OF DATA PROCESSING RESULTS AND OUTPUT

Two functions are available on this screen. Function "R" (Review) is used when you know the exact record to be viewed. Function "B" (Browse) is used when you are not sure of the exact record and want to select the record from a list. To review a record, type in the SSN, NOAC, and Effective Date of the action and a function "R". Press **ENTER** (refer to the following screen).

```
COMMAND: ________                    NPPS
NEOD000                HISTORY AUDIT MAIN MENU - AUDIT
--------------------------------------------------------------------------



SSN:  001 00 0001    NOAC:  001__    EFDATE:  08 31 1990   FUNC:  R

OR

NAME  ______________________  ___________









--------------------------------------------------------------------------
 FUNCTION:    B= BROWSE   R= RETRIEVE
       PF1= HELP                PF5= MAIN MENU                PF12= END
```

Select Action

If you select the browse function, NPPS will generate a list of actions on the history audit file based on the SSN or Name entered.

If SSN is entered with a function "B", a list of all records with a Current SSN equal to the SSN entered and all records with a Previous SSN equal to the SSN entered will be displayed. (Refer to the following screens).

```
COMMAND: ________                    NPPS
NEOD000                HISTORY AUDIT MAIN MENU - AUDIT
--------------------------------------------------------------------------



SSN:  001 00 0001    NOAC:  _____    EFDATE:  __ __ ____   FUNC:  B

OR

NAME  ______________________  ___________









--------------------------------------------------------------------------
 FUNCTION:    B= BROWSE   R= RETRIEVE
       PF1= HELP                PF5= MAIN MENU                PF12= END
```

Initiate Browse By SSN

```
COMMAND: ________                    NPPS
NEOD000                HISTORY AUDIT MAIN MENU - AUDIT

    NEOD010                     PERSONNEL HISTORY BROWSE

   BEGINNING SOCIAL SECURITY NO: _________
   TYPE 'X' TO SELECT AND PRESS ENTER

      ------------ CURRENT ------------    ------------ PREVIOUS -----------
   SEL   SSN      DATE   NOAC    NAME   SEL   SSN      DATE   NOAC    NAME
    _ 001000001 09/01/94 002   JAMESTON  _ 001019443 07/01/94 002   SHELDER
    _ 001000001 08/17/94 001   JAMESTON  _ 100313120 09/10/89 002   LARGE
    _ 001000001 08/16/94 002   JAMESTON  _ 100313120 09/10/89 170   LARGE
    _ 001000001 01/01/94 002   JAMESTON  _ 100990017 09/09/90 002 CONTRACTA
    _ 001000001 08/25/89 002   JAMESTON  _ 100990017 09/09/90 140 CONTRACTA
    _                                    _
       PF7 = BACKWARD   PF8 = FORWARD       PF9 = BACKWARD  PF10 = FORWARD
       PF6 = FULL SCREEN                    PF11 = FULL SCREEN
                                  PF3 = PREV SCREEN
```

SSN Browse

This screen is split into two sides. The Current side contains all records with the Current SSN equal to the SSN entered. The Previous side contains all records with a Previous SSN equal to the SSN entered. The PF7 and PF8 keys are used to scroll through the Current information and the PF9 and PF10 keys are used to scroll through the Previous information. Pressing PF6 or PF11 will display an expanded screen that includes the employee's full name, the NOAC corrected, and the Organization: Assigned. (Refer to the following screen).

```
COMMAND: ________                    NPPS
NEOD000                HISTORY AUDIT MAIN MENU - AUDIT




              BROWSE BY CURRENT SOCIAL SECURITY NUMBER

  SEL   SSN      DATE   NOAC1 NOAC2  ORG             NAME
   _ 001000001 09/01/94 002   721   CC231 JAMESTON, MELINDA ANN
   _ 001000001 08/17/94 002   895   AB111 JAMESTON, MELINDA ANN
   _ 001000001 08/16/94 002   450   AB111 JAMESTON, MELINDA ANN
   _ 001000001 01/01/94 002   501   AB111 JAMESTON, MELINDA ANN
   _ 001000001 08/25/89 002   716   AB111 JAMESTON, MELINDA ANN
   _
```

SSN Browse - Expanded Layout

If Name is entered with a function "B", a list of all records with a Current Name equal to the Name entered and all records with a Current Name equal to the Previous Name of the records listed under Current will be displayed. (Refer to the following screens).

```
COMMAND: ________                    NPPS
NEOD000                HISTORY AUDIT MAIN MENU - AUDIT
--------------------------------------------------------------------------------



SSN:  ___ __ ____    NOAC:  _____    EFDATE:  __ __ ____   FUNC:  B

OR

NAME  Smith_________________  ____________



--------------------------------------------------------------------------------
 FUNCTION:    B= BROWSE   R= RETRIEVE
       PF1= HELP                PF5= MAIN MENU                PF12= END
```

Initiate Browse By Name

```
COMMAND: ________                    NPPS
NEOD000                HISTORY AUDIT MAIN MENU - AUDIT

    NEOD020                  HISTORY AUDIT BROWSE

   BEGINNING NAME: ____________________________________
   TYPE 'X' TO SELECT AND PRESS ENTER

      ------------ CURRENT ------------    ------------ PREVIOUS ------------
   SEL   NAME     DATE   NOAC     SSN   SEL  NAME      DATE   NOAC     SSN
    _ SMITH JAN 03/29/91 002   100101009 _ SMITH JOH 12/30/90 002 100101009
    _ SMITH MAR 01/10/91 002   100601250 _ SMITHOREE 12/15/90 001 100595030
    _ SMITH TAY 03/09/90 002   100601254 _
    _ SMITHORS  01/14/91 002   100595030
    _                                    _
    _                                    _
       PF7 = BACKWARD   PF8 = FORWARD       PF9 = BACKWARD  PF10 = FORWARD
       PF6 = FULL SCREEN                    PF11 = FULL SCREEN
                                PF3 = PREV SCREEN
```

Name Browse

This screen is split into two sides. The Current side contains all records with the Current Name equal to the Name entered. The Previous side contains all records with a Previous Name equal to the Name entered. The PF7 and PF8 keys are used to scroll through the Current information and the PF9 and PF10 keys are used to scroll through the Previous information. Pressing PF6 or PF11 will display an expanded screen that includes the employee's full name, the NOAC corrected, and the Organization: Assigned. (Refer to the following screen).

```
COMMAND: ________                    NPPS
NEOD000                HISTORY AUDIT MAIN MENU - AUDIT




             BROWSE BY CURRENT NAME

  SEL             NAME                 SSN       DATE   NOAC1 NOAC2  ORG
   _  SMITH JANE M                   100101009 03/29/91 002   895   AA111
   _  SMITH MARY                     100601250 01/10/91 002   721   AA111
   _  SMITH TAYLOR                   100601254 03/09/90 002   460   AA111
   _  SMITHORS MARKEL LEON           100595030 01/14/91 002   741   AA111
   _
   _
```

Name Browse - Expanded Layout

When a record is selected from one of the Browse screens or the exact record is requested from the History Audit Main Menu, NPPS displays the Perhist Audit Browse screens (refer to the following screens). Press **ENTER** to continue to the next screen, **PF6** to end the action, or **PF11** to go to a specific screen.

```
NEMD000A                          NPPS                    1 OF 11
MODE:                       PERHIST AUDIT BROWSE
-------------------------------------------------------------------------------
NAME                                                        SSN

NOAC1                        EFDATE      0          BYPASS EDIT
NOAC2                        MATUREDTE   0          SEQ          0
NOACNTE1       0             ENTRYDTE    0          ENTRYCLERK
NOACNTE2       0             UPDATEDTE   0          UPDATECLER K
AUTH1                        UPDATETIME             CORCANFLAG
AUTH2                        PREVSSN

NAME:                                   PREVIOUS NAME:
LAST                                    LAST
GEN SUFFIX                              GEN SUFFIX
FIRST                                   FIRST
MIDDLE                                  MIDDLE

-------------------------------------------------------------------------------
 PF1= HELP                     PF3= PREV SCREEN                PF5= MAIN MENU
 PF6= END ACTION               PF11= GO TO                     PF12= END
```

Perhist Audit Browse (Page 1)

```
NEMD000B                          NPPS                    2 OF 11
MODE:                       PERHIST AUDIT BROWSE
--------------------------------------------------------------------------------
NAME                                                        SSN

ADMINLEV                    BIRTHDTE      0           CURRGRDDTE    0
AGENCY                      CITIZEN                   DAYLIMIT      0
AGENCYFROM                  COMPLEV                   DEPARTDEST
AGENCYTO                    CONVENDDTE    0           DEPARTRSN
ANUIND                      COOPENTRYDTE  0           DETAILENDDTE  0
APPTNTEDTE  0               COOPFLD                   DLRLIMIT      0.00
AWDAMT      0.00            COOPLEV                   DTLDTYSTN
                            COOPRTDDTE    0           DTLGRADE      0
AWDCHK                      COOPRTSDTE    0           DTLNCC
                            COOPSCH                   DTLOCCODE
AWDTYP                      COOPYR                    DTLORGASSIGN
AWDYR                       CPP                       DTLPAYPLN
BDYR                        CREDMILSERV   0           DTLPDN
--------------------------------------------------------------------------------
 PF1= HELP                     PF3= PREV SCREEN                PF5= MAIN MENU
 PF6= END ACTION               PF11= GO TO                     PF12= END
```

Perhist Audit Browse (Page 2)

```
NEMD000C                          NPPS                    3 OF 11
MODE:                       PERHIST AUDIT BROWSE
--------------------------------------------------------------------------------
NAME                                                        SSN


      DTLNASATTL

      DTLOPMTTL

      DTYSTNNAME

      LOCALTTL

      NASATTL

      OPMTTL

--------------------------------------------------------------------------------
 PF1= HELP                     PF3= PREV SCREEN                PF5= MAIN MENU
 PF6= END ACTION               PF11= GO TO                     PF12= END
```

Perhist Audit Browse (Page 3)

```
NEMD000D                          NPPS                    4 OF 11
MODE:                       PERHIST AUDIT BROWSE
--------------------------------------------------------------------------------
NAME                                                        SSN

DTYSTN                      FLSA                      FROZENCSRS   0
DTYSTS                      FOLLOW1                   FSCDTE       0
EDLEV                       FOLLOW2                   FTELI
EMPIND                      FOLLOW3                   FUNCCLASS
EMPNO                       FOLLOW4                   FURNTEDTE    0
EODDTE        0             FOLLOW5                   GRADE        0
FACILITY                    FOLLOW6                   GRADERETN
FEGLI                       FOLLOW7                   HANDICAP
FEHB                        FOLLOW8                   HEAD-AGENCY
FEHBFULLPLAY                FOUFLD                    HIFLD
FERSCOVER                   FOULEV                    HIGRADE
FINSTM                      FOUSCH                    HILEV
FINSTMDTE     0             FOUYR                     HIPAYPLN
--------------------------------------------------------------------------------
 PF1= HELP                     PF3= PREV SCREEN                PF5= MAIN MENU
 PF6= END ACTION               PF11= GO TO                     PF12= END
```

Perhist Audit Browse (Page 4)

```
NEMD000E                          NPPS                    5 OF 11
MODE:                       PERHIST AUDIT BROWSE
--------------------------------------------------------------------------------
NAME                                                        SSN

HISCH                      NCC                         PAYPLN
HIYR                       NEWSUPBEGDTE   0            PAYPLNRETN
HRLIMIT        0           NEWSUPENDDTE   0            PAYTABLE
INSTALL                    NEXTWIGDTE     0            PDN
LASTPROMODTE   0           NNASAAPPRO                                  0
LEQDTE         0           NNSAAPROJLI                 PEFRATC
LVENTITLE                  NSCDTE         0            PEFRATCYR     0
LWOPNTEDTE     0           NSPI                        PEFRATP1
LWPNTEDTE      0           OCCODE                      PEFRATP1YR    0
MINCDE                     ORGASSIGN                   PEFRATP2
NAMEFIRST                  ORGLOC                      PEFRATP2YR
NAMEGENSUFX                PAYBASIS                    POSCHGNTEDTE  0
NAMELAST                                               POSCRIT
--------------------------------------------------------------------------------
 PF1= HELP                     PF3= PREV SCREEN                PF5= MAIN MENU
 PF6= END ACTION               PF11= GO TO                     PF12= END
```

Perhist Audit Browse (Page 5)

```
NEMD000F                          NPPS                    6 OF 11
MODE:                       PERHIST AUDIT BROWSE
--------------------------------------------------------------------------------
NAME                                                        SSN

POSOCC                      RMPAYSTAT               SALANN      0.00
POSTYPE                     RMRETIRBASIS            SALDAILY    0.00
POSTYPELOC                  RMRETIRDTE     0        SALHOURLY   0.00
PRD                         RMSVCCOMP               SECFLD
PRIORRETCOV                 RMSVCDESIG              SECLEV
PROBENDDTE    0             RMSVCNUM                SECSCH
PROJPROMO                   RMSVCPAYGRD             SECYR
PROMONTEDTE   0             RRBRANCH                SES PROB    0
PTHOURS                     RRRANK                  SEX  RETDISDTE     0
RSCDTE         0         STEP
RETENEXPDTE   0             RTD                     STEPRETN
RETOPTDTE     0             RTDGROUP                SUPIND
RETPLAN                     SABBNTEDTE     0        SUSPNTEDTE  0
--------------------------------------------------------------------------------
 PF1= HELP                     PF3= PREV SCREEN                PF5= MAIN MENU
 PF6= END ACTION               PF11= GO TO                     PF12= END
```

Perhist Audit Browse (Page 6)

```
NEMD000G                          NPPS                    7 OF 11
MODE:                       PERHIST AUDIT BROWSE
--------------------------------------------------------------------------------
NAME                                                        SSN


TENURE                        TSPSEPDTE      0           HIGPA    0.00
TENUREBEGDTE   0              TSPSTATUS                  SECGPA   0.00
TENUREENDDTE   0              TSPSTATUSDTE   0           THRGPA   0.00
THRFLD                        TSPVEST
THRLEV                        UNIONBU
THRSCH                        VETPREF
THRYR                         VETPREFRIF
TITLECDE                      VETSTATUS
TRAINDEVPGM                   WIGWENDDTE     0
TSPELIGDTE     0              WORKSCH
TSPSCDTE       0              COOPGPA        0.00
TSPSEPCODE                    FOUGPA         0.00
--------------------------------------------------------------------------------
 PF1= HELP                     PF3= PREV SCREEN                PF5= MAIN MENU
 PF6= END ACTION               PF11= GO TO                     PF12= END
```

Perhist Audit Browse (Page 7)

```
NEMD000H                          NPPS                    8 OF 11
MODE:                       PERHIST AUDIT BROWSE
--------------------------------------------------------------------------------
NAME                                                      SSN


        ORGALEVEL1

        ORGALEVEL2

        ORGALEVEL3

        ORGALEVEL4

  AWARD-GROUP-TEXT



--------------------------------------------------------------------------------
 PF1= HELP                     PF3= PREV SCREEN                PF5= MAIN MENU
 PF6= END ACTION               PF11= GO TO                     PF12= END
```

Perhist Audit Browse (Page 8)

```
NEMD000I                          NPPS                    9 OF 11
MODE:                       PERHIST AUDIT BROWSE
--------------------------------------------------------------------------------
NAME                                                      SSN

EMPL-ADJSTD-BASIC-PAY-AMT     0.00    RETENTION ALLOW               0.00
EMPL-AUO-ANL-AMT              0       EMPL-RTNTN-ALWNC-NTE-DATE     0
EMPL-AUO-PCT                  0       EMPL-RTNTN-ALWNC-PCT          0
EMPL-BASIC-PAY-AMT            0.00    SUPER-DIFF                    0.00
EMPL-BONUS-DFRNTL-BASIS-CODE          EMPL-SPRVSR-DFRNTL-PCT        0
EMPL-BONUS-RCRTMNT-AMT        0       EMPL-SRVC-AGRMNT-END-DATE     0
EMPL-BONUS-RCRTMNT-PCT        0       EMPL-STFNG-DFRNTL-ANL-AMT     0
EMPL-BONUS-RLCTN-AMT          0       EMPL-STFNG-DFRNTL-PCT         0
EMPL-BONUS-RLCTN-PCT          0       EMPL-TOT-PAY-AMT              0.00
EMPL-FRGN-LNG-ANL-AMT         0       EMPL-TIME-OFF-AWARD-HRS       0.0
EMPL-LCLTY-ADJSTMNT-ANL-AMT   0       EMPL-PRFRMNCE-RTNG-YEAR3-CODE 0
EMPL-LCLTY-ADJSTMNT-IND               EMPL-PRFRMNCE-RTNG-YEAR3-YEAR
EMPL-OTHR-PAY-AMT             0
--------------------------------------------------------------------------------
 PF1= HELP                     PF3= PREV SCREEN                PF5= MAIN MENU
 PF6= END ACTION               PF11= GO TO                     PF12= END
```

Perhist Audit Browse (Page 9)

```
NEMD000J                          NPPS                    10 OF 11
MODE:                       PERHIST AUDIT BROWSE
--------------------------------------------------------------------------------
NAME                                                        SSN

EMPL-SCH-BASIC-PAY-AMT       0.00         EMPL-AVLBLTY-PAY-ANL-AMT
EMPL-SCH-ADJST-BASIC-PAY-AMT              EMPL-SCHDL-LCLTY-ANL-AMT
EMPL-RDCTN-IN-FRC-NTE-DATE   0            EMPL-SCHDL-TOT-PAY-AMT
EMPL-LCTD-INSTLTN-CODE                    GRADE-RESET-CODE
EMPL-CRNT-RTNG-EFCTV-DATE    0            DLT-GRADE-RESET-CODE
EMPL-PRIOR1-RTNG-EFCTV-DATE  0            HIGRADE-RESET-CODE
EMPL-PRIOR2-RTNG-EFCTV-DATE  0            PEFRATC-RESET-CODE
EMPL-PRIOR3-RTNG-EFCTV-DATE  0            PEFRATP1-RESET-CODE
EMPL-SRVC-CMPTN-RTRMNT-DATE  0            PEFRATP2-RESET-CODE
EMPL-AWARD-BDGT-CODE                      EMPL-PRFMNC-RTNG-YR3-FLAG
EMPL-FERS-MRA-DATE           0            EMPL-TOA-HRS-YTD-RESET-CODE
EMPL-ARMY-LINE-NMBR-CODE                  EMPL-PCA-PAY-ANL-AMT
EMPL-ARMY-PRGRPH-CODE
--------------------------------------------------------------------------------
 PF1= HELP                      PF3= PREV SCREEN                PF5= MAIN MENU
 PF6= END ACTION                PF11= GO TO                     PF12= END
```

Perhist Audit Browse (Page 10)

```
NEMD000J                          NPPS                    11 OF 11
MODE:                       PERHIST AUDIT BROWSE
--------------------------------------------------------------------------------
NAME                                                        SSN

EMPL-CRNT-RTNG-PTRN-CODE
EMPL-PRIOR1-RTNG-PTRN-CODE
EMPL-PRIOR2-RTNG-PTRN-CODE
EMPL-PRIOR3-RTNG-PTRN-CODE
CRNT-PTRN-RESET-CODE
PRIOR1-PTRN-RESET-CODE
PRIOR2-PTRN-RESET-CODE
PRIOR3-PTRN-RESET-CODE









--------------------------------------------------------------------------------
 PF1= HELP                      PF3= PREV SCREEN                PF5= MAIN MENU
 PF6= END ACTION                PF11= GO TO                     PF12= END
```

Perhist Audit Browse (Page 11)

4.2 Payroll

```
COMMAND: ________                N P P S
NAO0000                  PAYROLL MAIN MENU - MMPAY
 ------------------------------------------------------------------------------
                   CENTER ID:        NPPS VERSION:

                   ENTER ONE OF THE FOLLOWING SELECTIONS: _


                           1 - TIME & ATTENDANCE

                           2 - MER

                           3 - TABLE PROCESSING

                           4 - VOUCHERING

                           5 - NON-PERSONNEL ACTION CASH AWARDS

 ------------------------------------------------------------------------------
  PF1= HELP                  PF5= MAIN MENU                    PF12= END
```

Payroll Main Menu (MMPAY)

DESCRIPTION AND EXECUTION

The Payroll Main Menu (MMPAY) displays the five main components of the Payroll subsystem of NPPS. This subsystem provides the capability to process payroll employee actions and to compute employee pay. These components are grouped into three logical sections for payroll processes: Payroll Actions (MER), Payroll Computations (Time and Attendance and Vouchering), Payroll Table Processing, and Non-personnel Action Cash Award.

4.2.1 Description and Execution - CPO Center

```
COMMAND: ________                N P P S
NAO0000                   PAYROLL MAIN MENU - MMPAY
 ------------------------------------------------------------------------------
                    CENTER ID:        NPPS VERSION:

                    ENTER ONE OF THE FOLLOWING SELECTIONS: _


                            1 - TIME & ATTENDANCE

                            2 - MER

                            3 - TABLE PROCESSING

                            4 - VOUCHERING

                            5 - NON-PERSONNEL ACTION CASH AWARDS

 ------------------------------------------------------------------------------
  PF1= HELP                  PF5= MAIN MENU                    PF12= END
```

Payroll Main Menu (MMPAY)

When the Payroll Main Menu (MMPAY) is accessed using the CPO USER-ID, CENTER-ID is an open field. The CPO User can switch from one Center to another on this screen by inputting the CENTER-ID. When the cursor is put on the CENTER-ID field and PF1 is used, a window is displayed with a pick list of Centers from NPPS Core Table TINSTAL1.

```
COMMAND: ________                N P P S
NAO0000                   PAYROLL MAIN MENU - MMPAY
 ------------------------------------------------------------------------
                    CENTER ID
                    ENTER ONE
                        -------------------------------
                        |ENTER THE NUMBER OF THE SITE |
                        |    YOU WISH TO ACCESS       |
                      1 |        1  1000              |
                      2 |        2  2100              |
                      3 |        3  2200              |
                      4 |        4  2300              |
                      5 |        5  2400              |
                      6 |        6  5100              |
                      7 |        7  6200              |
                      8 |        8  6400              |
                      9 |        9  7200              |
                     10 |       10  7600              |
 -----------------------|            __ SELECTION     |---------- ----
  PF1= HELP             -------------------------------           12= END
```

<u>Step to Reach Payroll Main Menu</u>

1. At the Main Menu, select **2** - Payroll.

4.2.2 Payroll Actions (MER) Menu

```
COMMAND: ________                    NPPS
NAO1000            MASTER EMPLOYEE RECORD DATA ENTRY MENU - MMER                2
 ---------------------------------------------------------------------------


                    ENTER ONE OF THE FOLLOWING SELECTIONS: _


                          1 - MASTER SELECTION MER MENU
                          2 - EMPLOYEE LOCATION MENU
                          3 - CURRENT PP PAY ACTIONS MENU
                          4 - LEAVE HOURS ADJUSTMENTS MENU
                          5 - DOLLAR ACCUMULATIONS ADJUSTMENTS MENU
                          6 - MER CONTROLS AND QUERIES MENU
                          7 - PAYROLL SUSPENSE MAINTENANCE QUERY
                          8 - MASS AND GLOBAL TRANSACTIONS MENU
                          9 - START NEW EMPLOYEE ADD CHAIN


---------------------------------------------------------------------------
 PF1= HELP          PF3= PREV SCREEN   PF5= MAIN MENU        PF12= END
```

Master Employee Record Data Entry Menu (MMER)

DESCRIPTION AND EXECUTION

The Master Employee Record Data Entry Menu (MMER) is used to select other submenus in order to navigate to the required payroll actions template. For the remainder of the Payroll Actions (MER) section of the UOG, the first option from this menu, Master Selection MER Menu, will be discussed. This menu lists all 60 possible payroll actions on three screens. For further reference, the Master Selection MER Menu screens are displayed on proceeding pages.

<u>Steps to Reach the Master Employee Record Data Entry Menu</u>

1. At the Main Menu, select **2** - Payroll.
2. At the Payroll Main Menu, select **2** - MER.

```
COMMAND: ________                    NPPS
NAO1001          MASTER SELECTION MER MENU - MSTM       1 OF 3
--------------------------------------------------------------------------------
                  ENTER ONE OF THE FOLLOWING SELECTIONS: __

      DEDUCTIONS                                 PAY AND DEDUCTIONS ADJUSTMENTS
 1  - VOLUNTARY SAVINGS ALLOTMENTS        15 - FLEXIBLE SPENDING ACCOUNT
 2  - TSP LOAN REPAYMENT ALLOTMENTS       16 - EARNINGS AND REFUNDS ADJ
 3  - BOND DEDUCTIONS                     17 - COLA & FOREIGN DIFFERENTIAL
 4  - NEBA LIFE INSURANCE                 18 –CURRENT TSP ADJUSTMENTS
 5  - MILITARY DEPOSIT DEDUCTIONS         19 - EMPLOYEE INSURANCE ADJUSTMENTS
 6  - MISCELLANEOUS VOLUNTARY DEDUCTIONS  20 - OTHER DEDUCTIONS ADJUSTMENTS
 7  - THRIFT SAVINGS PLAN                 21 - LUMP SUM LEAVE/REACTIVATIONS
 8  - FEDERAL & STATE TAXES               22 – PCS TRAVEL ADJUSTMENT B/W
 9  - CITY & COUNTY TAXES
 10 - BANKRUPTCY PAYMENTS                 LEAVE ADJUSTMENTS
 11 - INDEBTEDNESS TO U.S.                23 - ANNUAL LEAVE
 12 - CHILD SUPPORT PAYMENTS              24 - COMPENSATORY TIME
 13 - COMMERCIAL GARNISHMENTS             25 - RELIGIOUS COMP TIME
 14 – LONG TERM CARE
--------------------------------------------------------------------------------
 PF1= HELP          PF3= PREV SCREEN   PF5= MAIN MENU        PF7= BACKWARD
 PF8= FORWARD       PF12= END
```

Master Selection MER Menu (Page 1)

```
COMMAND: ________                    NPPS
NAO1001          MASTER SELECTION MER MENU - MSTM       2 OF 3
--------------------------------------------------------------------------------
                  ENTER ONE OF THE FOLLOWING SELECTIONS: __

 27 - LEAVE WITHOUT PAY HOURS             38 - YTD EARNINGS & PREM HRS WORKED
 28 - RESTORED LEAVE                      39 - YTD LEAVE COST
 29 - SICK LEAVE                          40 - YTD DEDUCTIONS
 30 - CONTINUATION OF PAY LEAVE           41 - YTD RETIREMENT ADJUSTMENTS
 31 - DONATED ANNUAL LEAVE                42 - YTD DEDUCTIONS TSP
 32 - HOME LEAVE                          43 - APPOINTMENT LIMITATIONS
 33 - OTHER LEAVE USED YTD                44 - TRANSFER IN DATA
 34 - TIME OFF AWARDS
 35 - EXTENDED COMPENSATORY TIME               QUERY
                                          45 - SAVINGS ALLOTMENT SUMMARY
      YTD                                 46 - OLD VERSUS NEW NORMALS
 36 - FORMER STATE TAXES                  47 - PAY PERIOD YTD ADJUSTMNT
 37 - FORMER CITY & COUNTY TAXES          48 - BONDS CONTROL         (CONT.)
--------------------------------------------------------------------------------
 PF1= HELP          PF3= PREV SCREEN   PF5= MAIN MENU        PF7= BACKWARD
```

Master Selection MER Menu (Page 2)

```
COMMAND: ________                    NPPS
NAO1001          MASTER SELECTION MER MENU - MSTM       3 OF 3
--------------------------------------------------------------------------------
                    ENTER ONE OF THE FOLLOWING SELECTIONS: __

 49 - PAYROLL REGISTER ADJUSTMENTS     61 - TRANSPORTATION FRINGE BENEFITS SUSPEND
 50 - PERSONNEL DATA                   62 - PAYROLL SUSPENSE MAINT QUERY
 51 - NEW EMPLOYEE LIST                        MASS
 52 - TERMINATED EMPLOYEE LIST         63 - CFC DEDUCTION MASS
 53 - AWARDS CONTROL                   64 - T & A DISTRIBUTION MASS
 54 - TOUR OF DUTY NORMALS             65 - NEW PAYBLOCK MASS UPDATE
 55 - PAY PERIOD HISTORY QUERY         66 - DONATED LEAVE MASS
 56 - PAY PERIOD HISTORY               67 - GLOBAL TRANSACTIONS, FIN INST
      MISCELLANEOUS                    68 - GLOBAL TRANSACTIONS, TA DIST CDE
 57 - EMPLOYEE T & A DISTRIBUTION      69 - MASS AWARD PROCESSING
 58 - EMP MAILING ADDRESS & NET PAY    70 - MASS EXTENDED COMPENSATORY TIME
 59 - SPOUSAL HEALTH BENEFITS
 60 – STUDENT LOAN REPAYMENT
--------------------------------------------------------------------------------
 PF1= HELP          PF3= PREV SCREEN   PF5= MAIN MENU        PF7= BACKWARD
 PF8= FORWARD       PF12= END
```

Master Selection MER Menu (Page 3)

Throughout the Payroll Actions section, special sets of functions and PF keys are available. Though not every function and PF key appears on all screens, the complete sets are listed below so that you may become familiar with them.

<u>Use of Functions</u>

A=Add Chain	Allows you to add information about a new employee through a series of temporarily linked screens. The linkage ceases to exist when you change the Add function to any other function.
C=Change	Allows you to change information about an existing employee.
N=Name Search	Allows you to enter an employee's name or partial name and retrieve the SSN. If more than one employee satisfies the name search, a listing of all employees with that name will be displayed on the screen. You may then select the specified employee, and NPPS will enter the SSN on the screen so that you may continue as if you had entered the SSN yourself.
R=Retrieve	Allows you to retrieve information from an existing employee's master record so that you may view the information on the screen. Data must be retrieved before it can be changed.

S=Suspend	Allows you to enter information for an existing employee in advance of the date when you want the information to become part of the master employee record. This information is temporarily placed in the suspense file and will be applied to the employee's record when matured. This date is referred to as the Effective Date. The Effective Date is usually the first day of the pay period in which the action should be applied.
X=Cancel	Allows you to place an “X” in the Cancel field to cancel information pertaining to an existing employee.

Use of PF Keys

The four standard PF keys which appear on most menus and templates are PF1=Help, PF3= Previous Screen, PF5=Main Menu, and PF12=End. Two additional keys which allow you to move between the pages of a template that is composed of more than one screen are PF7=Backward and PF8=Forward.

Four additional keys allow you to query display screens so that you can confirm the results of your payroll actions. These four PF keys are PF2=QALLOT (Savings Allotment Summary), PF4=QNORM (Old vs. New Normals), PF6=QYTDADJ (Pay Period YTD Adjustments), and PF9=QREG (Payroll Register).

Description of Data Processing Results and Output

Most payroll actions result in control reports for normals controls, gross-to-net controls, YTD controls, or allotment controls as well as employee record updates and transaction history updates.

4.2.2.1 Deductions

NPPS provides the capability to maintain the employee information necessary to compute the following voluntary and mandatory biweekly deductions from gross earnings.

Voluntary Deductions

- Voluntary Savings Allotments
- TSP Loan Repayment Allotments
- Bond Deductions
- NEBA Life Insurance
- Military Deposit Deductions
- Miscellaneous Voluntary Deductions
- TSP Deductions

Mandatory Deductions

- Federal and State Taxes
- City Taxes
- Bankruptcy Payment
- Indebtedness to the US Government
- Child Support Payments
- Commercial Garnishments

4.2.2.1.1 Voluntary Savings Allotments

```
 *   SPECIFY SSN OR FUNCTION = N 'NAME SEARCH'

COMMAND: ________                    NPPS
NAO1231              VOLUNTARY SAVINGS ALLOTMENTS - ALLOT
 ---------------------------------------------------------------------------
      SSN      PAYBLK    FUNC    LAST NAME                  FIRST NAME      I
  ___ __ ____              R     ______________________     ____________    _
                                                                ACCT    ENTER X
                 ROUTING#           ACCOUNT#           AMOUNT   TYPE   TO CANCEL
  ALLOTMENT 1    _________        __________________     _____     _        _
        FIN. INST. NAME:
 ADDRESS:
 CITY:                                      STATE:       ZIP:
                                                                ACCT
                 ROUTING#           ACCOUNT#           AMOUNT   TYPE
  ALLOTMENT 2    _________        __________________     _____     _        _
        FIN. INST. NAME:
 ADDRESS:
 CITY:                                      STATE:       ZIP:
 ---------------------------------------------------------------------------
 FUNCTIONS: A= ADD CHN   C= CHANGE   N= NAME SEARCH   R= RETRIEVE   S= SUSPEND
  PF1= HELP          PF2= QALLOT          PF3= PREV SCREEN     PF4= QNORM
  PF5= MAIN MENU     PF9= QREG            PF12= END
```

Voluntary Savings Allotments (ALLOT)

DESCRIPTION AND EXECUTION

The Voluntary Savings Allotments (ALLOT) template is used to set up and maintain employee deductions for two separate savings allotments.

<u>Steps to Reach Voluntary Saving Allotments</u>

1. At the Main Menu, select **2** - Payroll.
2. At the Payroll Main Menu, select **2** - MER.
3. At the Master Employee Record Data Entry Menu, select **1** - Master Selection MER Menu.
4. At the Master Selection MER Menu, select **1** - Voluntary Savings Allotments.

4.2.2.1.2 TSP Loan Repayment Allotments

```
COMMAND: ________                    NPPS
NAO1232             TSP LOAN REPAYMENT ALLOTMENTS - LOAN
--------------------------------------------------------------------------------

     SSN      PAYBLK   FUNC          LAST NAME                FIRST NAME    I
___ __ ____            _            ______________________  ____________  _

                                   LOAN 1                                TYPE
                                                                         X TO
ROUTING#         ACCOUNT#             ALLOT AMT         ACCUM AMT       CANCEL
_________     ________________      ________0.00             0.00        _

                                   LOAN 2

ROUTING#         ACCOUNT#             ALLOT AMT         ACCUM AMT       CANCEL
_________     ________________      ________0.00             0.00        _

--------------------------------------------------------------------------------
FUNCTIONS:  A= ADD CHN   C= CHANGE   N= NAME SEARCH   R= RETRIEVE   S= SUSPEND
 PF1= HELP          PF2= QALLOT          PF3= PREV SCREEN      PF4= QNORM
 PF5= MAIN MENU     PF9= QREG            PF12= END
```

TSP Loan Repayment Allotments (LOAN)

DESCRIPTION AND EXECUTION

The TSP Loan Repayment Allotments (LOAN) template is used to set up and maintain employee deductions for two separate allotments for TSP loan repayment. Loan deductions cease automatically when the accumulated amount equals the loan face amount, or when "X" is input into the Type X to Cancel field for each deduction.

<u>Steps to Reach TSP Loan Repayment Allotments</u>

1. At the Main Menu, select **2** - Payroll.
2. At the Payroll Main Menu, select **2** - MER.
3. At the Master Employee Record Data Entry Menu, select **1** - Master Selection MER Menu.
4. At the Master Selection MER Menu, select **2** - TSP Loan Repayment Allotments.

4.2.2.1.3 Bond Deductions

```
 *   NO BOND DATA EXISTS FOR EMPLOYEE

COMMAND: ________                  NPPS
NAO1233                    BOND DEDUCTIONS - BOND
      SSN    PAYBLK  BOND#   FUNC     LAST NAME                FIRST NAME    I
 ___ __ ____   __      __      R      ______________________   ____________  _
STATUS:          BOND TO BE PURCHASED:      BOND DATE: 0000  BOND SERIES:
DENOMINATION:  ____0        REQ DED: ___0.00     BALANCE:    0.00
PURCHASE PRICE:    0.00     CUR DED:    0.00     REFUND:  ___0.00
  OWNER SSN / CODE ( OR, POD) - CO-OWNER BENEFICIARY:   (PURCHASE SEQUENCE)
      (1)            (2)            (3)            (4)            (5)
   _________      _________      _________      _________      _________
 ___ _________  ___ _________  ___ _________  ___ _________  ___ _________
      (6)            (7)            (8)            (9)            (10)
   _________      _________      _________      _________      _________
 ___ _________  ___ _________  ___ _________  ___ _________  ___ _________
--------------------------------------------------------------------------------
TOTAL #BONDS:   0       TOT REQ DED:     0.00    **** ALL BOND # ASSIGNED ****
TOTAL #OWNERS:  0       TOT CUR DED:     0.00
TOTAL BALANCE:    0.00  TOTAL REFUND:    0.00
--------------------------------------------------------------------------------

FUNC: A= ADD CHN  C= CHANGE  D= DELETE  N= NAME SEARCH  R= RETRIEVE  S= SUSPEND
 PF1= HELP           PF2= OWNERS        PF3= PREV SCREEN      PF4= QNORM
 PF5= MAIN MENU      PF9= QREG          PF12= END
```

Bond Deductions (BOND)

```
 COMMAND: ________                  NPPS
 NAO1233B                   BOND OWNERS - BOWN
--------------------------------------------------------------------------------
EMPLOYEE SSN:                    NAME:
BOND OWNER SSN: 000 00 0000          FUNC: _      BOND:
OWNER NAME:     ____________________________
ADDRESS:        ____________________________________
                ____________________________________
CITY:           _________________   STATE: ___     ZIP: _____ - ____

CO-OWNER/BEN CODE: ___
NAME:               ____________________________        I.D.:  000 00 0000
--------------------------------------------------------------------------------
    OWNER SSN   CODE   CO BEN I.D.           OWNER SSN   CODE   CO BEN I.D.




--------------------------------------------------------------------------------
FUNCTION:   A= ADD        C= CHANGE    D= DELETE    R= RETRIEVE    S= SUSPEND
 PF1= HELP    PF3= PREV SCREEN    PF7= BACKWARD    PF8= FORWARD    PF12= END
```

Bond Owners (BOWN)

DESCRIPTION AND EXECUTION

The Bond Deductions (BOND) template is used to set up and maintain a bond purchase program for an employee. An employee may purchase Series EE or Series I Bonds. Each employee may purchase up to ten bonds. The accompanying Bond Owners (BOWN) template allows for the input and display of complete information regarding the bond owner and co-owner for each bond purchased. You may enter a maximum of ten bonds. Series EE Bonds may be fixed or rotating. Series I Bonds may only be fixed. A fixed bond has only one owner. A rotating bond may have from two to ten owners, but the total number of bond owners the system can handle is limited to ten. A rotating bond is issued to each owner successively beginning with the first owner. The Refund field is used only when a bond deduction is terminating.

Steps to Reach Bond Deductions

1. At the Main Menu, select **2** - Payroll.
2. At the Payroll Main Menu, select **2** - MER.
3. At the Master Employee Record Data Entry Menu, select **1** - Master Selection MER Menu.
4. At the Master Selection MER Menu, select **3** - Bond Deductions.

Note: Bond Owners (BOWN) can only be reached by first accessing a record at the Bond Deductions template and then pressing PF2.

Bond processing allows you to add a bond, change the information for an existing bond, change the information for an existing owner/co-owner combination, delete a bond, and delete an inactive owner/co-owner combination. Each of these functions is illustrated in the following examples.

```
*   NO BOND OWNERS ESTABLISHED YET

   COMMAND: ________                    NPPS
   NAO1233                     BOND DEDUCTIONS - BOND
         SSN    PAYBLK  BOND#   FUNC     LAST NAME                FIRST NAME    I
    100 00 0056  01     1_      C        JONES_______              ERICK__      L
   STATUS:          BOND TO BE PURCHASED:      BOND DATE: 0000  BOND SERIES:
   DENOMINATION:    100        REQ DED: __10.00     BALANCE:    0.00
   PURCHASE PRICE:    0.00     CUR DED:    0.00     REFUND:  ___0.00
     OWNER SSN / CODE ( OR, POD) - CO-OWNER BENEFICIARY:   (PURCHASE SEQUENCE)
         (1)             (2)             (3)             (4)             (5)
      100000056       _________       _________       _________       _________
    POD _________   ___ _________   ___ _________   ___ _________   ___ _________
         (6)             (7)             (8)             (9)             (10)
     _________       _________       _________       _________       _________
    ___ _________   ___ _________   ___ _________   ___ _________   ___ _________
   ------------------------------------------------------------------------------
   TOTAL #BONDS:   0       TOT REQ DED:     0.00    **** ALL BOND # ASSIGNED ****
   TOTAL #OWNERS:  0       TOT CUR DED:     0.00
   TOTAL BALANCE:    0.00  TOTAL REFUND:    0.00
   ------------------------------------------------------------------------------
   FUNC: A= ADD CHN  C= CHANGE  D= DELETE  N= NAME SEARCH  R= RETRIEVE  S= SUSPEND
    PF1= HELP           PF2= OWNERS        PF3= PREV SCREEN      PF4= QNORM
    PF5= MAIN MENU      PF9= QREG          PF12= END
```

Adding a Fixed Bond (Page 1)

Steps to Add a Fixed Bond

In the first example, a fixed bond was added for Erick Jones. Since Mr. Jones did not have any bonds established, this bond is bond number 1. Mr. Jones is the owner and his son, James, is the beneficiary. NPPS generated an ID for James which is part of the owner/beneficiary combination for this bond. The bond denomination is $100 and the required deduction is $10.00 per pay period.

1. Navigate to the bond template. Enter the SSN of the employee who wants to add a fixed bond and the bond number; you must choose a number which is not already assigned. Refer to the All Bond # Assigned area in order to view which bond numbers are already assigned. Press **ENTER**. NPPS will display the message, NO BOND OWNERS ESTABLISHED YET.

2. Change the FUNC to "C" for change. If you are adding the bond via the new employee add chain, you may leave the function as "A" for add chain. Enter EE for Series EE Bonds. Enter I followed by a space for Series I Bonds. Enter the Denomination, Required Deduction, and owner SSN. If the employee has identified a co-owner or beneficiary, you must enter a code immediately below the owner SSN. The code for co-owner is "OR" and the code for beneficiary is "POD." Then you may enter the SSN of the co-owner beneficiary in the blank to the right of the co-owner beneficiary code. If you do not know the SSN of the co-owner beneficiary, you may generate your own installation-unique ID number (which should have at least three leading zeros so as not to be confused with a valid SSN) or you can leave this item blank. If you do not enter a co-owner beneficiary SSN or ID, NPPS generates an ID for you. You will view this system-generated ID when you proceed to the Bond Owner template. You must enter a

deduction of at least $3.75 and you must have at least one bond owner for each bond. Press **ENTER**.

```
 *  NEW BOND OWNER READY FOR ADD
 COMMAND: ________                    NPPS
 NAO1233                       BOND OWNERS - BOWN
-------------------------------------------------------------------------------
EMPLOYEE SSN: 100 00 0060       NAME: JONES                    ERICK        L
BOND OWNER SSN: 100 00 0056          FUNC: A      BOND:     1
OWNER NAME:     ERICK JONES_________________
ADDRESS:        1000 SEA HAWK LANE__________________
                ______________________________
CITY:           WEBSTER_________   STATE: TX_     ZIP: 77598 ____

CO-OWNER/BEN CODE: POD
NAME:              JAMES JONES_________________        I.D.:  000 00 0001
-------------------------------------------------------------------------------
    OWNER SSN   CODE   CO BEN I.D.           OWNER SSN   CODE   CO BEN I.D.




-------------------------------------------------------------------------------
FUNCTION:   A= ADD        C= CHANGE    D= DELETE    R= RETRIEVE    S= SUSPEND
 PF1= HELP  PF3= PREV  PF7= BKWD    PF8= FRWD    PF9= SCROLL ALL   PF12= END
```

Adding a Fixed Bond (Page 2)

3. NPPS displays the Bond Owner template with the message, NEW BOND OWNER READY TO ADD. Enter the owner name, street address, city, state, and zip. Also enter the name of the co-owner beneficiary if you indicated one on the Bond template. Note that the co-owner beneficiary code is automatically displayed by NPPS. In addition, NPPS automatically displays the SSN or ID you entered for the co-owner beneficiary. If you did not enter a SSN or ID, NPPS now displays the ID it automatically generated for you. Press **ENTER**. NPPS displays the new owner/co-owner beneficiary combination at the bottom of the screen and you receive the message, ALL CHANGES HAVE BEEN MADE....PRESS ENTER TO COMPLETE UPDATE.

```
COMMAND: ________                    NPPS
NAO9201                BOWN MULTIPLE MESSAGE DISPLAY



    SSN       PAYBLK     FUNC       LAST NAME               FIRST NAME    I
100 00 0056     01         R        JONES_________________  ERICK_____    L

*   PAYBLOCK 01 SSN 100-00-0056 CHANGED IN MASTER EMPLOYEE RECORD
*   NORMAL RECALCULATION HAS BEEN DONE









PF1= HELP         PF3= PREV SCREEN       PF5= MAIN MENU        PF7= BACKWARD
PF8= FORWARD      PF12= END
PF4= QNORM        PF9= QREG
```

Adding a Fixed Bond (Page 3)

4. NPPS displays the Bond Owner Multiple Message screen which states that the employees master record has been updated and the normal recalculations have been done. You may view the QNORM template in order to confirm that the recalculations have been performed. Press **PF3** if you want to view the Bond template.

```
COMMAND: ________                    NPPS
NAO1233                    BOND DEDUCTIONS - BOND
      SSN     PAYBLK  BOND#   FUNC     LAST NAME                FIRST NAME    I
  100 00 0056    01     1_      R      JONES_______              ERICK__       L
 STATUS:          BOND TO BE PURCHASED:      BOND DATE: 0000  BOND SERIES:
 DENOMINATION:    100          REQ DED: __10.00     BALANCE:    0.00
 PURCHASE PRICE: 50.00       CUR DED:    0.00     REFUND:  ___0.00
   OWNER SSN / CODE ( OR, POD) - CO-OWNER BENEFICIARY:   (PURCHASE SEQUENCE)
       (1)             (2)             (3)             (4)             (5)
    100000056       _________       _________       _________       _________
  POD 000000001   ___ _________   ___ _________   ___ _________   ___ _________
       (6)             (7)             (8)             (9)             (10)
    _________       _________       _________       _________       _________
  ___ _________   ___ _________   ___ _________   ___ _________   ___ _________
 ---------------------------------------------------------------------------------
 TOTAL #BONDS:   1       TOT REQ DED:    10.00    **** ALL BOND # ASSIGNED ****
 TOTAL #OWNERS:  1       TOT CUR DED:     0.00      1
 TOTAL BALANCE:  0.00    TOTAL REFUND:    0.00
 ---------------------------------------------------------------------------------

 FUNC: A= ADD CHN  C= CHANGE  D= DELETE  N= NAME SEARCH  R= RETRIEVE  S= SUSPEND
  PF1= HELP           PF2= OWNERS        PF3= PREV SCREEN      PF4= QNORM
  PF5= MAIN MENU      PF9= QREG          PF12= END
```

Adding a Fixed Bond (Page 4)

5. The Bond template displays the newly added bond. NPPS automatically calculates the Purchase Price for Series EE bonds. The purchase price for Series I bonds is the same as the denomination amount. Any co-owner beneficiary ID automatically generated by NPPS is displayed on the Bond template. In addition, the Total Number of Series EE and Series I Bonds, Total Required Deductions, Total Number of Owner/Co-owner Beneficiary combinations, and All Bond Number Assigned fields are updated.

Steps to Add a Rotating Bond

Series I bonds cannot have rotating owners. In the following example, a rotating bond was added for Erick Jones. Since Mr. Jones had a bond assigned the number 1, this bond is bond number 2. Mr. Jones is the owner and his three grandchildren are the co-owners. As a result, this bond has three owner/co-owner combinations. The bond denomination is $50 and the required deduction is $25.00 per pay period. Each pay period, one bond will be purchased for the owner/co-owner combination in the position marked as "1." During initialization, the owner/co-owner combination which received the bond for the prior pay period, will rotate to the end of the line and each additional owner/co-owner combination will move forward one position. The rotation does not occur until the owner/co-owner combination in position 1 receives a bond and the bond is not attached to a given owner/co-owner combination until it is purchased. Therefore, the outstanding balance of a cancelled bond always belongs to the employee.

```
 *   NO BOND OWNERS ESTABLISHED YET

COMMAND: ________                    NPPS
NAO1233                    BOND DEDUCTIONS - BOND
      SSN    PAYBLK  BOND#   FUNC     LAST NAME                FIRST NAME    I
  100 00 0056  01     2_      C        JONES_______              ERICK__      L
 STATUS:          BOND TO BE PURCHASED:      BOND DATE: 0000  BOND SERIES:
 DENOMINATION:   50          REQ DED: __25.00     BALANCE:    0.00
 PURCHASE PRICE:    0.00     CUR DED:    0.00     REFUND:  ___0.00
   OWNER SSN / CODE ( OR, POD) - CO-OWNER BENEFICIARY:   (PURCHASE SEQUENCE)
       (1)            (2)            (3)            (4)            (5)
    100000056       100000056       100000056       _________      _________
  OR_ 100000100   OR_ 100000200   OR_ 100000300   ___ _________  ___ _________
       (6)            (7)            (8)            (9)            (10)
    _________      _________      _________      _________      _________
  ___ _________  ___ _________  ___ _________  ___ _________  ___ _________
 ------------------------------------------------------------------------------
 TOTAL #BONDS:   1       TOT REQ DED:    10.00    **** ALL BOND # ASSIGNED ****
 TOTAL #OWNERS:  1       TOT CUR DED:     0.00      1
 TOTAL BALANCE:    0.00  TOTAL REFUND:    0.00
 ------------------------------------------------------------------------------
 FUNC: A= ADD CHN  C= CHANGE  D= DELETE  N= NAME SEARCH  R= RETRIEVE  S= SUSPEND
  PF1= HELP           PF2= OWNERS        PF3= PREV SCREEN      PF4= QNORM
  PF5= MAIN MENU      PF9= QREG          PF12= END
```

Adding a Rotating Bond (Page 1)

1. Navigate to the bond template. Enter the SSN of the employee and the bond number. Press **ENTER**. NPPS will display the message, NO BOND OWNERS ESTABLISHED YET.
2. Change the FUNC to "C." If you are adding the bond via the new employee add chain, you may leave the function as "A" for add chain. Enter the Denomination, Required Deduction, and owner SSN for each owner/co-owner beneficiary combination. If the employee has identified a co-owner or beneficiary for one or more of the owner(s), you must enter a code immediately below the corresponding owner SSN. The code for co-owner is "OR" and the code for beneficiary is "POD." Then enter the SSN of the co-owner beneficiary in the blank to the right of the co-owner beneficiary code.

(For further details, see Steps to Adding a Fixed Bond.) You must enter a deduction of at least $3.75 and you must have at least one bond owner for each bond. Press **ENTER**.

```
 * ADDRESS FOR OWNER 100000056 HAS BEEN ADDED
  *  ALL CHANGES HAVE BEEN MADE....PRESS ENTER TO COMPLETE UPDATE
  COMMAND: ________                    NPPS
NAO1233                       BOND OWNERS - BOWN
 ------------------------------------------------------------------------------
 EMPLOYEE SSN: 100 00 0056       NAME: JONES                    ERICK        L
 BOND OWNER SSN: 100 00 0056          FUNC: A      BOND:     2
 OWNER NAME:     ERICK JONES_________________
 ADDRESS:        1000 SEA HAWK LANE__________________
                 ____________________________________
 CITY:           WEBSTER_________   STATE: TX_     ZIP: 77598 ____

 CO-OWNER/BEN CODE: OR_
 NAME:              JANE JONES_________________        I.D.:  100 00 0300
 ------------------------------------------------------------------------------
     OWNER SSN   CODE   CO BEN I.D.           OWNER SSN   CODE   CO BEN I.D.
    100-00-0056   POD   000-00-0001          100-00-0056   OR    100-00-0100
    100-00-0056   OR    100-00-0200          100-00-0056   OR    100-00-0300



 ------------------------------------------------------------------------------
 FUNCTION:   A= ADD        C= CHANGE    D= DELETE    R= RETRIEVE    S= SUSPEND
  PF1= HELP  PF3= PREV  PF7= BKWD    PF8= FRWD    PF9= SCROLL ALL   PF12= END
```

Adding a Rotating Bond (Page 2)

3. NPPS displays the Bond Owner template for the owner/co-owner combination you enter in position one. Enter the owner name, street address, city, state, and zip. Also enter the name of the co-owner beneficiary if you indicated one on the Bond template. Note that the co-owner beneficiary code is automatically displayed by NPPS. In addition, NPPS automatically displays the SSN or ID you entered for the co-owner beneficiary. Press **ENTER**. NPPS automatically displays the next owner/co-owner combination you specified and you must supply the same types of information you provided for the first owner co-owner combination. The process continues until you have provided the required information for all the owner/co-owner combinations identified on the Bond template. As each new combination is added, NPPS displays the new owner/co-owner beneficiary combination at the bottom of the screen. After the data for each owner co-owner combination is entered, the message ALL CHANGES HAVE BEEN MADE....PRESS ENTER TO COMLETE UPDATES will be displayed. When the data for the last owner co-owner combination has been made, the updates will be completed.

```
COMMAND: ________                    NPPS
NAO9201                BOWN MULTIPLE MESSAGE DISPLAY



    SSN       PAYBLK     FUNC       LAST NAME                FIRST NAME    I
100 00 0056     01         R        JONES_________________   ERICK_____    L

*   PAYBLOCK 01 SSN 100-00-0056 CHANGED IN MASTER EMPLOYEE RECORD
*   NORMAL RECALCULATION HAS BEEN DONE









PF1= HELP         PF3= PREV SCREEN       PF5= MAIN MENU        PF7= BACKWARD
PF8= FORWARD      PF12= END
PF4= QNORM        PF9= QREG
```

Adding a Rotating Bond (Page 3)

4. NPPS displays the Bond Owner Multiple Message screen which states that the employees master record has been updated and the norm recalculations have been done. You may view the QNORM template in order to confirm that the recalculations have been performed. Press **PF3** if you want to view the Bond template.

```
COMMAND: ________                    NPPS
NAO1233                     BOND DEDUCTIONS - BOND
      SSN     PAYBLK  BOND#   FUNC     LAST NAME                FIRST NAME    I
  100 00 0056    01     2_      C        JONES_______            ERICK__     L
 STATUS:          BOND TO BE PURCHASED:      BOND DATE: 0000  BOND SERIES:
 DENOMINATION:   50          REQ DED: __25.00     BALANCE:    0.00
 PURCHASE PRICE:  25.00      CUR DED:    0.00     REFUND:  ___0.00
   OWNER SSN / CODE ( OR, POD) - CO-OWNER BENEFICIARY:   (PURCHASE SEQUENCE)
       (1)             (2)             (3)             (4)             (5)
    100000056       100000056       100000056       _________       _________
  OR_ 100000100   OR_ 100000200    OR_ 100000300   ___ _________   ___ _________
       (6)             (7)             (8)             (9)             (10)
    _________       _________       _________       _________       _________
  ___ _________   ___ _________   ___ _________   ___ _________   ___ _________
 ------------------------------------------------------------------------------
 TOTAL #BONDS:   0       TOT REQ DED:    35.00    **** ALL BOND # ASSIGNED ****
 TOTAL #OWNERS:  4       TOT CUR DED:     0.00      1  2
 TOTAL BALANCE:  0.00    TOTAL REFUND:    0.00
 ------------------------------------------------------------------------------

 FUNC: A= ADD CHN  C= CHANGE  D= DELETE  N= NAME SEARCH  R= RETRIEVE  S= SUSPEND
  PF1= HELP           PF2= OWNERS        PF3= PREV SCREEN      PF4= QNORM
  PF5= MAIN MENU      PF9= QREG          PF12= END
```

Adding a Rotating Bond (Page 4)

5. The Bond template displays the newly added bond. NPPS automatically calculates the Purchase Price. Any co-owner beneficiary IDs automatically generated by NPPS are displayed on the Bond template. In addition, the Total Number of Series EE and Series I Bonds, Total Required Deductions, Total Number of Owner/Co-owner Beneficiary combinations, and All Bond Numbers Assigned fields are updated.

BOND UPDATES WHICH NPPS PERFORMS DURING T&A PROCESSING

When Mr. Jones' T&A is processed, NPPS updates the Bond template to indicate that he now has a Total Current Bond Deduction of $35.00 with an Total Balance of $10.00. The $25.00 difference is applied to the purchase of one number 2 bond for the first owner/co-owner combination.

```
COMMAND: ________                    NPPS
NAO1233                     BOND DEDUCTIONS - BOND
      SSN     PAYBLK  BOND#   FUNC     LAST NAME                FIRST NAME    I
  100 00 0056    01     2_      R        JONES_______            ERICK__       L
 STATUS:          BOND TO BE PURCHASED: YES  BOND DATE: 1289  BOND SERIES:
 DENOMINATION:   50          REQ DED: __25.00     BALANCE:    0.00
 PURCHASE PRICE:  25.00      CUR DED:   25.00     REFUND:  ___0.00
   OWNER SSN / CODE ( OR, POD) - CO-OWNER BENEFICIARY:   (PURCHASE SEQUENCE)
       (1)             (2)             (3)             (4)             (5)
    100000056       100000056       100000056       _________       _________
  OR_ 100000100   OR_ 100000200    OR_ 100000300   ___ _________   ___ _________
       (6)             (7)             (8)             (9)             (10)
   _________       _________       _________       _________       _________
  ___ _________   ___ _________   ___ _________   ___ _________   ___ _________
 ------------------------------------------------------------------------------
 TOTAL #BONDS:   0       TOT REQ DED:    35.00    **** ALL BOND # ASSIGNED ****
 TOTAL #OWNERS:  4       TOT CUR DED:    35.00      1  2
 TOTAL BALANCE: 10.00    TOTAL REFUND:    0.00
 ------------------------------------------------------------------------------
 FUNC: A= ADD CHN  C= CHANGE  D= DELETE  N= NAME SEARCH  R= RETRIEVE  S= SUSPEND
  PF1= HELP           PF2= OWNERS        PF3= PREV SCREEN      PF4= QNORM
  PF5= MAIN MENU      PF9= QREG          PF12= END
```

Bond Updates and Purchases

1. After you enter the T&A for each employee, NPPS reviews all the bonds in order to calculate the Total Current Bond Deduction for the pay period. This total should be identical to the Total Required Bond Deduction. The only exception occurs when NPPS finds that the employee's total pay amount is less than the Total Required Bond Deduction. In this case, NPPS sets the Total Current Bond Deduction to zero and does not make any bond deduction for the current pay period. In addition, NPPS updates the Total Balance for all outstanding bond deductions waiting to be applied to the future purchase of a bond.
2. When the T&A for each employee is entered, NPPS looks at the purchase price of each Series EE bond and decides whether the bond balance is 50 percent or more of the purchase price. If the balance is 50 percent or more of the purchase price, NPPS assigned the current month and year to the Series EE bond in the Bond Date field.
3. For Series I Bonds, when the T&A for each employee is entered, NPPS looks at the purchase price of each Series I bond and decides whether the bond balance is 50 percent or more of the purchase price. If the balance is 50 percent or more of the purchase price, NPPS assigns the current month and year to the Series I bond in the Bond Date field.

4. When the T&A for each employee is entered, NPPS looks at the purchase price of each bond and decides whether a bond is to be purchase based on the required deduction and/or the bond balance amount. If a bond should be purchased, NPPS enters "Yes" in the Bond To Be Purchased field.

BOND ROTATION

During initialization, if the bond is Series EE the second owner/co-owner combination for Mr. Jones' number 2 bond moves into the first position. Likewise, the third combination moves into position number two. The combination that received the bond purchase in the previous pay period moves into the third and final position. The rotation will continue in this manner until Mr. Jones chooses to change or delete this bond.

```
COMMAND: ________                    NPPS
NAO1233                    BOND DEDUCTIONS - BOND
      SSN     PAYBLK  BOND#   FUNC     LAST NAME                FIRST NAME    I
  100 00 0056    01     2_      R        JONES_______             ERICK__       L
 STATUS:          BOND TO BE PURCHASED:      BOND DATE: 0000  BOND SERIES:
 DENOMINATION:   50          REQ DED: __25.00     BALANCE:    0.00
 PURCHASE PRICE:  25.00      CUR DED:    0.00     REFUND:  ___0.00
   OWNER SSN / CODE ( OR, POD) - CO-OWNER BENEFICIARY:   (PURCHASE SEQUENCE)
       (1)            (2)            (3)            (4)            (5)
    100000056      100000056      100000056      _________      _________
  OR_ 100000200  OR_ 100000300   OR_ 100000100   ___ _________  ___ _________
       (6)            (7)            (8)            (9)            (10)
    _________      _________      _________      _________      _________
  ___ _________  ___ _________  ___ _________  ___ _________  ___ _________
 ------------------------------------------------------------------------------

 TOTAL #BONDS:   2       TOT REQ DED:    35.00    **** ALL BOND # ASSIGNED ****
 TOTAL #OWNERS:  4       TOT CUR DED:     0.00      1  2
 TOTAL BALANCE: 10.00    TOTAL REFUND:    0.00
 ------------------------------------------------------------------------------
 FUNC: A= ADD CHN  C= CHANGE  D= DELETE  N= NAME SEARCH  R= RETRIEVE  S= SUSPEND
  PF1= HELP          PF2= OWNERS        PF3= PREV SCREEN      PF4= QNORM
  PF5= MAIN MENU     PF9= QREG          PF12= END
```

Bond Rotation

During initialization, if the bond is Series EE NPPS looks at each rotating bond and determines whether or not a bond was purchased during the prior pay period. If the owner/co-owner combination in the first position did receive a bond, this combination rotates to the end of the line and each additional owner/co-owner combination will move forward one position. The rotation does not occur until the owner/co-owner combination in position number 1 receives a bond and the bond is not attached to a given owner/co-owner combination until it is purchased. Therefore, the outstanding balance of a canceled bond always belongs to the employee.

STEPS TO CHANGE A BOND

In the following example, Mr. Jones decides to increase the Required Deduction for bond number 1. The original deduction was $10.00 and he wants the deduction to increase to $20.00 per pay period. As a result of this change, Mr. Jones' Total Required Bond Deduction (per pay period) becomes $45.00.

```
COMMAND: ________                    NPPS
NAO1233                     BOND DEDUCTIONS - BOND
      SSN     PAYBLK  BOND#   FUNC     LAST NAME                FIRST NAME    I
  100 00 0056    01     1_      C        JONES_______            ERICK__       L
 STATUS:          BOND TO BE PURCHASED:      BOND DATE: 0000  BOND SERIES:
 DENOMINATION:  100          REQ DED: __20.00     BALANCE:   10.00
 PURCHASE PRICE:  50.00      CUR DED:    0.00     REFUND:  ___0.00
   OWNER SSN / CODE ( OR, POD) - CO-OWNER BENEFICIARY:   (PURCHASE SEQUENCE)
       (1)            (2)            (3)            (4)            (5)
    100000056      _________      _________      _________      _________
  POD 000000001   ___ _________  ___ _________  ___ _________  ___ _________
       (6)            (7)            (8)            (9)            (10)
    _________      _________      _________      _________      _________
  ___ _________  ___ _________  ___ _________  ___ _________  ___ _________
 ---------------------------------------------------------------------------
 TOTAL #BONDS:   2       TOT REQ DED:    35.00    **** ALL BOND # ASSIGNED ****
 TOTAL #OWNERS:  4       TOT CUR DED:     0.00      1  2
 TOTAL BALANCE: 10.00    TOTAL REFUND:    0.00
 ---------------------------------------------------------------------------
 FUNC: A= ADD CHN  C= CHANGE  D= DELETE  N= NAME SEARCH  R= RETRIEVE  S= SUSPEND
  PF1= HELP           PF2= OWNERS        PF3= PREV SCREEN      PF4= QNORM
  PF5= MAIN MENU      PF9= QREG          PF12= END
```

Changing a Bond (Page 1)

1. Navigate to the bond template. Enter the SSN of the employee and the number of the bond to be changed. Press **ENTER**. NPPS will display the current information for the bond.
2. Change the FUNC to **C**. Enter the desired changes. Press **ENTER**.

```
COMMAND: ________                    NPPS
NAO9201                BOWN MULTIPLE MESSAGE DISPLAY



    SSN       PAYBLK     FUNC       LAST NAME                FIRST NAME    I
100 00 0056     01         R        JONES_________________   ERICK_____    L

*   PAYBLOCK 01 SSN 100-00-0056 CHANGED IN MASTER EMPLOYEE RECORD
*   NORMAL RECALCULATION HAS BEEN DONE









PF1= HELP         PF3= PREV SCREEN       PF5= MAIN MENU        PF7= BACKWARD
PF8= FORWARD      PF12= END
PF4= QNORM        PF9= QREG
```

Changing a Bond (Page 2)

3. NPPS displays the Bond Owner Multiple Message screen which states that the employees master record has been updated and the normal recalculations have been done. You may view the QNORM template in order to confirm that the recalculations have been performed. Press **PF3** if you want to view the Bond template.

```
COMMAND: ________                    NPPS
NAO1233                    BOND DEDUCTIONS - BOND
      SSN     PAYBLK  BOND#   FUNC     LAST NAME                FIRST NAME    I
  100 00 0056    01     1_      R        JONES_______             ERICK__       L
 STATUS:          BOND TO BE PURCHASED:      BOND DATE: 0000  BOND SERIES:
 DENOMINATION:  100          REQ DED: __20.00     BALANCE:   10.00
 PURCHASE PRICE:  50.00      CUR DED:    0.00     REFUND:  ___0.00
   OWNER SSN / CODE ( OR, POD) - CO-OWNER BENEFICIARY:   (PURCHASE SEQUENCE)
       (1)             (2)             (3)             (4)             (5)
    100000056       _________       _________       _________       _________
  POD 000000001   ___ _________   ___ _________   ___ _________   ___ _________
       (6)             (7)             (8)             (9)             (10)
    _________       _________       _________       _________       _________
  ___ _________   ___ _________   ___ _________   ___ _________   ___ _________
 ------------------------------------------------------------------------------
 TOTAL #BONDS:   2       TOT REQ DED:    45.00    **** ALL BOND # ASSIGNED ****
 TOTAL #OWNERS:  4       TOT CUR DED:     0.00      1  2
 TOTAL BALANCE: 10.00    TOTAL REFUND:    0.00
 ------------------------------------------------------------------------------

 FUNC: A= ADD CHN  C= CHANGE  D= DELETE  N= NAME SEARCH  R= RETRIEVE  S= SUSPEND
  PF1= HELP           PF2= OWNERS        PF3= PREV SCREEN      PF4= QNORM
  PF5= MAIN MENU      PF9= QREG          PF12= END
```

Changing a Bond (Page 3)

4. The Bond template displays the changed bond. If appropriate, NPPS automatically recalculates the Purchase Price. In addition, the Total Number of Bonds, Total Required Deductions, Total Number of Owner/Co-owner Beneficiary combinations, and All Bond Numbers Assigned fields are updated.

STEPS TO CHANGE A BOND OWNER

In the example below, Mr. Jones decides to add his son's middle name to the information on the Bond Owner template for bond number 1.

```
COMMAND: ________                    NPPS
NAO1233                     BOND DEDUCTIONS - BOND
      SSN     PAYBLK  BOND#   FUNC     LAST NAME                FIRST NAME    I
  100 00 0056    01     1_      R        JONES_______            ERICK__       L
 STATUS:          BOND TO BE PURCHASED:      BOND DATE: 0000  BOND SERIES:
 DENOMINATION:  100          REQ DED: __20.00     BALANCE:   10.00
 PURCHASE PRICE:  50.00      CUR DED:    0.00     REFUND:  ___0.00
   OWNER SSN / CODE ( OR, POD) - CO-OWNER BENEFICIARY:   (PURCHASE SEQUENCE)
       (1)             (2)             (3)             (4)             (5)
    100000056       _________       _________       _________       _________
  POD 000000001   ___ _________   ___ _________   ___ _________   ___ _________
       (6)             (7)             (8)             (9)             (10)
    _________       _________       _________       _________       _________
  ___ _________   ___ _________   ___ _________   ___ _________   ___ _________
 ------------------------------------------------------------------------------
 TOTAL #BONDS:   2       TOT REQ DED:    45.00    **** ALL BOND # ASSIGNED ****
 TOTAL #OWNERS:  4       TOT CUR DED:     0.00      1  2
 TOTAL BALANCE: 10.00    TOTAL REFUND:    0.00
 ------------------------------------------------------------------------------

 FUNC: A= ADD CHN  C= CHANGE  D= DELETE  N= NAME SEARCH  R= RETRIEVE  S= SUSPEND
  PF1= HELP           PF2= OWNERS        PF3= PREV SCREEN      PF4= QNORM
  PF5= MAIN MENU      PF9= QREG          PF12= END
```

Changing a Bond Owner (Page 1)

1. Navigate to the bond template. Enter the SSN of the employee and any assigned bond number. Press **ENTER**. NPPS displays the information regarding this bond. Press **PF2**.

```
 COMMAND: ________                    NPPS
 NAO1233                      BOND OWNERS - BOWN
--------------------------------------------------------------------------------
EMPLOYEE SSN: 100 00 0056       NAME: JONES                     ERICK        L
BOND OWNER SSN: 100 00 0056          FUNC: C      BOND:     1
OWNER NAME:     ERICK JONES_________________
ADDRESS:        1000 SEA HAWK LANE__________________
                ____________________________________
CITY:           WEBSTER________   STATE: TX_     ZIP: 77598 ____

CO-OWNER/BEN CODE: POD
NAME:              JAMES ALFRED JONES_________        I.D.:  000 00 0001
--------------------------------------------------------------------------------
    OWNER SSN   CODE   CO BEN I.D.           OWNER SSN   CODE   CO BEN I.D.
   100-00-0056   POD   000-00-0001          100-00-0056   OR    100-00-0100
   100-00-0056   OR    100-00-0200          100-00-0056   OR    100-00-0300



--------------------------------------------------------------------------------
FUNCTION:   A= ADD        C= CHANGE    D= DELETE    R= RETRIEVE    S= SUSPEND
 PF1= HELP  PF3= PREV  PF7= BKWD    PF8= FRWD    PF9= SCROLL ALL   PF12= END
```

Changing a Bond Owner (Page 2)

2. NPPS displays the Bond Owner template. All owner/co-owner combinations are listed at the bottom of the screen. The first owner/co-owner combination for the bond number being processed will be displayed. Use the **PF8** key to navigate to the combination you want to change. If the combination you want to change is not linked to the current bond number, press **PF9** to scroll all owners. The bond number will change to ALL to remind you that all owners are available. Enter a FUNC of **C** and change the desired information. Press **ENTER**

```
* ADDRESS FOR OWNER 100000056 HAS BEEN CHANGED
 *  ALL CHANGES HAVE BEEN MADE....PRESS ENTER TO COMPLETE UPDATE
 COMMAND: ________                    NPPS
 NAO1233                       BOND OWNERS - BOWN
-------------------------------------------------------------------------------
EMPLOYEE SSN: 100 00 0056       NAME: EASTWOOD                  CLINT
BOND OWNER SSN: 100 00 0056          FUNC: C      BOND:     1
OWNER NAME:     ERICK JONES_________________
ADDRESS:        1000 SEA HAWK LANE__________________
                ____________________________________
CITY:           WEBSTER_________   STATE: TX_     ZIP: 77598 0000

CO-OWNER/BEN CODE: POD
NAME:              JAMES ALFRED JONES__________        I.D.:  000 00 0001
-------------------------------------------------------------------------------
    OWNER SSN   CODE   CO BEN I.D.           OWNER SSN   CODE   CO BEN I.D.
   100-00-0056   POD   000-00-0001          100-00-0056   OR    100-00-0100
   100-00-0056   OR    100-00-0200          100-00-0056   OR    100-00-0300



-------------------------------------------------------------------------------
FUNCTION:   A= ADD        C= CHANGE    D= DELETE    R= RETRIEVE    S= SUSPEND
 PF1= HELP  PF3= PREV  PF7= BKWD    PF8= FRWD    PF9= SCROLL ALL   PF12= END
```

Changing a Bond Owner (Page 3)

3. NPPS displays the message, ALL CHANGES HAVE BEEN MADE...PRESS ENTER TO COMPLETE UPDATE.

STEPS TO DELETE A BOND

In the following example, Mr. Jones decides to delete his fixed bond (i.e., bond number 1). His bond receives a status of Delete. The balance of $10.00 for this bond is converted into a refund by NPPS automatically. In addition, NPPS automatically zeros out the Balance and Total Balance fields. The Total Required Deduction is reduced by $20.00 accordingly.

The bond may be reinstated using the add function throughout this entire pay period. If the bond is not reinstated, it will be purged during initialization. Since the corresponding bond owner/co-owner beneficiary combination is not used by any other bond, it will also be purged during initialization. However, the owner/co-owner beneficiary combination may not be deleted until initialization because the bond may be reinstated throughout the entire pay period.

```
COMMAND: ________                    NPPS
NAO1233                   BOND DEDUCTIONS - BOND
      SSN     PAYBLK  BOND#   FUNC     LAST NAME                FIRST NAME    I
  100 00 0056    01     1_      D        JONES_______             ERICK__       L
 STATUS:          BOND TO BE PURCHASED:      BOND DATE: 0000  BOND SERIES:
 DENOMINATION:  100          REQ DED: __20.00     BALANCE:   10.00
 PURCHASE PRICE:  50.00      CUR DED:    0.00     REFUND:  ___0.00
   OWNER SSN / CODE ( OR, POD) - CO-OWNER BENEFICIARY:   (PURCHASE SEQUENCE)
       (1)             (2)             (3)             (4)             (5)
    100000056       _________       _________       _________       _________
  POD 000000001   ___ _________   ___ _________   ___ _________   ___ _________
       (6)             (7)             (8)             (9)             (10)
    _________       _________       _________       _________       _________
  ___ _________   ___ _________   ___ _________   ___ _________   ___ _________
 ------------------------------------------------------------------------------
 TOTAL #BONDS:   2       TOT REQ DED:    45.00    **** ALL BOND # ASSIGNED ****
 TOTAL #OWNERS:  4       TOT CUR DED:     0.00      1  2
 TOTAL BALANCE: 10.00    TOTAL REFUND:    0.00
 ------------------------------------------------------------------------------
 FUNC: A= ADD CHN  C= CHANGE  D= DELETE  N= NAME SEARCH  R= RETRIEVE  S= SUSPEND
  PF1= HELP           PF2= OWNERS        PF3= PREV SCREEN      PF4= QNORM
  PF5= MAIN MENU      PF9= QREG          PF12= END
```

Deleting a Bond (Page 1)

1. Navigate to the bond template. Enter the SSN of the employee and the number of the bond to be deleted. Press **ENTER**. NPPS will display the current information for the bond.
2. Change the FUNC to **D**. Press **ENTER**.

```
COMMAND: ________                    NPPS
NAO9201                BOWN MULTIPLE MESSAGE DISPLAY


    SSN       PAYBLK     FUNC       LAST NAME                FIRST NAME    I
100 00 0056     01         R        JONES_________________   ERICK_____    L

*   PAYBLOCK 01 SSN 100-00-0056 CHANGED IN MASTER EMPLOYEE RECORD
*   NORMAL RECALCULATION HAS BEEN DONE









PF1= HELP         PF3= PREV SCREEN       PF5= MAIN MENU        PF7= BACKWARD
PF8= FORWARD      PF12= END
PF4= QNORM        PF9= QREG
```

Deleting a Bond (Page 2)

3. NPPS displays the Bond Owner Multiple Message screen which states that the employees master record has been updated and the normal recalculations have been done. You may view the QNORM template in order to confirm that the recalculations have been performed. Press **PF3** if you want to view the Bond template.

```
COMMAND: ________                    NPPS
NAO1233                    BOND DEDUCTIONS - BOND
      SSN     PAYBLK  BOND#   FUNC     LAST NAME                FIRST NAME    I
  100 00 0056    01     1_      R        JONES_______             ERICK__       L
 STATUS:          BOND TO BE PURCHASED:      BOND DATE: 0000  BOND SERIES:
 DENOMINATION:  100          REQ DED: __20.00     BALANCE:    0.00
 PURCHASE PRICE:  50.00      CUR DED:    0.00     REFUND:  __10.00
   OWNER SSN / CODE ( OR, POD) - CO-OWNER BENEFICIARY:   (PURCHASE SEQUENCE)
       (1)             (2)             (3)             (4)             (5)
    100000056       _________       _________       _________       _________
  POD 000000001   ___ _________   ___ _________   ___ _________   ___ _________
       (6)             (7)             (8)             (9)             (10)
    _________       _________       _________       _________       _________
  ___ _________   ___ _________   ___ _________   ___ _________   ___ _________
 ------------------------------------------------------------------------------
 TOTAL #BONDS:   2       TOT REQ DED:    25.00    **** ALL BOND # ASSIGNED ****
 TOTAL #OWNERS:  4       TOT CUR DED:     0.00      1  2
 TOTAL BALANCE:  0.00    TOTAL REFUND:    0.00
 ------------------------------------------------------------------------------

 FUNC: A= ADD CHN  C= CHANGE  D= DELETE  N= NAME SEARCH  R= RETRIEVE  S= SUSPEND
  PF1= HELP           PF2= OWNERS        PF3= PREV SCREEN      PF4= QNORM
  PF5= MAIN MENU      PF9= QREG          PF12= END
```

Deleting a Bond (Page 3)

4. The Bond template displays the bond status as Delete. Any outstanding Balance has been converted to a Refund. In addition, Total Required Deductions has been reduced by the Required Deduction amount for the deleted bond.

Since you may reinstate the bond at any time during the current pay period, the Total Number of Owner/Co-owner Beneficiary combinations, the All Bond Number Assigned and the Total Number of Bonds fields are not updated until you initialize for the next pay period. Accordingly, you may not delete the corresponding owner/co-owner beneficiary combination for a fixed bond. In addition, you may not delete all the owner/co-owner beneficiary combinations for a rotating bond.

STEPS TO DELETE AN INACTIVE OWNER

In the following example, Mr. Jones decides to remove his third grandchild from the rotating bond. However, he wants every other aspect of the bond to remain the same.

```
COMMAND: ________                    NPPS
NAO1233                     BOND DEDUCTIONS - BOND
      SSN     PAYBLK  BOND#   FUNC     LAST NAME                FIRST NAME    I
  100 00 0056    01     2_      R        JONES_______            ERICK__       L
 STATUS           BOND TO BE PURCHASED:      BOND DATE: 0000  BOND SERIES:
 DENOMINATION:   50          REQ DED: __25.00     BALANCE:    0.00
 PURCHASE PRICE:  25.00      CUR DED:    0.00     REFUND:  ___0.00
   OWNER SSN / CODE ( OR, POD) - CO-OWNER BENEFICIARY:   (PURCHASE SEQUENCE)
       (1)             (2)             (3)             (4)             (5)
    100000056       100000056       100000056       _________       _________
   OR 000000001   OR_ 100000200   OR_ 100000300   ___ _________   ___ _________
       (6)             (7)             (8)             (9)             (10)
    _________       _________       _________       _________       _________
 ___ _________   ___ _________   ___ _________   ___ _________   ___ _________
 ------------------------------------------------------------------------------
 TOTAL #BONDS:   2       TOT REQ DED:    25.00    **** ALL BOND # ASSIGNED ****
 TOTAL #OWNERS:  4       TOT CUR DED:     0.00      1  2
 TOTAL BALANCE:  0.00    TOTAL REFUND:    0.00
 ------------------------------------------------------------------------------

 FUNC: A= ADD CHN  C= CHANGE  D= DELETE  N= NAME SEARCH  R= RETRIEVE  S= SUSPEND
  PF1= HELP           PF2= OWNERS        PF3= PREV SCREEN      PF4= QNORM
  PF5= MAIN MENU      PF9= QREG          PF12= END
```

Deleting an Inactive Owner (Page 1)

1. Navigate to the bond template. Enter the SSN of the employee and the number of the bond to be changed. Press **ENTER**. NPPS will display the current information for the bond.

```
COMMAND: ________                    NPPS
NAO1233                     BOND DEDUCTIONS - BOND
      SSN     PAYBLK  BOND#   FUNC     LAST NAME                FIRST NAME    I
  100 00 0056    01     2_      C        JONES_______            ERICK__       L
 STATUS:          BOND TO BE PURCHASED:      BOND DATE: 0000  BOND SERIES:
 DENOMINATION:   50          REQ DED: __25.00     BALANCE:    0.00
 PURCHASE PRICE:  25.00      CUR DED:    0.00     REFUND:  ___0.00
   OWNER SSN / CODE ( OR, POD) - CO-OWNER BENEFICIARY:   (PURCHASE SEQUENCE)
       (1)             (2)             (3)             (4)             (5)
    100000056       100000056        _________       _________       _________
   OR 000000001   OR_ 100000200   ___ _________   ___ _________   ___ _________
       (6)             (7)             (8)             (9)             (10)
    _________       _________       _________       _________       _________
  ___ _________   ___ _________   ___ _________   ___ _________   ___ _________
 ------------------------------------------------------------------------------
 TOTAL #BONDS:   2       TOT REQ DED:    25.00    **** ALL BOND # ASSIGNED ****
 TOTAL #OWNERS:  4       TOT CUR DED:     0.00      1  2
 TOTAL BALANCE:  0.00    TOTAL REFUND:    0.00
 ------------------------------------------------------------------------------

 FUNC: A= ADD CHN  C= CHANGE  D= DELETE  N= NAME SEARCH  R= RETRIEVE  S= SUSPEND
  PF1= HELP           PF2= OWNERS        PF3= PREV SCREEN      PF4= QNORM
  PF5= MAIN MENU      PF9= QREG          PF12= END
```

Deleting an Inactive Owner (Page 2)

2. Change the FUNC to **C**. Blank out the information for the owner/co-owner beneficiary combination you want to delete. You may delete all but one of the combinations for a rotating bond. You may not delete the only combination for a fixed bond. Press **ENTER**.

```
COMMAND: ________                    NPPS
NAO9201                BOWN MULTIPLE MESSAGE DISPLAY


    SSN       PAYBLK     FUNC       LAST NAME                FIRST NAME    I
100 00 0056     01         R        JONES_________________   ERICK_____    L

*   PAYBLOCK 01 SSN 100-00-0056 CHANGED IN MASTER EMPLOYEE RECORD
*   NORMAL RECALCULATION HAS BEEN DONE









PF1= HELP         PF3= PREV SCREEN       PF5= MAIN MENU        PF7= BACKWARD
PF8= FORWARD      PF12= END
PF4= QNORM        PF9= QREG
```

Deleting an Inactive Owner (Page 3)

3. NPPS displays the Bond Owner Multiple Message screen which states that the employees master record has been updated and the normal recalculations have been done. You may view the QNORM template in order to confirm that the recalculations have been performed. Press **PF3** in order to view the Bond template.

```
COMMAND: ________                    NPPS
NAO1233                     BOND DEDUCTIONS - BOND
      SSN     PAYBLK  BOND#   FUNC     LAST NAME                FIRST NAME    I
  100 00 0056    01     2_      R        JONES_______             ERICK__       L
 STATUS:          BOND TO BE PURCHASED:      BOND DATE: 0000  BOND SERIES:
 DENOMINATION:   50          REQ DED: __25.00     BALANCE:    0.00
 PURCHASE PRICE:  25.00      CUR DED:    0.00     REFUND:  ___0.00
   OWNER SSN / CODE ( OR, POD) - CO-OWNER BENEFICIARY:   (PURCHASE SEQUENCE)
       (1)             (2)             (3)             (4)             (5)
    100000056       100000056       _________       _________       _________
   OR 000000001   OR_ 100000200   ___ _________   ___ _________   ___ _________
       (6)             (7)             (8)             (9)             (10)
    _________       _________       _________       _________       _________
  ___ _________   ___ _________   ___ _________   ___ _________   ___ _________
 ------------------------------------------------------------------------------
 TOTAL #BONDS:   2       TOT REQ DED:    25.00    **** ALL BOND # ASSIGNED ****
 TOTAL #OWNERS:  4       TOT CUR DED:     0.00      1  2
 TOTAL BALANCE:  0.00    TOTAL REFUND:    0.00
 ------------------------------------------------------------------------------

 FUNC: A= ADD CHN  C= CHANGE  D= DELETE  N= NAME SEARCH  R= RETRIEVE  S= SUSPEND
  PF1= HELP           PF2= OWNERS        PF3= PREV SCREEN      PF4= QNORM
  PF5= MAIN MENU      PF9= QREG          PF12= END
```

Deleting an Inactive Owner (Page 4)

4. The Bond template displays the changed bond. You may press **PF2** in order to view the Bond Owner template.

```
 COMMAND: ________                    NPPS
 NAO1233B                     BOND OWNERS - BOWN

 ------------------------------------------------------------------------------
 EMPLOYEE SSN: 100 00 0056       NAME:   JONES                 ERICK         L
 BOND OWNER SSN: 100 00 0056          FUNC:  D
 OWNER NAME:    ERICK JONES_________________
 ADDRESS:       1000 SEA HAWK LANE__________
                ____________________________________
 CITY:           WEBSTER_________   STATE: TX_     ZIP: 77598 - ____

 CO-OWNER/BEN CODE: OR
 NAME:              JANE JONES_______                        I.D.: 100 00 0300
 ------------------------------------------------------------------------------
     OWNER SSN   CODE   CO BEN I.D.            OWNER SSN   CODE   CO BEN I.D.
    100-00-0056   POD   000-00-0001           100-00-0056   OR    100-00-0200
    100-00-0056   OR    100-00-0100
    100-00-0056   OR    100-00-0300
 ------------------------------------------------------------------------------

 FUNCTION:   A= ADD        C= CHANGE    D= DELETE    R= RETRIEVE    S= SUSPEND
  PF1= HELP    PF3= PREV SCREEN    PF7= BACKWARD    PF8= FORWARD    PF12= END
```

Deleting an Inactive Owner (Page 5)

5. NPPS displays the Bond Owner template. Since the owner is no longer associated with the bond number, press **PF9** to scroll all owner/co-owner combinations for the employee. Press **PF8** to navigate to the combination to be deleted. Enter a FUNC of **D**. Press **ENTER**.

```
 *  OWNER 56 / OR / 300 DELETED
 COMMAND: ________                    NPPS
 NAO1233B                     BOND OWNERS - BOWN
--------------------------------------------------------------------------------

EMPLOYEE SSN: 100 00 0056       NAME:   JONES                 ERICK         L
BOND OWNER SSN: 100 00 0056          FUNC:  R
OWNER NAME:    ERICK JONES_________________
ADDRESS:       1000 SEA HAWK LANE___________
                 ___________________________________
CITY:            WEBSTER________   STATE: TX_     ZIP: 77598 - ____

CO-OWNER/BEN CODE: OR
NAME:              JANE JONES_______                        I.D.: 100 00 0300
--------------------------------------------------------------------------------
    OWNER SSN   CODE   CO BEN I.D.            OWNER SSN   CODE   CO BEN I.D.
   100-00-0056   POD   000-00-0001           100-00-0056   OR    100-00-0200
   100-00-0056   OR    100-00-0100
   100-00-0056   OR    100-00-0300
--------------------------------------------------------------------------------

FUNCTION:   A= ADD        C= CHANGE    D= DELETE    R= RETRIEVE    S= SUSPEND
 PF1= HELP    PF3= PREV SCREEN    PF7= BACKWARD    PF8= FORWARD    PF12= END
```

Deleting an Inactive Owner (Page 6)

6. NPPS displays the message, OWNER ## / OR / DELETED. Press **ENTER** to complete the update.

```
COMMAND: ________                    NPPS
NAO1233                     BOND DEDUCTIONS - BOND
      SSN     PAYBLK  BOND#   FUNC     LAST NAME                FIRST NAME    I
  100 00 0056    01     2_      R        JONES_______            ERICK__       L
STATUS:          BOND TO BE PURCHASED:      BOND DATE: 0000  BOND SERIES:
DENOMINATION:   50          REQ DED: __25.00     BALANCE:    0.00
PURCHASE PRICE:  25.00      CUR DED:    0.00     REFUND:  ___0.00
  OWNER SSN / CODE ( OR, POD) - CO-OWNER BENEFICIARY:   (PURCHASE SEQUENCE)
      (1)            (2)            (3)            (4)            (5)
   100000056       100000056       _________      _________      _________
  OR 000000001   OR_ 100000200   ___ _________   ___ _________   ___ _________
      (6)            (7)            (8)            (9)            (10)
   _________      _________      _________      _________      _________
 ___ _________   ___ _________   ___ _________   ___ _________   ___ _________
--------------------------------------------------------------------------------
TOTAL #BONDS:   2       TOT REQ DED:    25.00    **** ALL BOND # ASSIGNED ****
TOTAL #OWNERS:  3       TOT CUR DED:     0.00      1  2
TOTAL BALANCE:  0.00    TOTAL REFUND:    0.00
--------------------------------------------------------------------------------

FUNC: A= ADD CHN  C= CHANGE  D= DELETE  N= NAME SEARCH  R= RETRIEVE  S= SUSPEND
 PF1= HELP           PF2= OWNERS        PF3= PREV SCREEN      PF4= QNORM
 PF5= MAIN MENU      PF9= QREG          PF12= END
```

Deleting an Inactive Owner (Page 7)

7. The Bond template displays the changed bond. NPPS has updated the Total Number Owner/Co-owner Beneficiary field according to the number of combinations you have deleted.

4.2.2.1.4 NEBA Life Insurance

```
COMMAND: ________                    NPPS
NAO1234              NEBA LIFE AND TRAVEL INSURANCE - NEBA
-------------------------------------------------------------------------------

     SSN      PAYBLK   FUNC           LAST NAME                FIRST NAME    I
 ___ __ ____            _            ______________________  ____________  _


BASIC: _     SPOUSE: _     OPTIONAL UNITS: _     SMOKER: _       CHAPTER: _
     (Y OR BLANK)            (1-6 OR BLANK)      (Y OR BLANK)    (1 OR BLANK)

TRAVEL COVERAGE

PLAN :  _  (1-4 OR BLANK)
$25,000  _      $50,000  _      $100,000  _
SPOUSE: _  (Y OR BLANK)
                                                        BIRTH DATE:
-------------------------------------------------------------------------------
FUNCTION:    A= ADD CHN   C= CHANGE   N= NAME SEARCH   R= RETRIEVE   S= SUSPEND
 PF1= HELP  PF3= PREV SCREEN  PF4= QNORM  PF5= MAIN MENU  PF9= QREG  PF12= END
```

NEBA Life and Travel Insurance (NEBA)

DESCRIPTION AND EXECUTION

The NEBA Life Insurance (NEBA) template is used to set up and maintain employee information which identifies the NEBA basic, optional, spousal, and NEBA travel accident insurance selections. Given an employee's birth date, NPPS computes the employee's age for use in the computation of the NEBA life insurance biweekly deduction. NPPS computes the employee's age class on the basis of date of birth. The NEBA table computes the deduction on the basis of age class, salary class, units, and smoker code for optional insurance. Basic coverage must be selected if spouse or optional coverage is selected. The NEBATRV table computes the biweekly deduction for NEBA travel accident insurance based on the plan, insurance amount, and spouse enrollment. The NEBA travel deduction is not reported separately. It is part of the total NEBA deduction. NEBA fields will be set to null during pay initialization of the pay period in which the employee terminates. NPPS provides the capability to report deductions to two different NEBA chapters. A blank in the Chapter field will report the default name and address from the TINSTALL table. A "1" will use the alternate chapter name and address.

<u>Steps to Reach NEBA Life Insurance</u>

1. At the Main Menu, select **2** - Payroll.
2. At the Payroll Main Menu, select **2** - MER.
3. At the MER Data Entry Menu, select **1** - Master Selection MER Menu.
4. At the Master Selection MER Menu, select **4** - NEBA Life Insurance.

4.2.2.1.5 Military Deposit Deductions

```
COMMAND: ________                    NPPS
NAO1235            MILITARY DEPOSIT DEDUCTIONS - MIL
-------------------------------------------------------------------------------
     SSN      PAYBLK   FUNC            LAST NAME                FIRST NAME    I
 ___ __ ____            _             _______________________  ____________  _

 TOTAL REQUIRED:         _______0.00   REQUESTED W/H:   _______0.00    ENTER X
                                                                       TO CANCEL
 INTEREST ACCRUAL DATE:  ________                                          _

 INTEREST ACCRUED YTD:          0.00   DEDUCTION YTD:            0.00
 INTEREST ACCRUED CUM:          0.00   DEDUCTION CUM:            0.00
                                       TRANSFERRED IN:           0.00
 CASH PAYMENT:           _______0.00   TRANSFERRED OUT:          0.00
                                       BALANCE DUE:              0.00

 SCD LEAVE:                            RETIREMENT PLAN:
-------------------------------------------------------------------------------
FUNCTIONS:  A= ADD CHN   C= CHANGE   N= NAME SEARCH   R= RETRIEVE   S= SUSPEND
 PF1= HELP         PF3= PREV SCREEN      PF4= QNORM          PF5= MAIN MENU
 PF9= QREG         PF12= END
```

Military Deposit Deductions (MIL)

DESCRIPTION AND EXECUTION

The Military Deposit Deductions (MIL) template is used to set up and maintain employee information for the biweekly military deposit deduction amount, total initial deposit amount required, and a cash payment amount. NPPS provides an Interest Accrued Date based on the employee's Federal Service Computation date.

<u>Steps to Reach Military Deposit Deductions</u>

1. At the Main Menu, select **2** - Payroll.
2. At the Payroll Main Menu, select **2** - MER.
3. At the Master Employee Record Data Entry Menu, select **1** - Master Selection MER Menu.
4. At the Master Selection MER Menu, select **5** - Military Deposit Deductions.

NPPS automatically calculates the compounded retroactive interest when you enter the Interest Accrual Date and the Total Required Amount. However, subsequent changes in the Interest Accrual Date may produce erroneous recomputation of the interest due if the date change involves more than the current year.

4.2.2.1.6 Miscellaneous Voluntary Deductions

```
COMMAND: ________                    NPPS
NAO1236            MISCELLANEOUS VOLUNTARY DEDUCTIONS - MISC
-------------------------------------------------------------------------------

    SSN      PAYBLK   FUNC        LAST NAME                  FIRST NAME      I
___ __ ____            _         ______________________     ____________    _

 CFC CODE:                _________        UNION CODE (99=SEA):  __
 CFC DEDUCTION AMT:       ________         UNION DUES DED AMT:   ____________
                                           UNION DUES TABLE AMT:
 MISC DEDUCTION AMT:      ____________

 ADV PAY REQUESTED W/H:   ____________     ADV PAY DED YTD:
 ADV PAY TOT REQUIRED:    ____________     ADV PAY DED CUM:
                                           ADV PAY BALANCE DUE:

  SCD LEAVE:                             UNION BARGAINING UNIT STATUS:
-------------------------------------------------------------------------------
FUNCTIONS:  A= ADD CHN   C= CHANGE   N= NAME SEARCH   R= RETRIEVE   S= SUSPEND
 PF1= HELP         PF3= PREV SCREEN      PF4= QNORM          PF5= MAIN MENU
 PF9= QREG         PF12= END
```

Miscellaneous Voluntary Deductions (MISC)

DESCRIPTION AND EXECUTION

The Miscellaneous Voluntary Deductions (MISC) template is used to set up and maintain CFC deductions and to identify the receiving organization. This template is also used to set up and maintain employee union dues requiring biweekly deductions and to identify the union. The Misc Deduction Amt field is used only when a specific deduction has not been identified and provided in NPPS. The Advance Pay deductions are used to collect an advance made to individual employees and to display the remaining balance due.

<u>Steps to Reach Miscellaneous Voluntary Deductions</u>

1. At the Main Menu, select **2** - Payroll.
2. At the Payroll Main Menu, select **2** - MER.
3. At the Master Employee Record Data Entry Menu, select **1** - Master Selection MER Menu.
4. At the Master Selection MER Menu, select **6** - Miscellaneous Voluntary Deductions.

DESCRIPTION OF DATA PROCESSING RESULTS AND OUTPUT

Entering a valid union code (contained in the Union table) and no deduction amount results in a computation of the deduction based on the standard deduction parameters found in the Union table. To override this computed amount, enter a value in the union dues deduction amount field.

4.2.2.1.7 Thrift Savings Plan Deductions

```
 COMMAND: ________                    NPPS
 NAO1237                   THRIFT SAVINGS PLAN - TSP
-------------------------------------------------------------------------------
     SSN         PAYBLK   FUNC       LAST NAME                FIRST NAME    I
 ___ __ ____                _        ______________________   ____________  _
                                                 ---------- CATCH-UP -----------
     DEDUCTION                                   DEDUCTION
      TSP PCT:    ____                             TSP AMT:    ____
  OR  TSP AMT:    ____

             CURRENT PP AMOUNT  YEAR-TO-DATE  CURRENT PP AMOUNT  YEAR-TO-DATE
EMP DED:
GOV BASIC:
GOV MATCH:
TOTAL:

TSP STATUS:     RET CD:    VEST:        TSP EMPLOYMENT CODE:       SEP FLAG: _
STAT DATE:              TSP SCD:        TSP EMPLOYMENT CODE DATE:
-------------------------------------------------------------------------------
FUNCTIONS:  A= ADD CHN   C= CHANGE   N= NAME SEARCH   R= RETRIEVE   S= SUSPEND
 PF1= HELP  PF3= PREV SCREEN  PF4= QNORM  PF5= MAIN MENU  PF9=QREG  PF12=END_
```

Thrift Savings Plan (TSP)

DESCRIPTION AND EXECUTION

The Thrift Savings Plan (TSP) template is used to set up and maintain the rate of the employee deduction or the deduction amount selected by the employee.

Steps to Reach Thrift Savings Plan

1. At the Main Menu, select **2** - Payroll.
2. At the Payroll Main Menu, select **2** - MER.
3. At the Master Employee Record Data Entry Menu, select **1** - Master Selection MER Menu.
4. At the Master Selection MER Menu, select **7** - Thrift Savings Plan.

4.2.2.1.8 Federal and State Taxes

```
COMMAND:  _______                    NPPS
 NAO1241                FEDERAL AND STATE TAXES - FTAX
 ------------------------------------------------------------------------------
      SSN      PAYBLK   FUNC            LAST NAME                FIRST NAME    I
  ___ __ ____            _             _____________________  ____________  _
                                  *** FEDERAL TAXES ***
 MARITAL STATUS (M,S): _          EXEMPTIONS: __            ADDITIONAL AMT:  -___
 EIC MARITAL CODE:     _    FEHB TEW: _                     EXEMPT FROM W/H: _
 (1=EMPLOYEE ONLY, 2=EMPLOYEE AND SPOUSE)                   (E OR BLANK)

                                 *** STATE TAXES ***
 STATE CODE:     __      MARITAL STATUS (M,S,H):     _    EXEMPTIONS:          __
 ADD EXEMPTS:    __      FILING STATUS (DC=J,S, ):   _    ALTERNATE %:      _____
 ALTERNATE AMT:  _____                (CT=A,B,C,D)       WORKING SPOUSE (Y, ): _
 ADDITIONAL AMT: _____   DEPENDENT OF ANOTHER (Y, ): _    EXEMPT FROM W/H(E, ): _

  FILING STATUS (FOR DC) - J=JOINTLY, S=SEPARATELY;     ALT AMT (MS ONLY)
  ALT % (AZ & MD ONLY); DEPENDENT OF ANOTHER (AL ONLY); WORKING SPOUSE (MS ONLY)
 ------------------------------------------------------------------------------
 FUNCTIONS:   A= ADD CHN   C= CHANGE   N= NAME SEARCH   R= RETRIEVE   S= SUSPEND
  PF1= HELP          PF3= PREV SCREEN   PF4= QNORM            PF5= MAIN MENU
  PF9= QREG          PF12= END
```

Federal and State Taxes (FTAX)

DESCRIPTION AND EXECUTION

The Federal and State Taxes (FTAX) template is used to set up and maintain the employee information required to compute the biweekly deductions for federal and state tax withholdings. The state tax deduction amount is a table-determined amount based on the information entered by the clerk. However, the following states need additional information in order to compute the state tax.

Alabama - If the employee is being claimed as a dependent by someone else, the Dependent of Another field should contain a "Y."

Arizona - The percent elected by the employee to be withheld should be entered in the Alternate % field.

Connecticut - The Filing Status should be either "A," "B," "C," or "D." If the employee has specified a reduced withholding amount, that amount should be entered in the Additional Amt field as a negative value.

District of Colombia - The Filing Status should be either "J" or "S" if the Martial Status field is "M."

Maryland - The Alternate % field should be used to indicate the appropriate tax table based on the percent of local income tax included.

Mississippi - The Exemptions field should be used to specify the number of dependents claimed by the employee. The Add Exempts should be used to specify the number of exemptions claimed for age and blindness. The Alternate Amt field should be used to indicate the amount of the personal exemption claimed by the employee. The Working Spouse field should contain a "Y" if the employee's spouse is also employed.

Steps to Reach Federal and State Taxes

1. At the Main Menu, select **2** - Payroll.
2. At the Payroll Main Menu, select **2** - MER.
3. At the Master Employee Record Data Entry Menu, select **1** - Master Selection MER Menu.
4. At the Master Selection MER Menu, select **8** - Federal and State Taxes.

4.2.2.1.9 City and County Taxes

```
COMMAND: ________                    NPPS
NAO1242                 CITY AND COUNTY TAXES - CTAX
-------------------------------------------------------------------------------

     SSN      PAYBLK   FUNC            LAST NAME               FIRST NAME    I
 ___ __ ____    __       R             _______________________  ____________  _


*** CITY TAXES ***
             CITY TAX CODE:      ___       MARITAL STATUS (M,S,H):  _
             ADDITIONAL AMOUNT:  ____      EXEMPTIONS:              __
             ALTERNATE AMOUNT:   ____      ADDITIONAL EXEMPTIONS:   __
             ALTERNATE %:        ___


*** COUNTY TAXES ***
             COUNTY TAX CODE:    ___       MARITAL STATUS (M,S,H):  _
             ADDITIONAL AMOUNT:  ____      EXEMPTIONS:              __
             ALTERNATE AMOUNT:   ____      ADDITIONAL EXEMPTIONS:   __
             ALTERNATE %:        ___

-------------------------------------------------------------------------------
FUNCTIONS:   A= ADD CHN   C= CHANGE   N= NAME SEARCH   R= RETRIEVE   S= SUSPEND
 PF1= HELP          PF3= PREV SCREEN   PF4= QNORM            PF5= MAIN MENU
 PF9= QREG          PF12= END
```

City and County Taxes (CTAX)

DESCRIPTION AND EXECUTION

The City and County Taxes (CTAX) template is used to set up and maintain the employee information required to compute biweekly deductions for city and county tax withholdings (as appropriate). The tax deduction amount is a table-determined amount based on code plus any additional amount input by the clerk, or by the alternate amount or alternate percent input by the clerk. The Additional Exemption field is only used in those states requiring this information. County taxes are currently not used in NPPS.

<u>Steps to Reach City and County Taxes</u>

1. At the Main Menu, select **2** - Payroll.
2. At the Payroll Main Menu, select **2** - MER.
3. At the Master Employee Record Data Entry Menu, select **1** - Master Selection MER Menu.
4. At the Master Selection MER Menu, select **9** - City and County Taxes.

4.2.2.1.10 Bankruptcy Payments

```
COMMAND: ________                    NPPS
NAO1251                BANKRUPTCY PAYMENTS - BANKRUPT
--------------------------------------------------------------------------------

     SSN      PAYBLK   FUNC          LAST NAME                FIRST NAME    I
 ___ __ ____            _           ______________________  ____________  _

                         *** BANKRUPTCY PAYMENTS ***

CURRENT DED:
REQUESTED DED: _____________ TOTAL TO BE DED: _____________ DED CUM: _____________

PAYEE NAME: ______________________________________
ADDRESS: ____________________________________
CITY: _________________   STATE: ___   ZIP: _____ - ____
REMARKS: _____________                                    ENTER X TO CANCEL: _

--------------------------------------------------------------------------------
FUNCTIONS:   C= CHANGE       N= NAME SEARCH       R= RETRIEVE       S= SUSPEND
 PF1= HELP           PF3= PREV SCREEN   PF4= QNORM            PF5= MAIN MENU
 PF9= QREG           PF12= END
```

Bankruptcy Payments (BANKRUPT)

DESCRIPTION AND EXECUTION

The Bankruptcy Payments (BANKRUPT) template is used to set up and maintain the biweekly deduction amount for court-ordered bankruptcy deductions as well as the total payment amount. Bankruptcy deductions cease automatically when the Ded Cum field equals the Total To Be Ded field, or when "X" is entered in the Enter X To Cancel field. A check is automatically sent to the payee entered on the template. The Remarks field may contain up to twelve characters and can be used to enter additional payment information pertaining to such items as court case or account number.

<u>Steps to Reach Bankruptcy Payments</u>

1. At the Main Menu, select **2** - Payroll.
2. At the Payroll Main Menu, select **2** - MER.
3. At the Master Employee Record Data Entry Menu, select **1** - Master Selection MER Menu.
4. At the Master Selection MER Menu, select **10** - Bankruptcy Payments.

4.2.2.1.11 Indebtedness to US Government

```
COMMAND: ________                    NPPS
NAO1252                INDEBTEDNESS TO U.S. - INDEBT
--------------------------------------------------------------------------------
     SSN      PAYBLK   FUNC          LAST NAME                FIRST NAME    I
 ___ __ ____            _            ______________________   ____________  _

                        *** INDEBTEDNESS TO U.S. ***

TOTAL PP DEDUCTION:                                EMPLOYEE PAYMENT COUNT: 0 OF 0
CURR DED:
REQUESTED DED: _____________ TOTAL TO BE DED: _____________ DED CUM: _____________

PAYEE NAME: _____________________________________
ADDRESS: _____________________________________
CITY: _________________   STATE: ___   ZIP: _____ - ____
REMARKS: _____________                                     ENTER X TO CANCEL: _

--------------------------------------------------------------------------------
FUNCTIONS:   C= CHANGE       N= NAME SEARCH       R= RETRIEVE       S= SUSPEND
 PF1= HELP           PF3= PREV SCREEN   PF4= QNORM            PF5= MAIN MENU
 PF7= BACKWARD       PF8= FORWARD       PF9= QREG             PF12= END
```

Indebtedness to US Government (INDEBT)

DESCRIPTION AND EXECUTION

The Indebtedness to US (INDEBT) template is used to set up and maintain the biweekly deduction amount and the total indebtedness amount for as many as five deductions to repay indebtedness to the US Government. An Indebtedness to US deduction ceases automatically when the Ded Cum field equals the Total To Be Ded field, or when "X" is entered in the Enter X To Cancel field.

<u>Steps to Reach Indebtedness to US</u>

1. At the Main Menu, select **2** - Payroll.
2. At the Payroll Main Menu, select **2** - MER.
3. At the Master Employee Record Data Entry Menu, select **1** - Master Selection MER Menu.
4. At the Master Selection MER Menu, select **11** - Indebtedness to US.

To retrieve, add, change, or cancel a second through fifth deduction, use the Backward and Forward PF keys to move from one deduction screen to another. Each of the five Indebtedness to US screens represents an individual deduction. The Employee Payment Count field indicates the number of Indebtedness to US deductions currently taken from the employee's salary.

4.2.2.1.12 Child Support Payments

```
COMMAND: ________                    NPPS
NAO1253                CHILD SUPPORT PAYMENTS - CHILDSP
--------------------------------------------------------------------------------
     SSN      PAYBLK   FUNC          LAST NAME                FIRST NAME    I
 ___ __ ____            _           ______________________  ____________  _

                        *** CHILD SUPPORT PAYMENTS ***

TOTAL PP DEDUCTION:                                EMPLOYEE PAYMENT COUNT: 0 OF 0
DATE LIMIT: ________        CURR DED:
REQUESTED DED: _____________ TOTAL TO BE DED: _____________ DED CUM: _____________

PAYEE NAME: ____________________________________
ADDRESS: ______________________________________
CITY: _________________   STATE: ___   ZIP: _____ - ____
REMARKS: _____________                                     ENTER X TO CANCEL: _

--------------------------------------------------------------------------------
FUNCTIONS:   C= CHANGE       N= NAME SEARCH       R= RETRIEVE       S= SUSPEND
 PF1= HELP           PF3= PREV SCREEN   PF4= QNORM            PF5= MAIN MENU
 PF7= BACKWARD       PF8= FORWARD       PF9= QREG             PF12= END
```

Child Support Payments (CHILDSP)

DESCRIPTION AND EXECUTION

The Child Support Payments (CHILDSP) template is used to set up and maintain the biweekly deduction amount for three child support deductions, total deduction amounts, and expiration dates. A Child Support Deduction ceases automatically when the Ded Cum field equals Total To Be Ded field, the Date Limit field is reached during a pay period, or when "X" is entered in the Enter X To Cancel field. A check is automatically sent to the payee listed on the template. The Remarks field can contain up to twelve characters and can be used to enter additional information such as the court case, account number, or other required data pertaining to the payment. The Employee Payment Count field indicates the number of Child Support Payments currently being deducted, up to a maximum of three payments.

<u>Steps to Reach Child Support Payments</u>

1. At the Main Menu, select **2** - Payroll.
2. At the Payroll Main Menu, select **2** - MER.
3. At the Master Employee Record Data Entry Menu, select **1** - Master Selection MER Menu.
4. At the Master Selection MER Menu, select **12** - Child Support Payments.

Steps to Retrieve, Add, Change, or Cancel a Second or Third Child Support Payment

1. Enter the employee's SSN and press **ENTER**. Then press **PF8** to view the next Child Support Payments screen. Fill in or change this screen as desired.
2. Each of the three Child Support Payments screens represents an individual deduction.

4.2.2.1.13 Commercial Garnishments

```
COMMAND: ________                    NPPS
NAO1254                COMMERCIAL GARNISHMENTS - GARNISH
--------------------------------------------------------------------------------
     SSN      PAYBLK   FUNC          LAST NAME                FIRST NAME    I
 ___ __ ____            R            ______________________   ____________  _

                        *** COMMERCIAL GARNISHMENTS ***

TOTAL PP DEDUCTION:                                EMPLOYEE PAYMENT COUNT: 1 OF 0
CURR DED:
REQUESTED DED: _____________ TOTAL TO BE DED: _____________ DED CUM: _____________

PAYEE NAME: _____________________________________
ADDRESS: _____________________________________
CITY: _________________   STATE: ___   ZIP: _____ - ____
REMARKS: _____________                                     ENTER X TO CANCEL: _

--------------------------------------------------------------------------------
FUNCTIONS:   C= CHANGE       N= NAME SEARCH       R= RETRIEVE       S= SUSPEND
 PF1= HELP           PF3= PREV SCREEN   PF4= QNORM            PF5= MAIN MENU
 PF7= BACKWARD       PF8= FORWARD       PF9= QREG             PF12= END
```

Commercial Garnishments (GARNISH)

DESCRIPTION AND EXECUTION

The Commercial Garnishments template is used to set up and maintain the biweekly deduction amount and total commercial debts amount for as many as 9 deductions to repay commercial debts to creditors. A Commercial Garnishments ceases automatically when the Ded Cum field equals the Total To Be Ded field, or when "X" is entered in the Enter X to Cancel field. The remarks field can contain up to twelve characters and can be used to enter additional information.

<u>Steps to Reach Commercial Garnishments</u>

1. At the Main Menu, select **2** - Payroll.
2. At the Payroll Main Menu, select **2** - MER.
3. At the Master Employee Record Data Entry Menu, select **1** - Master Selection MER Menu.
4. At the Master Selection MER Menu, select **13** - Commercial Garnishments.

To retrieve, add, change, or cancel a second through ninth deduction, use the Backward and Forward PF keys to move from one deduction screen to another. Each of the nine Commercial Garnishments screens represents an individual deduction. The Employee Payment Count field indicates the number of Commercial Garnishments deductions, currently taken from the employee's salary.

4.2.2.2 Adjustments

NPPS provides the capability to adjust current pay period earnings, accumulations of earnings, accumulation of deductions, accumulation of hours worked, and leave balances.

Current Pay Period Earnings Adjustments - Identifies the prior pay period date to be associated with the earnings adjustments. NPPS also provides the capability to apply the adjustment amount to the corresponding accumulation data field. Computed earnings amounts are maintained separately from the adjustment amounts. Following are the current pay period earnings adjustments.

- Earnings and Refunds Adjustments
- Cost of Living Allowance (COLA) and Foreign Differential
- Current TSP Adjustments
- Employee Insurance Adjustments
- Other Deductions Adjustments
- Lump Sum Leave/Reactivations
- Permanent Change of Station (PCS) Travel Adjustment Biweekly (B/W)

Accumulations Adjustments - Automatically increments accumulations of earning and deductions, paid and unpaid leave accumulations, work hour accumulations, and accumulations associated with limited appointments. Following are the accumulations adjustments.

- Annual Leave
- Compensatory Time
- Religious Compensatory Time
- Credit Hours
- Leave Without Pay Hours
- Restored Leave
- Sick Leave
- Continuation of Pay Leave
- Donated Annual Leave

- Home Leave
- Other Leave Used YTD
- Time Off Awards
- Extended Compensatory Time
- Former State Taxes
- Former City Tax
- YTD Earnings and Premium Hours Worked
- YTD Leave Cost
- YTD Deductions
- YTD Retirement Adjustments
- YTD Deductions TSP
- Appointment Limitations

4.2.2.2.1 Earnings and Refunds Adjustments

```
COMMAND: ________                    NPPS
NAO1211             EARNINGS AND REFUNDS ADJUSTMENTS - ADJ   1 OF 2
--------------------------------------------------------------------------------
     SSN      PAYBLK   FUNC           LAST NAME                FIRST NAME    I
 ___ __ ____           _             ____________________     ____________  _
 EARNINGS     HOURS    AMOUNT          REMARKS                 CURRENT PP B/W
ADJ BASIC:  ________  _________                                BASE:
    BASIC:  ________  _________   ___________________________  GROSS:
LOCAL PAY:  ________  _________   ___________________________  PAID FLSA:
OVERTIME:   ________  _________   ___________________________  STAT CUT:
HOL WRK:    ________  _________   ___________________________  EIC PYMT:
HAZARDOUS:  ________  _________   ___________________________
SUN DIFF:   ________  _________   ___________________________
NIGHT DIFF: ________  _________   ___________________________
                          *** HOURLY RATES ***
ADJ BASIC:        OT:       ND:            SD:      HD:         PCA:
  WG SH 2:        WG SH 3:        HEAD AGENCY:   AVAIL:         LOC PAY:
--------------------------------------------------------------------------------
FUNCTIONS:       C= CHANGE      N= NAME SEARCH      R= RETRIEVE      S= SUSPEND
 PF1= HELP          PF3= PREV SCREEN         PF5= MAIN MENU       PF7= BACKWARD
 PF8= FORWARD       PF9= QREG                PF12= END
```

Earnings and Refunds Adjustments - ADJ (Page 1)

```
COMMAND: ________                    NPPS
NAO1211             EARNINGS AND REFUNDS ADJUSTMENTS - ADJ   2 OF 2
--------------------------------------------------------------------------------
     SSN      PAYBLK   FUNC           LAST NAME                FIRST NAME    I
 ___ __ ____             R           ____________________     ____________  _
 EARNINGS     HOURS    AMOUNT          REMARKS                 CURRENT PP B/W
FF/LE PREM:           _________   ___________________________  BASE:
FORGN DIFF:           _________   ___________________________  GROSS:
EIC:                  _________   ___________________________  PAID FLSA:
COLA:                 _________   ___________________________  STAT CUT:
SUPER DIFF:           _________   ___________________________  EIC PYMT:
RET ALLOW:            _________   ___________________________
STAFF DIFF:           _________   ___________________________
AUO:                  _________   ___________________________
AVAILABILITY PAY:     _________   ___________________________
PCA:                  _________   ___________________________
                                                   HAZARDOUS TABLE CODE:  _
--------------------------------------------------------------------------------
FUNCTIONS:       C= CHANGE      N= NAME SEARCH      R= RETRIEVE      S= SUSPEND
 PF1= HELP          PF3= PREV SCREEN         PF5= MAIN MENU       PF7= BACKWARD
 PF8= FORWARD       PF9= QREG                PF12= END
```

Earnings and Refunds Adjustments - ADJ (Page 2)

DESCRIPTION AND EXECUTION

The Earnings and Refunds Adjustments (ADJ) templates are used to adjust an employee's earnings due to that employee for one pay period. If hours are entered with no amount, the amount of the adjustment will be computed using the appropriate hourly rate. If the amount is already present and the hours are changed, the amount must be blanked out in order for the system to recompute the amount. The hours will not be recomputed based on a change in the amount. A Hazardous Rate Code must be entered if an employee is to receive hazardous pay.

Steps to Reach Earnings and Refunds Adjustments

1. At the Main Menu, select **2** - Payroll.
2. At the Payroll Main Menu, select **2** - MER.
3. At the Master Employee Record Data Entry Menu, select **1** - Master Selection MER Menu.
4. At the Master Selection MER Menu, select **16** –Earnings and Refunds Adj.

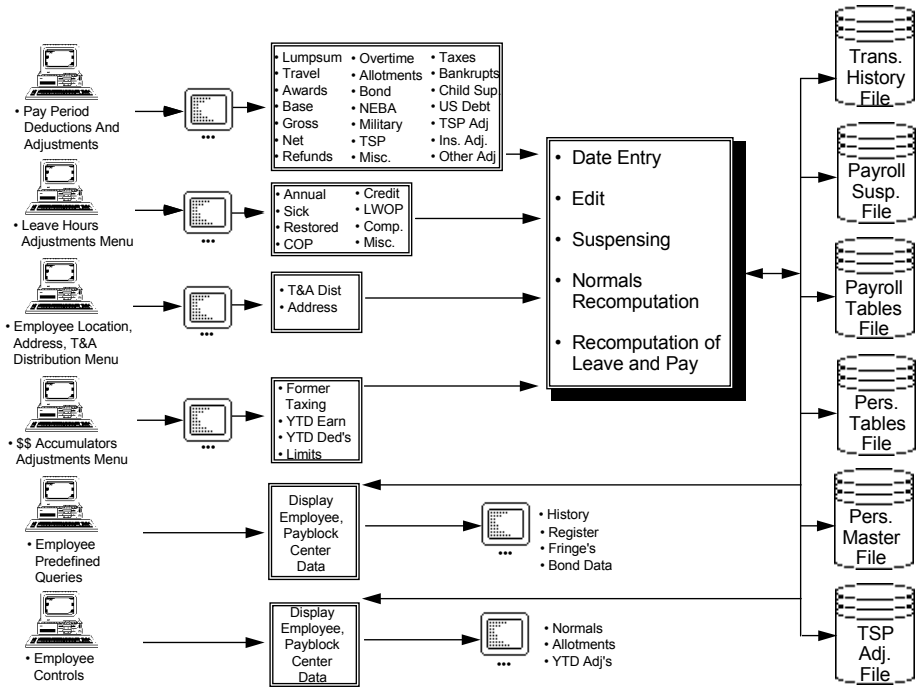
• Pay Period Deductions And Adjustments
• Lumpsum
• Travel
• Awards
• Base
• Gross
• Net
• Refunds
• Overtime
• Allotments
• Bond
• NEBA
• Military
• TSP
• Misc.
• Taxes
• Bankrupts
• Child Sup
• US Debt
• TSP Adj
• Ins. Adj.
• Other Adj
• Leave Hours Adjustments Menu
• Annual
• Sick
• Restored
• COP
• Credit
• LWOP
• Comp.
• Misc.
• Employee Location, Address, T&A Distribution Menu
• T&A Dist
• Address
• $$ Accumulators Adjustments Menu
• Former Taxing
• YTD Earn
• YTD Ded's
• Limits
• Employee Predefined Queries
Display Employee, Payblock Center Data
• History
• Register
• Fringe's
• Bond Data
• Employee Controls
Display Employee, Payblock Center Data
• Normals
• Allotments
• YTD Adj's
• Date Entry
• Edit
• Suspensing
• Normals Recomputation
• Recomputation of Leave and Pay
Trans. History File
Payroll Susp. File
Payroll Tables File
Pers. Tables File
Pers. Master File
TSP Adj. File

4.2.2.2.2 COLA and Foreign Differential

```
COMMAND: ________                    NPPS
NAO1213              COLA AND FOREIGN DIFFERENTIAL - COLA
--------------------------------------------------------------------------------


     SSN      PAYBLK   FUNC            LAST NAME                FIRST NAME    I
 ___ __ ____    __       R             ______________________   ____________  _



     COST OF LIVING ALLOWANCE                 FOREIGN DIFFERENTIAL

   RATE         BIWEEKLY AMOUNT                       RATE

  ______                                          ______



--------------------------------------------------------------------------------
FUNCTIONS:       C= CHANGE      N= NAME SEARCH      R= RETRIEVE      S= SUSPEND
 PF1= HELP          PF3= PREV SCREEN   PF4= QNORM            PF5= MAIN MENU
 PF9= QREG          PF12= END
```

COLA and Foreign Differential (COLA)

DESCRIPTION AND EXECUTION

The COLA and Foreign Differential (COLA) template is used to display (or establish) and update an employee's COLA and Foreign Differential rate for each pay period.

<u>Steps to Reach COLA and Foreign Differential</u>

1. At the Main Menu, select **2** - Payroll.
2. At the Payroll Main Menu, select **2** - MER.
3. At the Master Employee Record Data Entry Menu, select **1** - Master Selection MER Menu.
4. At the Master Selection MER Menu, select **17** - COLA and Foreign Differential.

4.2.2.2.3 Current TSP Adjustments

```
COMMAND: ________                    NPPS
 NAO1261                CURRENT TSP ADJUSTMENTS - TSPADJ
 ------------------------------------------------------------------------------
      SSN       PAYBLK   FUNC          LAST NAME                FIRST NAME    I
  ___ __ ____              _           _______________________  ____________  _

 RETIRE PLAN:                  TSP STATUS:            ADJUSTMENT TYPE: __
 EFF PAY DATE: _____0                                    (16, 26, 46) (86, 29, 88)
           ADJ. AMOUNT                                     YEAR-TO-DATE
 EMP ADJ: ________0.00                                    EMP:        0.00
 GB ADJ:  ________0.00                                    GB:         0.00
 GM ADJ:  ________0.00                                    GM:         0.00
  TOTAL:          0.00

 ---------- CURRENT PAY PERIOD ADJUSTMENT SUMMARY, TSP TYPE 16,26,46, 86,29,88 -
 EMP ADJ:         0.00
 GB ADJ:          0.00
 GM ADJ:          0.00
  TOTAL:          0.00
 ------------------------------------------------------------------------------
  FUNC:   A= ADD   C= CHG   D= DEL   N= NAME SEARCH   R= RETRIEVE   S= SUSPEND
  PF1= HELP   PF3= PREV   PF5= MAIN   PF7= UP   PF8= DWN   PF9= QREG   PF12= END
```

Current TSP and TSP Catch-Up Adjustments (TSPADJ)

DESCRIPTION AND EXECUTION

The Current TSP Adjustments (TSPADJ) template is used to make current period adjustments to an employee's TSP deduction and to create resubmissions of prior period TSP records that were rejected by the National Finance Center. Three adjustment types are allowed, corresponding to the three TSP record types 16, 26, and 46.

The 16 adjustment is a positive adjustment that is used to deduct and submit amounts omitted in prior periods. A TSP record type 16 will be generated to include this adjustment. Each adjustment must have a valid pay date in the EFF PAY DATE field. A separate adjustment should be made for each pay date. The amount of the 16 adjustment will reduce the employee's net pay.

The 16 adjustment record amount and any monies from the TSP DED: TRANS IN field will be included in a check against the TSP YEAR MAX DED amount to ensure that the adjustment will not exceed the maximum limit.

The 26 adjustment is a negative adjustment used to refund deductions taken erroneously and submitted in prior periods. Up to 26 adjustments may be entered in the current period. Each adjustment must have a valid pay date in the EFF PAY DATE field. If supporting payroll history data is present for the prior pay period being adjusted, the 26 adjustment amount must not be greater than the TSP deduction plus TSP adjustment taken in the effective period. If history data is not present, no edit for this condition is done.

The 46 adjustment is a positive adjustment used to create TSP record type 46 records to resubmit previously rejected TSP record type 16s. Up to 26

adjustments may be entered in the current period. Each adjustment must have a valid pay date for the current year in the EFF PAY DATE field. Forty-six adjustments do not affect employee net pay.

The Current TSP Adjustments (TSPADJ) template is used to make current period adjustments to an employee's TSP Catch-up deduction and to create resubmissions of prior period TSP Catch-up records that were rejected by the National Finance Center. Three adjustment types are allowed, corresponding to the three TSP Catch-up record types 86, 29, and 88.

The 86 adjustment is a positive adjustment that is used to deduct and submit amounts omitted in prior periods. A TSP Catch-up record type 86 will be generated to include this adjustment. Each adjustment must have a valid pay date in the EFF PAY DATE field. A separate adjustment should be made for each pay date. The amount of the 86 adjustment will reduce the employee's net pay.

The 86 adjustment record amount and any monies from the TSP Catch-Up DED: TRANS IN field will be included in a check against the TSP Catch-up YEAR MAX DED amount to ensure that the adjustment will not exceed the maximum limit.

The 29 adjustment is a negative adjustment used to refund deductions taken erroneously and submitted in prior periods. Up to 26 adjustments may be entered in the current period. Each adjustment must have a valid pay date in the EFF PAY DATE field. If supporting payroll history data is present for the prior pay period being adjusted, the 29 adjustment amount must not be greater than the TSP Catch-up deduction plus TSP Catch-up adjustment taken in the effective period. If history data is not present, no edit for this condition is done.

The 88 adjustment is a positive adjustment used to create TSP Catch-up record type 88 records to resubmit previously rejected TSP Catch-up record type 86s. Up to 26 adjustments may be entered in the current period. Each adjustment must have a valid pay date for the current year in the EFF PAY DATE field. Eighty-eight (88) adjustments do not affect employee net pay.

<u>Steps to Reach Current TSP Adjustments</u>

1. At the Main Menu, select **2** - Payroll.
2. At the Payroll Main Menu, select **2** - MER.
3. At the Master Employee Record Data Entry Menu, select **1** - Master Selection MER Menu.
4. At the Master Selection MER Menu, select **18** - Current TSP Adjustments.

4.2.2.2.4 Employee Insurance Adjustments

```
COMMAND: ________                    NPPS
NAO1262            EMPLOYEE INSURANCE ADJUSTMENTS - INSADJ   1 OF 2
--------------------------------------------------------------------------------

     SSN      PAYBLK   FUNC            LAST NAME                FIRST NAME    I
 ___ __ ____            _             ______________________   ____________  _

         ENTER 'X' IF FEHB ADJUSTMENT IS TAX EXEMPT _ ('X' OR BLANK)
PLAN     FEHB         EMPLOYEE     GOVT                    REMARKS
         CODE          AMOUNT     AMOUNT

CURRENT               ________   ________          ___________________________

PRIOR     ___         ________   ________          ___________________________

CASH
COLLECT   ___          _______    _______          ___________________________

--------------------------------------------------------------------------------
FUNCTIONS:     C= CHANGE        N= NAME SEARCH      R= RETRIEVE    S= SUSPEND
 PF1= HELP          PF3= PREV SCREEN     PF4= QNORM            PF5= MAIN MENU
 PF7= BACKWARD      PF8= FORWARD         PF9= QREG             PF12= END
```

Employee Insurance Adjustments - INSADJ (Page 1)

```
COMMAND: ________                    NPPS
NAO1262            EMPLOYEE INSURANCE ADJUSTMENTS - INSADJ   2 OF 2
--------------------------------------------------------------------------------

     SSN      PAYBLK   FUNC            LAST NAME                FIRST NAME    I
 ___ __ ____            R             ______________________   ____________  _

                                                          REMARKS
FEGLI GOVT CONT ADJUSTMENT:     ____________
FEGLI BASIC LIFE ADJUSTMENT:    ____________
FEGLI STAND OPTION A ADJUST:    ____________
FEGLI STAND OPTION B ADJUST:    ____________
FEGLI FAMILY ADJUSTMENT:        ____________          ______________________

FEGLI EMP DEDUCTION ADJUSTMENT:

          4-DAY RULE PERCENT:                     BIRTH DATE:

--------------------------------------------------------------------------------
FUNCTIONS:       C= CHANGE      N= NAME SEARCH      R= RETRIEVE     S= SUSPEND
 PF1= HELP          PF3= PREV SCREEN     PF4= QNORM            PF5= MAIN MENU
 PF7= BACKWARD      PF8= FORWARD         PF9= QREG             PF12= END
```

Employee Insurance Adjustments - INSADJ (Page 2)

DESCRIPTION AND EXECUTION

The Employee Insurance Adjustments (INSADJ) template is used to make adjustments to an employee's net pay for life insurance (FEGLI) and health benefits (FEHB). This template is also used to record FEHB cash collections for vouchering purposes.

Steps to Reach Employee Insurance Adjustments

1. At the Main Menu, select **2** - Payroll.
2. At the Payroll Main Menu, select **2** - MER.
3. At the Master Employee Record Data Entry Menu, select **1** - Master Selection MER Menu.
4. At the Master Selection MER Menu, select **19** - Employee Insurance Adjustments.

DESCRIPTION OF DATA PROCESSING RESULTS AND OUTPUT

A positive adjustment on this template will result in a collection from the employee or an increase in the government contribution. A negative adjustment has the opposite result.

The T&A process updates the 4-Day Rule Percent field, which is used for only two events: the hire of a new employee or the termination of an employee. This value is for the current pay period only and is reset to a blank during the initialization process for the next pay period.

4.2.2.2.5 Other Deductions Adjustments

```
COMMAND: ________                    NPPS
NAO1263         EMPLOYEE RETIREMENT ADJUSTMENTS - OTHADJ    1 OF 3
--------------------------------------------------------------------------------

     SSN      PAYBLK   FUNC            LAST NAME                FIRST NAME    I
 ___ __ ____            _             ______________________   ____________  _
RETIREMENT PLAN         EMPLOYEE       GOVERNMENT            REMARKS
                         AMOUNT         AMOUNT
 CURRENT PLAN:          ____________   ____________   ________________________
 FORMER PLAN:           ____________   ____________   ________________________
 FORMER PLAN CODE:  _
 CIVIL SERVICE CREDIT: ____________                   ________________________
          WAGES
 FICA
  ADJ:  ____________    ____________   ____________   ________________________
 HIT
  ADJ:  ____________    ____________   ____________   ________________________
 RETIREMENT PLAN CODE

--------------------------------------------------------------------------------
FUNCTIONS:    C= CHANGE       N= NAME SEARCH    R= RETRIEVE    S= SUSPEND
 PF1= HELP           PF3= PREV SCREEN     PF5= MAIN MENU       PF6= QYTDADJ
 PF7= BACKWARD       PF8= FORWARD         PF9= QREG            PF12= END
```

Other Deductions Adjustments - OTHADJ (Page 1)

```
COMMAND: ________                    NPPS
NAO1263            TAX WITHHOLDING ADJUSTMENTS - OTHADJ     2 OF 3
--------------------------------------------------------------------------------
     SSN      PAYBLK   FUNC            LAST NAME                FIRST NAME    I
 ___ __ ____             R            ______________________   ____________  _

TAXING ENTITY                  AMOUNT                       REMARKS

 FEDERAL:                   ____________           ________________________
 CURRENT STATE:             ____________           ________________________
 FORMER STATE:              ____________           ________________________
 FORMER STATE CODE:  __
 CURRENT CITY:              ____________           ________________________
 FORMER CITY:               ____________           ________________________
 FORMER CITY CODE:   ___    ____________           ________________________
 CURRENT COUNTY:            ____________           ________________________
--------------------------------------------------------------------------------
FUNCTIONS:    C= CHANGE       N= NAME SEARCH    R= RETRIEVE    S= SUSPEND
 PF1= HELP           PF3= PREV SCREEN     PF5= MAIN MENU       PF6= QYTDADJ
 PF7= BACKWARD       PF8= FORWARD         PF9= QREG            PF12= END
```

Other Deductions Adjustments - OTHADJ (Page 2)

```
COMMAND: ________                    NPPS
NAO1263                 OTHER ADJUSTMENTS - OTHADJ          3 OF 3
--------------------------------------------------------------------------------
     SSN      PAYBLK   FUNC            LAST NAME                FIRST NAME    I
 ___ __ ____            _             ______________________  ____________  _

                        EMPLOYEE AMT   GOVT AMT               REMARKS
 ADVANCE PAY DED:      _____________                    ___________________________
 BILL OF COLLECT:      _____________                    ___________________________
 CFC:                  _____________                    ___________________________
 CSRS SALARY OFFSET:                  _____________    ___________________________
 FERS SALARY OFFSET:                  _____________    ___________________________
 TSP LOAN 1:           _____________                    ___________________________
 TSP LOAN 2:           _____________                    ___________________________
 UNION DUES:           _____________                    ___________________________
           RETIREMENT PLAN CODE:             ANNUITANT INDICATOR:
           SALARY OFFSET:
--------------------------------------------------------------------------------
FUNCTIONS:    C= CHANGE       N= NAME SEARCH    R= RETRIEVE    S= SUSPEND
 PF1= HELP           PF3= PREV SCREEN     PF5= MAIN MENU       PF6= QYTDADJ
 PF7= BACKWARD       PF8= FORWARD         PF9= QREG            PF12= END
```

Other Deductions Adjustments - OTHADJ (Page 3)

DESCRIPTION AND EXECUTION

The Other Deductions Adjustments (OTHADJ) template is used to make adjustments to an employee's net pay for items listed on the screen.

Steps to Reach Other Deductions Adjustments

1. At the Main Menu, select **2** - Payroll.
2. At the Payroll Main Menu, select **2** - MER.
3. At the Master Employee Record Data Entry Menu, select **1** - Master Selection MER Menu.
4. At the Master Selection MER Menu, select **20** - Other Deductions Adjustments.

NPPS uses three screens to display the list of Other Deduction Adjustments. When you request this template, NPPS will always display the first screen. You may move forward by pressing **PF8** and backward by pressing **PF7**.

DESCRIPTION OF DATA PROCESSING OUTPUT AND RESULTS

A positive adjustment on this template will result in a collection from the employee or an increase in the government contribution. A negative adjustment has the opposite result.

4.2.2.2.6 Lump Sum Leave/Reactivations

```
COMMAND: ________                    NPPS
NAO1270              LUMP SUM LEAVE/REACTIVATIONS - LUMP

--------------------------------------------------------------------------------

     SSN      PAYBLK   FUNC            LAST NAME                FIRST NAME    I
 ___ __ ____    __       R             ______________________   ____________  _
ENTER R TO REACTIVATE INACTIVE EMPLOYEE:  _
     **** ADJUSTMENTS ****                  **** CURRENT PAY PERIOD B/W ****
LUMP SUM LEAVE HOURS 1:     _______          BASE EARNINGS:
HOURLY RATE 1:               ______          GROSS EARNINGS:
COMPUTED EARNINGS 1:                                PAID FLSA:
LUMP SUM LEAVE HOURS 2:     _______          NET EARNINGS:
HOURLY RATE 2:               ______          STAT CUTBACK:
COMPUTED EARNINGS 2:                         CURRENT EIC PYMT:
ENTER Y TO DEDUCT ___% FED TAX:   _
PRIOR PERIOD ADJ:  _______
                                         RESTORED HOURS:  _______
       SEPARATION DATE:  _______       NOAC: ___       DUTY STATUS: _

--------------------------------------------------------------------------------
FUNCTIONS:   A= ADD CHN   C= CHANGE   N= NAME SEARCH   R= RETRIEVE   S= SUSPEND
 PF1= HELP          PF3= PREV SCREEN   PF5= MAIN MENU        PF9= QREG
 PF12= END
```

Lump Sum Leave/Reactivations (LUMP)

DESCRIPTION AND EXECUTION

The Lump Sum Leave/Reactivations (LUMP) template is used to change an employee's status to reactivated or to establish and change lump sum leave adjustments. The Lump Sum Leave hourly rates are determined and input by the pay clerk. NPPS will then compute the correct amount of pay. If a "Y" is entered to deduct federal tax on the lump sum leave payment, the federal tax on regular pay is computed using the supplemental wages federal tax rate from the “99” record on the TTAX table. Otherwise, the tax table and the employee's W-4 will be used to compute the tax withholding amounts for the lump sum amount along with the regular gross earnings. Use of the Prior Period Adj function will result in pay for the employee. Reactivation is for the current pay period only and is required to pay lump sum earnings for an employee terminated in a prior period (Duty Status = "Z" and Reactivation Indicator = 3). A reactivated employee's net pay will be computed when the employee's lump sum leave transaction is entered. Lump sum pay for an employee terminating in the current pay period (Duty Status = "Z" and Reactivation Indicator = 0) will be computed when the employee's T&A transaction is entered. If the terminating employee's termination date is prior to the current pay period, the lump sum pay will be computed when the transaction is entered.

Steps to Reach Lump Sum Leave/Reactivations

1. At the Main Menu, select **2** - Payroll.
2. At the Payroll Main Menu, select **2** - MER.
3. At the Master Employee Record Data Entry Menu, select **1** - Master Selection MER Menu.
4. At the Master Selection MER Menu, select **21** - Lump Sum Leave/ Reactivations.

4.2.2.2.7 PCS Travel Adjustment B/W

```
COMMAND: ________                    NPPS
NAO1280                PCS TRAVEL ADJUSTMENT B/W - PCS
--------------------------------------------------------------------------------

     SSN      PAYBLK   FUNC            LAST NAME                FIRST NAME    I
 ___ __ ____    __       R             _______________________  ____________  _


  PCS EARNINGS NOT-SUBJ-TAX:      ___________
  PCS SUBJ-FED-TAX:               ___________
  PCS SUBJ-STATE-TAX:             ___________
  PCS SUBJ-CITY-TAX:              ___________
  PCS SUBJ-COUNTY-TAX:            ___________
  PCS HIT EARNINGS:               ___________
  PCS FICA EARNINGS:              ___________
  PCS FEDERAL TAX WH:             ___________
  PCS HIT WH:                     ___________
  PCS FICA WH:                    ___________
  PCS STATE TAX WH:               ___________
  PCS CITY TAX WH:                ___________
  PCS COUNTY TAX WH:              ___________


--------------------------------------------------------------------------------
FUNCTIONS:       C= CHANGE      N= NAME SEARCH      R= RETRIEVE      S= SUSPEND
 PF1= HELP          PF3= PREV SCREEN   PF5= MAIN MENU        PF12= END
```

PCS Travel Adjustment B/W (PCS)

DESCRIPTION AND EXECUTION

The PCS Travel Adjustment B/W (PCS) template is used to establish an employee's PCS travel amounts for the current pay period. The corresponding accumulation will be automatically updated.

<u>Steps to Reach PCS Travel Adjustment B/W</u>

1. At the Main Menu, select **2** - Payroll.
2. At the Payroll Main Menu, select **2** - MER.
3. At the Master Employee Record Data Entry Menu, select **1** - Master Selection MER Menu.
4. At the Master Selection MER Menu, select **22** - PCS Travel Adjustment B/W.

4.2.2.2.8 Annual Leave

```
*  SPECIFY SSN OR FUNCTION = N 'NAME SEARCH'


COMMAND: ________                    NPPS
NAO1310                        ANNUAL LEAVE - AL
-------------------------------------------------------------------------------
     SSN      PAYBLK   FUNC            LAST NAME                FIRST NAME    I
 ___ __ ____            R              _________________________ _____________  _
  PRIOR YEAR CARRY-OVER: ________    PRIOR PP DATE: ______    CEILING: ________
  ACCRUED YTD:           ____        DISALLOW ADVANCE LEAVE:        _
  USED YTD:              ________    (ENTER Y IF EMPLOYEE SHOULD NOT
  RIC YTD:               ____          RECEIVE ADVANCE ANNUAL LEAVE)
  RESTRICTED CURR BAL:               YTD ACCRUAL WHILE SES:  ___
  LEAVE DONATED YTD:     ________
  DONATED RETURNED YTD:  ________      (TOTAL PROJ) (DONATED BAL)   (TOTAL AL)
  ACCR AVAILABLE:                     +             +             =
  PT HOURS CARRY-OVER:     ______
DATE LAST CHANGED:             AL LEAVE CATEGORY:       HRS ACCRUAL PER     HRS
**************************** CURRENT PAY PERIOD ******************************
 EARNED:             DONAT RETURN:          USED:           PROJ USED:
    RIC:        EARNED RESTRICTED:                        DONATED USED:
-------------------------------------------------------------------------------
FUNCTIONS:    A= ADD CHN      C= CHANGE      N= NAME SEARCH      R= RETRIEVE
 PF1= HELP          PF3= PREV SCREEN   PF5= MAIN MENU        PF12= END
```

Annual Leave (AL)

DESCRIPTION AND EXECUTION

The Annual Leave (AL) template is used to display and update an employee's annual leave YTD information. A "Y" in the Disallow Advance Leave field allows an employee to use only earned annual leave and not the advanced annual leave. During the personnel mature process, this field will be set to "Y" when Duty Status changes from any value to "Y." While an employee is in transferred leave status, (Total Proj) will show a zero value. The balance shown in the Restricted Curr Bal field will become zero the pay period after the cancellation of the medical emergency and the (Total Proj) field will assume its normal value. The YTD Accrual While SES field accumulates annual leave earned after the SES appointment during the same leave year the appointment was made. This allows NPPS to determine the annual leave balance subject to the annual leave ceiling at year-end.

<u>Steps to Reach Annual Leave</u>

1. At the Main Menu, select **2** - Payroll.
2. At the Payroll Main Menu, select **2** - MER.
3. At the Master Employee Record Data Entry Menu, select **1** - Master Selection MER Menu.
4. At the Master Selection MER Menu, select **23** - Annual Leave.

4.2.2.2.9 Compensatory Time

```
*   SPECIFY SSN OR FUNCTION = N 'NAME SEARCH'


COMMAND: ________                    NPPS
NAO1320                    COMPENSATORY TIME - CT
-------------------------------------------------------------------------------
     SSN      PAYBLK   FUNC            LAST NAME                FIRST NAME    I
 ___ __ ____            R             _______________________  _____________  _
PRIOR PP DATE: ______
                     *******  COMPENSATORY HOURS  *******         PYCO BALANCE
                   EARNED     USED    FORFEITED   PAID       CUT     ________
PRIMARY CUR HOURS:
EXTENDED CUR HRS:
PRIMARY YTD HOURS: _______   _______   _______   _______   _______
EXTENDED YTD HRS:            _______   _______
   PERIOD-1.1 PERIOD-1.2 PERIOD-1.3 PERIOD-1.4 PERIOD-1.5 PERIOD-1.6 PERIOD-1.7
     _______    _______    _______    _______    _______    _______    _______
RATE:  _____      _____      _____      _____      _____      _____      _____
                         PRIMARY CT BALANCE
                        EXTENDED CT BALANCE
                         TOTAL AVAILABLE CT
-------------------------------------------------------------------------------
FUNCTIONS:    A= ADD CHN      C= CHANGE      N= NAME SEARCH      R= RETRIEVE
 PF1= HELP          PF3= PREV SCREEN       PF5= MAIN MENU        PF12= END
```

Compensatory Time (CT)

DESCRIPTION AND EXECUTION

The Compensatory Time (CT) template is used to display and update an employee's compensatory time information. The system automatically places the compensatory time earned in the Period-1.1 field along with the employee's current overtime pay rate per hour. If these CT hours are not used, they will automatically be moved to the next Period "bucket," along with the associated pay rate, when each pay period is processed. After seven periods, if the employee is an FLSA employee, the hours will be paid to the employee at the associated rate of pay. If the employee is not an FLSA employee, the hours will be forfeited from Period-1.7 and a forfeited CT record will be written. This forfeited CT record may have the time permitted for use by an employee extended by changing the Extended Thru Date using the EXTCT and MASEXTCT templates. Also, the comp time extensions process will automatically extend these forfeited CT records for an additional 7 pay periods.

Refer to the Description and Execution sections of the EXTCT and MASEXTCT templates.

The total primary CT balance available, a totaling of the seven CT period "buckets," is shown on the CT screen along with the total extended CT balance available from all of an employee's extended CT records. These two totals are then, in turn, totaled together at the bottom of the screen.

Steps to Reach Compensatory Time

1. At the Main Menu, select **2** - Payroll.
2. At the Payroll Main Menu, select **2** - MER.
3. At the Master Employee Record Data Entry Menu, select **1** - Master Selection MER Menu.
4. At the Master Selection MER Menu, select **24** - Compensatory Time.

4.2.2.2.10 Religious Compensatory Time

```
*   SPECIFY SSN OR FUNCTION = N 'NAME SEARCH'


COMMAND: ________                    NPPS
NAO1330               RELIGIOUS COMPENSATORY TIME - RCT
-------------------------------------------------------------------------------

     SSN      PAYBLK   FUNC            LAST NAME                FIRST NAME    I
___ __ ____             R             ______________________  ____________  _

 PRIOR PP DATE: ______
                              ****  COMPENSATORY HOURS ****
                              EARNED      USED    FORFEITED
            CURRENT HOURS:
            HOURS YTD:        _______    _______    _______
            BALANCE:

PERIOD-1.1 PERIOD-1.2 PERIOD-1.3 PERIOD-1.4 PERIOD-1.5 PERIOD-1.6 PERIOD-1.7
________   ________   ________   ________   ________   ________   ________


-------------------------------------------------------------------------------
FUNCTIONS:      A= ADD CHN      C= CHANGE      N= NAME SEARCH      R= RETRIEVE
 PF1= HELP        PF3= PREV SCREEN        PF5= MAIN MENU        PF12= END
```

Religious Compensatory Time (RCT)

DESCRIPTION AND EXECUTION

The Religious Compensatory Time (RCT) template is used to display and update an employee's religious compensatory time information. The system automatically places the religious compensatory time earned in Period-1.1, and automatically moves one period each pay period unless it is used. After seven periods, the hours are lost. If religious compensatory time is taken before it is earned, the hours are placed in Period-1.1 with a negative sign. The hours will remain there until sufficient earned hours offset the negative balance to zero.

<u>Steps to Reach Religious Compensatory Time</u>

1. At the Main Menu, select **2** - Payroll.
2. At the Payroll Main Menu, select **2** - MER.
3. At the Master Employee Record Data Entry Menu, select **1** - Master Selection MER Menu.
4. At the Master Selection MER Menu, select **25** - Religious Compensatory Time.

4.2.2.2.11 Credit Hours

```
*   SPECIFY SSN OR FUNCTION = N 'NAME SEARCH'


COMMAND: ________                    NPPS
NAO1340                     CREDIT HOURS - CREDIT
-------------------------------------------------------------------------------
     SSN      PAYBLK   FUNC            LAST NAME                FIRST NAME    I
 ___ __ ____            R             _______________________  ____________  _

PRIOR PP DATE: ______
                         PYCO:              ________
                         EARNED YTD:         _______
                         USED YTD:           _______
                         FORFEITED YTD:      _______
                         BALANCE:

            FLEXI TOUR (Y OR BLANK):  _

***************************** CURRENT PAY PERIOD *****************************

           EARNED:            USED:              FORFEITED:
-------------------------------------------------------------------------------
FUNCTIONS:      A= ADD CHN      C= CHANGE      N= NAME SEARCH      R= RETRIEVE
 PF1= HELP        PF3= PREV SCREEN        PF5= MAIN MENU        PF12= END
```

Credit Hours (CREDIT)

DESCRIPTION AND EXECUTION

The Credit Hours (CREDIT) template is used to display and update an employee's credit hour information. Credit hours are earned only by employees on Flexi Tour.

<u>Steps to Reach Credit Hours</u>

1. At the Main Menu, select **2** - Payroll.
2. At the Payroll Main Menu, select **2** - MER.
3. At the Master Employee Record Data Entry Menu, select **1** - Master Selection MER Menu.
4. At the Master Selection MER Menu, select **26** - Credit Hours.

4.2.2.2.12 Leave Without Pay Hours

```
*   SPECIFY SSN OR FUNCTION = N 'NAME SEARCH'


COMMAND: ________                    NPPS
NAO1350                LEAVE WITHOUT PAY HOURS - LWOP
-------------------------------------------------------------------------------

     SSN      PAYBLK   FUNC            LAST NAME                FIRST NAME    I
 ___ __ ____            R             ______________________  ____________  _

PRIOR PP DATE: ______
                       LWOP USED YTD:        _______
                       SCD HOURS:            _______
                       WIG HOURS:            _______
                       WIG EXCESS HOURS:     _______
                       EIGHTY-HOUR ACCRUAL:  _______
                       CURRENT PP LWOP:


   NTE DATE:                                  PART TIME HOURS:
   GRADE:                                     STEP:
-------------------------------------------------------------------------------
FUNCTIONS:      A= ADD CHN      C= CHANGE      N= NAME SEARCH      R= RETRIEVE
 PF1= HELP          PF3= PREV SCREEN   PF5= MAIN MENU        PF12= END
```

Leave Without Pay Hours (LWOP)

DESCRIPTION AND EXECUTION

The Leave Without Pay Hours (LWOP) template is used to display and update an employee's LWOP information.

<u>Steps to Reach Leave Without Pay Hours</u>

1. At the Main Menu, select **2** - Payroll.
2. At the Payroll Main Menu, select **2** - MER.
3. At the Master Employee Record Data Entry Menu, select **1** - Master Selection MER Menu.
4. At the Master Selection MER Menu, select **27** - Leave Without Pay Hours.

4.2.2.2.13 Restored Leave

```
*   SPECIFY SSN OR FUNCTION = N 'NAME SEARCH'


COMMAND: ________                    NPPS
NAO1360                    RESTORED LEAVE - RESTLV
-------------------------------------------------------------------------------
     SSN     PAYBLK FUNC  LAST NAME              FIRST NAME   I   PRIOR PP DATE
 ___ __ ____          R  ______________________ ____________ _    _________
             ************ RESTORED *************  ********** USED ***********
ACCT EXPIRE  A   HOURS    B  HOURS    C  HOURS     CURR       YTD       CUM
 1  ________  _  _______  _  _______  _  _______             _______   _______
 2  ________  _  _______  _  _______  _  _______             _______   _______
 3  ________  _  _______  _  _______  _  _______             _______   _______
                                          TOTAL
PYCO RESTORED HRS: _______     RESTORED YTD: _______      BALANCE:
                  ******** DONATED ********     **** DONATED RETURNED ****
ACCT   EXPIRE        CURR            CUM           CURR            CUM
 1                                 _______                       _______
 2                                 _______                       _______
 3                                 _______                       _______
              DONATED YTD: _______     DONATED RETD YTD: _______
-------------------------------------------------------------------------------
FUNCTIONS:      A= ADD CHN      C= CHANGE      N= NAME SEARCH      R= RETRIEVE
 PF1= HELP          PF3= PREV SCREEN          PF5= MAIN MENU          PF12= END
```

Restored Leave (RESTLV)

DESCRIPTION AND EXECUTION

The Restored Leave (RESTLV) template is used to display and update an employee's restored leave information for up to three separate accounts. Each account can have up to three types of reasons for restoration of annual leave (e.g., illness or administrative error).

<u>Steps to Reach Restored Leave</u>

1. At the Main Menu, select **2** - Payroll.
2. At the Payroll Main Menu, select **2** - MER.
3. At the Master Employee Record Data Entry Menu, select **1** - Master Selection MER Menu.
4. At the Master Selection MER Menu, select **28** - Restored Leave.

The balance of the three accounts is computed as follows:
Hours Restored - Cum Used - Cum Donated + Cum Returned.

4.2.2.2.14 Sick Leave

```
* SPECIFY SSN OR FUNCTION = N 'NAME SEARCH'


COMMAND: ________                    NPPS
NAO1370                        SICK LEAVE - SL
-------------------------------------------------------------------------------
     SSN      PAYBLK   FUNC            LAST NAME                FIRST NAME    I
 ___ __ ____            R              ______________________  ____________  _

PRIOR PP DATE: ______        ADV TOTAL:      _______    AVAILABLE FOR USE:
 PYCO:         ________      ADV USED CUM:   _______
 ACCRUED YTD:    ___         ADV BALANCE:               ACCR AVAIL:
 USED YTD:      _______      ADV PYCO OWED:  _______    ADV BALANCE:
 RIC YTD:        ___         ADV USED YTD:   _______    ADV EXPIRED:
 RESTRICTED BAL:             ADV REPAID YTD: _______
 ACCR AVAIL:                 ADV BAL OWED:               SICK LV BAL:
                             ADV DATE LIMIT: ________
 PT HOURS CO:    ______
***************************** CURRENT PAY PERIOD ******************************
EARNED:                USED:               RIC:              ADV USED:
ADV REPAID:                 EARNED RESTRICTED:
-------------------------------------------------------------------------------
FUNCTIONS:      A= ADD CHN      C= CHANGE      N= NAME SEARCH      R= RETRIEVE
 PF1= HELP          PF3= PREV SCREEN   PF5= MAIN MENU        PF12= END
```

Sick Leave (SL)

DESCRIPTION AND EXECUTION

The Sick Leave (SL) template is used to display and update an employee's sick leave information.

<u>Steps to Reach Sick Leave</u>

1. At the Main Menu, select **2** - Payroll
2. At the Payroll Main Menu, select **2** - MER.
3. At the Master Employee Record Data Entry Menu, select **1** - Master Selection MER Menu.
4. At the Master Selection MER Menu, select **29** - Sick Leave.

4.2.2.2.15 Continuation of Pay Leave

```
COMMAND: ________                    NPPS
NAO1380                CONTINUATION OF PAY LEAVE - COP
--------------------------------------------------------------------------------
     SSN      PAYBLK   FUNC            LAST NAME                FIRST NAME    I
 ___ __ ____            _             ______________________  ____________  _

PRIOR PP DATE: ______
              DATE       HOURS      YTD       INJURY
              LIMIT     ALLOWED     USED      TO DATE   BALANCE

INJURY 1:   ________    _______    _______    _______
INJURY 2:   ________    _______    _______    _______
INJURY 3:   ________    _______    _______    _______
                       --------   --------   --------   ---------
       TOTALS:


        TOTAL COP LEAVE PAID YTD: ________       CURRENT B/W COP USED:
--------------------------------------------------------------------------------
FUNCTIONS:   A= ADD CHN   C= CHANGE   N= NAME SEARCH   R= RETRIEVE   S= SUSPEND
 PF1= HELP          PF3= PREV SCREEN   PF5= MAIN MENU        PF12= END
```

Continuation of Pay Leave (COP)

DESCRIPTION AND EXECUTION

The Continuation of Pay Leave (COP) template is used to display and update an employee's Continuation of Pay (COP) information. Up to three injuries and associated information are allowed. The pay clerk must manually adjust the COP hours to the proper account on this template. The individual account fields are totaled for display only. A separate field, Total COP Leave Paid YTD, is provided for information and update since it is not updated from the individual account fields. The Total COP Leave Paid YTD should always be adjusted to equal the sum of the YTD used.

Steps to Reach Continuation of Pay Leave

1. At the Main Menu, select **2** - Payroll.
2. At the Payroll Main Menu, select **2** - MER.
3. At the Master Employee Record Data Entry Menu, select **1** - Master Selection MER Menu.
4. At the Master Selection MER Menu, select **30** - Continuation of Pay Leave.

4.2.2.2.16 Donated Annual Leave

```
COMMAND: ________                    NPPS
NAO1383                DONATED ANNUAL LEAVE - RECIPIEN
-------------------------------------------------------------------------------
     SSN      PAYBLK   FUNC            LAST NAME               FIRST NAME    I
 ___ __ ____            _            _______________________  _____________  _
EFF DATE: ________   REASON: _    ENDING DATE: ________ TERM DATE: ________
PRIOR PP DATE: ______                                   ........CUM COST.......
                              ******** REMARKS ******** :     DOLLARS     HRS
PYCO:              ________   ___________________________ DIR: __________  _______
RECEIVED YTD:      ________   ___________________________ IND: __________  _______
USED YTD:          ________   ___________________________ -----------------------
RETURNED YTD:      ________   ___________________________
BALANCE:                      ___________________________    .. DONATED HOURS ..
................RESTRICTED...................              CURRENT    CUMULATIVE
:      CURR EARNED     CURR BAL  TRANSFERED :    RECEIVED:           ________
: ANNUAL:              ________              :        USED:           ________
:   SICK:              ________              :    RETURNED:           ________
:        PROJECTED AL:                       :     DONATED:           ________
-------------------------------------------------------------------------------
FUNCTIONS:  A= ADD CHAIN  C= CHANGE  N= NAME SEARCH  R= RETRIEVE  S= SUSPEND
 PF1= HELP  PF2= MASDONOR   PF3= PREV SCREEN    PF5= MAIN MENU    PF12= END
```

Donated Annual Leave (RECIPIEN)

DESCRIPTION AND EXECUTION

The Donated Annual Leave (RECIPIEN) template is used to display and update an employee's donated leave information. The leave hours are given by fellow employees to those in urgent need of additional leave hours.

This template is used to establish an employee's eligibility to use donated leave, to adjust accumulations, if necessary, and to cancel the eligibility. The Eff Date and Reason must be entered to establish eligibility. An employee may receive (using MASDONOR) donated leave when an effective date and reason code have been entered. Valid reason codes are E (employee related emergency) and F (family related emergency). An employee may use donated leave beginning the pay period inside of which the effective date falls. The last pay period the employee may use donated leave is the pay period in which the Ending Date falls. The last pay period the employee may accept donated leave is the one in which the Term Date falls. During the time that the employee is eligible to use donated leave, advanced annual leave is not allowed. If the Reason Code = E, advanced sick leave will also be disallowed. The pay period accrual of annual leave will be restricted up to 40 hours for full-time employees and up to the employee's weekly scheduled tour of duty for part-time and uncommon tour employees. After 40 hours have been accumulated as restricted leave, additional accruals will be used to reduce any negative annual leave balance to zero. When the annual leave balance is greater than or equal to zero, additional accruals will be available for use and will be used before using any available donated leave balance. If the Reason Code = E, these restrictions will also apply to sick leave. In the pay period after the eligibility for donated leave has been canceled, the restricted leave will be made available for use. The

transfer of the restricted leave from restricted to available for use will be done during the pay period initialization process. Other donated leave processing, such as restricting the accruals, will be processed by the pay and leave computation process when the employee's T&A is entered. The Cum Cost fields are for data entry only. NPPS does not compute values for these fields. The recipient receives donations of annual leave and returns unused donated leave through the MASDONOR template.

Steps to Reach Donated Annual Leave

1. At the Main Menu, select **2** - Payroll.
2. At the Payroll Main Menu, select **2** - MER.
3. At the Master Employee Record Data Entry Menu, select **1** - Master Selection MER Menu.
4. At the Master Selection MER Menu, select **31** - Donated Annual Leave.

4.2.2.2.17 Home Leave

```
COMMAND: ________                    NPPS
NAO1382                       HOME LEAVE - HOMELV
-------------------------------------------------------------------------------


     SSN      PAYBLK   FUNC            LAST NAME                FIRST NAME    I
 ___ __ ____    __       R             _______________________  ____________  _

PRIOR PP DATE: ______

                        HOURS EARNED:              _______
                        HOURS USED (CUM):          _______
                        CURRENT BALANCE:
                        LAST LEAVE ACCRUAL DATE:   ______
                        ACCRUAL RATE:              __
                        HOURS USED YTD:            _______



-------------------------------------------------------------------------------
FUNCTIONS:  A= ADD CHN   C= CHANGE   N= NAME SEARCH   R= RETRIEVE   S= SUSPEND
 PF1= HELP          PF3= PREV SCREEN         PF5= MAIN MENU       PF12= END
```

Home Leave (HOMELV)

DESCRIPTION AND EXECUTION

The Home Leave (HOMELV) template is used to display and update an employee's home leave information. Home leave is earned when an employee's tour is outside the US.

<u>Steps to Reach Home Leave</u>

1. At the Main Menu, select **2** - Payroll.
2. At the Payroll Main Menu, select **2** - MER.
3. At the Master Employee Record Data Entry Menu, select **1** - Master Selection MER Menu.
4. At the Master Selection MER Menu, select **32** - Home Leave.

4.2.2.2.18 Other Leave Used YTD

```
COMMAND: ________                    NPPS
NAO1390                OTHER LEAVE USED YTD - OTHLV
-------------------------------------------------------------------------------

     SSN      PAYBLK   FUNC            LAST NAME                FIRST NAME    I
 ___ __ ____            _             _______________________  ____________  _

PRIOR PP DATE: ______
                                                   YTD ADMIN:     ________
   ** FYTD MILITARY LEAVE HOURS**                  YTD AWOL:      ________
   PYCO:      ________  CUR PP USED: ________      YTD COURT:     ________
   CUR FY:    ________                             YTD EXCUSED:   ________
   FYTD USED: ________                             YTD GRADUATE:  ________
                                                   YTD HOLIDAY:   ________
   BALANCE:                                        YTD JURY:      ________
                                                   YTD MILITARY:  ________
                                                   YTD SUSPENDED: ________
   CUR PP HRS USED:                                YTD TIME OFF:
-------------------------------------------------------------------------------
FUNCTIONS:  A= ADD CHN   C= CHANGE   N= NAME SEARCH   R= RETRIEVE   S= SUSPEND
 PF1= HELP          PF3= PREV SCREEN        PF5= MAIN MENU      PF12= END
```

Other Leave Used YTD (OTHLV)

DESCRIPTION AND EXECUTION

The Other Leave Used YTD (OTHLV) template is used to display and update an employee's other leave information. These leave hours are not found on the other named leave templates (e.g., jury and administrative leave). NPPS records military leave in hours;. the non-duty weekend days may not be counted against the control total.

<u>Steps to Reach Other Leave Used YTD</u>

1. At the Main Menu, select **2** - Payroll.
2. At the Payroll Main Menu, select **2** - MER.
3. At the Master Employee Record Data Entry Menu, select **1** - Master Selection MER Menu.
4. At the Master Selection MER Menu, select **33** - Other Leave Used YTD.

4.2.2.2.19 Time Off Awards

```
COMMAND: ________                    NPPS
NAO1395                     TIME OFF AWARDS - TOA
-------------------------------------------------------------------------------
     SSN     PAYBLK     FUNC           LAST NAME                FIRST NAME    I
 100 00 0001   09        R             FEAKINS_______________   RANDY_______  C

 NTE DATE     AWD HRS    CUR USED   YTD USED   CUM USED   CUR FORF   YTD FORF
                                    _______    _______               _______
                                    _______    _______               _______
                                    _______    _______               _______
                                    _______    _______               _______
                                    _______    _______               _______
                                    _______    _______               _______
                                    _______    _______               _______
                                    _______    _______               _______
                                    _______    _______               _______
                                    _______    _______               _______
   TOTAL
                                       BALANCE
-------------------------------------------------------------------------------
FUNCTIONS:  C= CHANGE           N= NAME SEARCH           R= RETRIEVE
 PF1= HELP         PF3= PREV SCREEN         PF5= MAIN MENU         PF12= END
```

Time Off Awards (TOA)

DESCRIPTION AND EXECUTION

The Time Off Awards (TOA) template is used to retrieve and display the time off award and usage fields for an individual employee. The accumulators for time off used and forfeited may be modified.

<u>Steps to Reach Time Off Awards</u>

1. At the Main Menu, select **2** - Payroll.
2. At the Payroll Main Menu, select **2** - MER.
3. At the Master Employee Record Data Entry Menu, select **1** - Master Selection MER Menu.
4. At the Master Selection MER Menu, select **34** - Time Off Awards.

4.2.2.2.20 Extended Compensatory Time

```
COMMAND: ________                    NPPS                                  14:13:10
NAO1321                EXTENDED COMPENSATORY TIME - EXTCT
      ---------------------------------------------------------------------------
                       EXTENDED      ORIGINAL
     SSN      PAYBLK   THRU DATE     FRFTD DTE      FUNC
 ___ __ ____           ________      ________         _

 LAST NAME               FIRST NAME    I   HOURS TO          ORIGINAL
 ______________________  ____________  _    EXTEND   ______ HRS FRFTD

      ST    EXTENDED..............................      CUM      CUM
      CD    YEARPP     EARN DTE     RATE    HOURS      USED    FRFTD   BALANCE
             ______    ________    ______   ______    ______

                                             CURRENT    USED     FRFTD


-------------------------------------------------------------------------------
FUNCTION:  A= ADD    C= CHANGE    D= DELETE    N= NAME SEARCH    R= RETRIEVE
 PF1= HELP        PF3= PREV SCREEN         PF5= MAIN MENU        PF12= END
```

Extended Compensatory Time (EXTCT)

DESCRIPTION AND EXECUTION

The Extended Compensatory Time (EXTCT) template is used to display and change information contained in an employee's extended/forfeited CT records. A major purpose of EXTCT is to extend the time an employee is permitted to use compensatory time. When CT hours are forfeited, a record is written with a null Extended Thru Date. This null date, or a previously entered Extended Thru Date, may be extended by typing in a desired future date into this field. The YEARPP field will be calculated from this Extended Thru Date if both the Extended Thru Date and the YEARPP fields are present. If the Extended Thru Date is not present, and the YEARPP field is entered, the Extended Thru Date will be calculated from YEARPP. Updates via EXTCT will not be permitted if the employee has a "good" T&A status at the time the EXTCT update is attempted. Extended/forfeited CT records may be added, changed, or deleted with the use of EXTCT.

Access to an extended/forfeited CT record may be made by entering an employees SSN, the Extended Thru Date, and the Original Frftd Date into the EXTCT template fields. An easier access method is to go first to the MASEXTCT template which will display all records associated with an employee, and then select the record to be processed.

Partial hours may be extended via this screen. If the record has never been extended, the partial hours can be used to extend any amount of the forfeited hours. If a partial amount has already been extended, then any amount of the forfeited hours can be extended for a new extended thru date if the old extended thru date has not been passed.

Steps to Reach Extended Compensatory Time

1. At the Main Menu, select **2** - Payroll.
2. At the Payroll Main Menu, select **2** - MER.
3. At the Master Employee Record Data Entry Menu, select **1** - Master Selection MER Menu.
4. At the Master Selection MER Menu, select **35** - Extended Compensatory Time.

4.2.2.2.21 Former State Taxes

```
* SPECIFY SSN OR FUNCTION = N 'NAME SEARCH'

COMMAND: ________                    NPPS
NAO1410                 FORMER STATE TAXES – FORMSTX    1 OF 3
-------------------------------------------------------------------------------

     SSN      PAYBLK   FUNC    LAST NAME                FIRST NAME    I
 ___ __ ____            R              ______________________  ____________  _

                            *** YTD FORMER STATE ***
 STATE   GROSS     TSP    TAXABLE      WH       PCS WH  PCS EARN    PCS EARNING
 CODE    EARN      DED    EARNINGS   TAKEN      TAKEN   SUBJ WH     NOT SUBJ
  __    ________  ______  __________ __________ ______  ________    ___________
  __    ________  ______  __________ __________ ______  ________    ___________
  __    ________  ______  __________ __________ ______  ________    ___________

       TAX EXEMPT           TAX EXEMPT  TAX EXEMPT
        FEHB      TFBP      FSA HC      FSA DC
       _________ __________ ___________ ____________   PCS EARNING NOT SUBJ
       _________ __________ ___________ ____________   WH --  ONLY APPLIES TO
       _________ __________ ___________ ____________   YTD VALUES
-------------------------------------------------------------------------------
FUNCTIONS:  A= ADD CHN   C= CHANGE   N= NAME SEARCH   R= RETRIEVE   S= SUSPEND
 PF1= HELP          PF3= PREV SCREEN        PF5= MAIN MENU      PF12= END
```

Former State Taxes (FORMSTX)

DESCRIPTION AND EXECUTION

The Former State Taxes (FORMSTX) template is used to change an employee's former state taxes. Former state tax information can be entered for up to three states. Initially, this information is created automatically when an employee changes state taxing entities.

<u>Steps to Reach Former State Taxes</u>

1. At the Main Menu, select **2** - Payroll.
2. At the Payroll Main Menu, select **2** - MER.
3. At the Master Employee Record Data Entry Menu, select **1** - Master Selection MER Menu.
4. At the Master Selection MER Menu, select **36** - Former State Taxes.

4.2.2.2.22 Former City and County Taxes

```
* SPECIFY SSN OR FUNCTION = N 'NAME SEARCH'

COMMAND: ________                    NPPS
NAO1420            FORMER CITY AND COUNTY TAXES - FORMCTX    1 OF 6
--------------------------------------------------------------------------------
     SSN      PAYBLK   FUNC            LAST NAME                FIRST NAME    I
 ___ __ ____            R             ______________________  ____________  _


                              *** YTD CITY ***

TAX     GROSS     TSP     TAXABLE     WH     PCS WH    PCS EARN    PCS EARNINGS
CODE    EARN      DED     EARNINGS   TAKEN   TAKEN     SUBJ WH     NOT SUBJ WH
 ___  __________ _______ __________ ______ ________  __________  _____________
 ___  __________ _______ __________ ______ ________  __________  _____________
 ___  __________ _______ __________ ______ ________  __________  _____________

     TAX EXEMPT              TAX EXEMPT  TAX EXEMPT
       FEHB          TFBP      FSA HC      FSA DC      PCS EARNING NOT SUBJ WH --
     __________      _________                          ONLY APPLIES TO YTD
       __________      _________
       __________      _________

   --------------------------------------------------------------------------------
---
 FUNCTIONS:  A= ADD CHN   C= CHANGE   N= NAME SEARCH   R= RETRIEVE   S= SUSPEND
  PF1= HELP          PF3= PREV SCREEN     PF5= MAIN MENU      PF12= END
```

Former City and County Taxes (FORMCTX)

DESCRIPTION AND EXECUTION

The Former City and County Taxes (FORMCTX) template is used to change an employee's former city and county taxes. Initially, this information is created automatically when an employee changes city/county taxing entities.

<u>Steps to Reach Former City and County Taxes</u>

1. At the Main Menu, select **2** - Payroll.
2. At the Payroll Main Menu, select **2** - MER.
3. At the Master Employee Record Data Entry Menu, select **1** - Master Selection MER Menu.
4. At the Master Selection MER Menu, select **37** - Former City and County Taxes.

4.2.2.2.23 YTD Earnings and Premium Hours Worked

```
* SPECIFY SSN OR FUNCTION = N 'NAME SEARCH'

COMMAND: ________                    NPPS
NAO1431     YTD EARNINGS AND PREMIUM HOURS WORKED - YTDADJ1  1 OF 5
-------------------------------------------------------------------------------
     SSN      PAYBLK  FUNC            LAST NAME                FIRST NAME    I
 ___ __ ____            R             ____________________  ____________  _
AUO                       BOND REFUND                 COLA QTD
  AUO ADJ    ____________   BOND ADJ    ____________   QTD ADJ     ____________
AVAIL PAY                 CITY GROSS                  CNTY GROSS
  AVAIL ADJ  ____________   TAX ADJ     ____________   TAX ADJ     ____________
AWARD YTD                 CITY GRS MTD                CNTY GRS MTD
  YTD ADJ    ____________   MTD ADJ     ____________   MTD ADJ     ____________
AWARD NET                 CITY GRS QTD                CNTY GRS QTD
  NET ADJ    ____________   QTD ADJ     ____________   QTD ADJ     ____________
BASE TRS IN               COLA                        EIC PYMNT
  TR IN ADJ  ____________   COLA ADJ    ____________   EIC ADJ     ____________
BASE
  BASE ADJ   ____________
-------------------------------------------------------------------------------
FUNCTIONS:  A= ADD CHN   C= CHANGE   N= NAME SEARCH   R= RETRIEVE   S= SUSPEND
 PF1= HELP           PF3= PREV SCREEN       PF5= MAIN MENU       PF6= QYTDADJ
 PF7= BACKWARD       PF8= FORWARD           PF12= END
```

YTD Earnings and Premium Hours Worked - YTDADJ1 (Page 1)

```
COMMAND: ________                    NPPS
NAO1431     YTD EARNINGS AND PREMIUM HOURS WORKED - YTDADJ1  2 OF 5
-------------------------------------------------------------------------------
     SSN      PAYBLK  FUNC            LAST NAME                FIRST NAME    I

FERS                      FOREIGN DIFF                HIT QTD
  FERS ADJ   ____________   FOR ADJ    ____________   QTD ADJ     ____________
FICA                      GROSS                       HOLIDAY
  FICA ADJ   ____________   GROSS ADJ  ____________   HOL ADJ     ____________
FICA QTD                  HAZARDOUS                   HOLIDAY HRS
  QTD ADJ    ____________   HAZ ADJ    ____________   HRS ADJ     ____________
FICA TRAN IN              HAZARDOUS HR                LOCAL PAY
  TRS IN     ____________   HRS ADJ    ____________   LOC ADJ     ____________
FIREFIGHTER               HIT                         LOCAL TRS IN
  FIRE ADJ   ____________   HIT ADJ    ____________   TR IN ADJ   ____________


-------------------------------------------------------------------------------
FUNCTIONS:  A= ADD CHN   C= CHANGE   N= NAME SEARCH   R= RETRIEVE   S= SUSPEND
 PF1= HELP           PF3= PREV SCREEN       PF5= MAIN MENU       PF6= QTYDADJ
 PF7= BACKWARD       PF8= FORWARD           PF12= END
```

YTD Earnings and Premium Hours Worked - YTDADJ1 (Page 2)

```
COMMAND: ________                    NPPS
NAO1431     YTD EARNINGS AND PREMIUM HOURS WORKED - YTDADJ1  3 OF 5
--------------------------------------------------------------------------------
     SSN      PAYBLK  FUNC            LAST NAME               FIRST NAME    I
                       R
LUMP SUM LV              OVERTIME HR                PCS NS CNTY
  SUM ADJ    ____________  HR ADJ      ____________   CNTY ADJ    ____________
                         PCA          ____________
                           PCA ADJ    ____________               ____________
NET ERNGS                PCS NS CITY                 PCS CNTY
  NET ADJ    ____________  CITY ADJ    ____________   YTD ADJ     ____________
NIGHT DIFF               PCS CITY                   PCS CNTY QTD
  NIGHT ADJ  ____________  YTD ADJ     ____________   QTD ADJ     ____________
NIGHT DI HR              PCS CITY QTD               PCS CNTY MTD
  HR ADJ     ____________  QTD ADJ     ____________   MTD ADJ     ____________
OVERTIME                 PCS CITY MTD               PCS FICA
  OT ADJ     ____________  MTD ADJ     ____________   FICA ADJ    ____________
                                                    PCS FICA QTD
                                                      QTD ADJ     ____________
--------------------------------------------------------------------------------
FUNCTIONS:  A= ADD CHN   C= CHANGE   N= NAME SEARCH   R= RETRIEVE   S= SUSPEND
 PF1= HELP           PF3= PREV SCREEN       PF5= MAIN MENU       PF6= QYTDADJ
 PF7= BACKWARD       PF8= FORWARD           PF12= END
```

YTD Earnings and Premium Hours Worked - YTDADJ1 (Page 3)

```
COMMAND: ________                    NPPS
NAO1431     YTD EARNINGS AND PREMIUM HOURS WORKED - YTDADJ1  4 OF 5
--------------------------------------------------------------------------------
     SSN      PAYBLK  FUNC            LAST NAME               FIRST NAME    I

PCS HIT                    PCS NS FED                 ST GROSS QTD
  HIT ADJ    ____________   FED ADJ    ____________   QTD ADJ    ____________
PCS HIT QTD                PCS FED                    STAFF DIFF
  QTD ADJ    ____________   YTD ADJ    ____________   STF ADJ    ____________
PCS NS STATE               PCS FED QTD                STATUTORY CT
  ST ADJ     ____________   QTD ADJ    ____________   CT ADJ     ____________
PCS STATE                  RETEN ALLOW                SUNDAY DIFF
  YTD ADJ    ____________   ALLOW ADJ  ____________   SUNDAY ADJ ____________
PCS ST QTD                 STATE GROSS                SUN DIF HR
  QTD ADJ    ____________   TAX ADJ    ____________   DIFF HR    ____________
PCS ST MTD                 ST GROSS MTD
  MTD ADJ    ____________   MTD ADJ    ____________


--------------------------------------------------------------------------------
FUNCTIONS:  A= ADD CHN   C= CHANGE   N= NAME SEARCH   R= RETRIEVE   S= SUSPEND
 PF1= HELP           PF3= PREV SCREEN       PF5= MAIN MENU       PF6= QYTDADJ
 PF7= BACKWARD       PF8= FORWARD           PF12= END
```

YTD Earnings and Premium Hours Worked - YTDADJ1 (Page 4)

```
COMMAND: ________                    NPPS
NAO1431     YTD EARNINGS AND PREMIUM HOURS WORKED - YTDADJ1  5 OF 5
--------------------------------------------------------------------------------
     SSN      PAYBLK  FUNC            LAST NAME               FIRST NAME    I

SUPER DIFF                TXBLE CI MTD               TXBLE STATE
  DIFF ADJ   ____________   MTD ADJ     ____________   YTD ADJ     ____________
TAXABLE                   TXBLE CI QTD               TXBLE ST MTD
  TAX ADJ    ____________   QTD ADJ     ____________   MTD ADJ     ____________
TAXABLE MTD               TXBLE CNTY                 TXBLE ST QTD
  MTD ADJ    ____________   YTD ADJ     ____________   QTD ADJ     ____________
TAXABLE QTD               TXBLE CT MTD
  QTD ADJ    ____________   MTD ADJ     ____________
TXBLE CITY                TXBLE CT QTD
  YTD ADJ    ____________   QTD ADJ     ____________


--------------------------------------------------------------------------------
FUNCTIONS:  A= ADD CHN   C= CHANGE   N= NAME SEARCH   R= RETRIEVE   S= SUSPEND
 PF1= HELP           PF3= PREV SCREEN       PF5= MAIN MENU       PF6= QYTDADJ
 PF7= BACKWARD       PF8= FORWARD           PF12= END
```

YTD Earnings and Premium Hours Worked - YTDADJ1 (Page 5)

```
COMMAND: ________                    NPPS
NAO1431     YTD EARNINGS AND PREMIUM HOURS WORKED - YTDADJ1  6 OF 6
--------------------------------------------------------------------------------
     SSN      PAYBLK  FUNC            LAST NAME               FIRST NAME    I

SLR YTD GROSS:
      SLR ADJ:       ____________

SLR QTD:
      SLR QTD ADJ:   ____________

SLR MTD:
      SLR MTD ADJ:   ____________



--------------------------------------------------------------------------------
FUNCTIONS:  A= ADD CHN   C= CHANGE   N= NAME SEARCH   R= RETRIEVE   S= SUSPEND
 PF1= HELP           PF3= PREV SCREEN       PF5= MAIN MENU       PF6= QYTDADJ
 PF7= BACKWARD       PF8= FORWARD           PF12= END
```

YTD Earnings and Premium Hours Worked - YTDADJ1 (Page 6)

DESCRIPTION AND EXECUTION

The YTD Earnings and Premium Hours Worked (YTDADJ1) template is used to change an employee's YTD, QTD, and month-to-date (MTD) earnings and premium hours worked information.

<u>Steps to Reach YTD Earnings and Premium Hours Worked</u>

1. At the Main Menu, select **2** - Payroll.
2. At the Payroll Main Menu, select **2** - MER.

3. At the Master Employee Record Data Entry Menu, select **1** - Master Selection MER Menu.
4. At the Master Selection MER Menu, select **38** - YTD Earnings and Premium Hours Worked.

This template is composed of four screens. You may move forward by pressing **PF8** and backward by pressing **PF7**.

4.2.2.2.24 YTD Leave Cost

```
COMMAND: ________                    NPPS
NAO1432                    YTD LEAVE COST - YTDLVCT       1 OF 2
--------------------------------------------------------------------------------

     SSN      PAYBLK   FUNC            LAST NAME                FIRST NAME    I
 ___ __ ____            _             _______________________  ____________  _

ADMINISTRATIVE LV:                       GRADUATE LEAVE:
  ADMIN ADJ          ____________          GRAD ADJ           ____________
ANNUAL LEAVE:                            HOLIDAY LEAVE:
  ANN ADJ            ____________          HOLI ADJ           ____________
COMP TIME:                               HOME LEAVE:
  CT ADJ             ____________          HOME ADJ           ____________
CREDIT:                                  JURY LEAVE:
  CRD ADJ            ____________          JURY ADJ           ____________
EXCUSED LEAVE:                           MILITARY LEAVE:
  EXCUSED ADJ        ____________          MIL ADJ            ____________


--------------------------------------------------------------------------------
FUNCTIONS:  A= ADD CHN   C= CHANGE   N= NAME SEARCH   R= RETRIEVE   S= SUSPEND
 PF1= HELP           PF3= PREV SCREEN       PF5= MAIN MENU      PF7= BACKWARD
 PF8= FORWARD        PF12= END
```

YTD Leave Cost 1 (YTDLVCT)

```
COMMAND: ________                    NPPS
NAO1432                    YTD LEAVE COST - YTDLVCT       2 OF 2
--------------------------------------------------------------------------------
     SSN      PAYBLK   FUNC            LAST NAME                FIRST NAME    I



RELIG COMP TIME:                         TRAUMATIC INJURY 1:
  RCT ADJ            ____________          INJ1 ADJ           ____________
RESTORED LEAVE:                          TRAUMATIC INJURY 2:
  REST ADJ           ____________          INJ2 ADJ           ____________
SICK LEAVE:                              TRAUMATIC INJURY 3:
  SICK ADJ           ____________          INJ3 ADJ           ____________
TIME OFF AWARD:
  TIME OFF ADJ:      ____________

--------------------------------------------------------------------------------
FUNCTIONS:  A= ADD CHN   C= CHANGE   N= NAME SEARCH   R= RETRIEVE   S= SUSPEND
 PF1= HELP           PF3= PREV SCREEN       PF5= MAIN MENU      PF7= BACKWARD
 PF8= FORWARD        PF12= END
```

YTD Leave Cost 2 (YTDLVCT)

DESCRIPTION AND EXECUTION

The YTD Leave Cost (YTDLVCT) template is used to change an employee's YTD leave cost information.

Steps to Reach YTD Leave Cost

1. At the Main Menu, select **2** - Payroll.
2. At the Payroll Main Menu, select **2** - MER.
3. At the Master Employee Record Data Entry Menu, select **1** - Master Selection MER Menu.
4. At the Master Selection MER Menu, select **39** - YTD Leave Cost.

This template is composed of two screens. You may move forward by pressing **PF8** or backward by pressing **PF7**.

4.2.2.2.25 YTD Deductions

```
COMMAND: ________                    NPPS
NAO1441                  YTD DEDUCTIONS - YTDDED1       1 OF 78
--------------------------------------------------------------------------------
     SSN      PAYBLK   FUNC            LAST NAME               FIRST NAME    I
 ___ __ ____            R              ____________________  ____________  _
ADV PAY                   CFC                          CNTY TAX
  ADV ADJ     ____________  CFC ADJ    ____________    TAX ADJ     ____________
ADV PAY CUM               CHILD SUP                    CNTY TAX MTD
  CUM ADJ     ____________  CHILD ADJ  ____________    MTD ADJ     ____________
BANKRUPTCY                COM GARNISH                  CNTY TAX QTD
  BANK ADJ    ____________  GARN ADJ   ____________    QTD ADJ     ____________
BANKRUPT CUM              CITY TAX                     FED TAX
  CUM ADJ     ____________  TAX ADJ    ____________    FED ADJ     ____________
BILL OF COLL              CITY TAX MTD                 FED TAX QTD
  BILL ADJ    ____________  MTD ADJ    ____________    QTD ADJ     ____________
BOND                      CITY TAX QTD
  BOND ADJ    ____________  QTD ADJ    ____________
--------------------------------------------------------------------------------
FUNCTIONS:  A= ADD CHN   C= CHANGE   N= NAME SEARCH   R= RETRIEVE   S= SUSPEND
 PF1= HELP          PF3= PREV SCREEN   PF5= MAIN MENU        PF6= QYTDADJ
 PF7= BACKWARD      PF8= FORWARD       PF12= END
```

YTD Deductions 1 (YTDDED1)

```
COMMAND: ________                    NPPS
NAO1441                  YTD DEDUCTIONS - YTDDED1       2 OF 78
--------------------------------------------------------------------------------
     SSN      PAYBLK   FUNC            LAST NAME               FIRST NAME    I
 ___ __ ____            R              ____________________  ____________  _
FEGLI GOVT                FEHB GOVT                    HIT
  GOVT ADJ    ____________  GOVT ADJ   ____________    HIT ADJ     ____________
FEGLI BASIC               FICA                         HIT QTD
  BASIC ADJ   ____________  FICA ADJ   ____________    QTD ADJ     ____________
FEGLI OPTA                FICA QTD                     HIT GOVT
  OPTA ADJ    ____________  QTD ADJ    ____________    GOVT ADJ    ____________
FEGLI OPTB                FICA GOVT                    HIT GOVT QTD
  OPTB ADJ    ____________  GOVT ADJ   ____________    QTD ADJ     ____________
FEGLI OPTC                FICA GOV QTD
  OPTC ADJ    ____________  QTD ADJ    ____________
FEHB                      FICA TRS
  FEHB ADJ    ____________  TRS ADJ    ____________
--------------------------------------------------------------------------------
FUNCTIONS:  A= ADD CHN   C= CHANGE   N= NAME SEARCH   R= RETRIEVE   S= SUSPEND
 PF1= HELP          PF3= PREV SCREEN   PF5= MAIN MENU        PF6= QYTDADJ
 PF7= BACKWARD      PF8= FORWARD       PF12= END
```

YTD Deductions 2 (YTDDED1)

```
COMMAND: ________                    NPPS
NAO1441                  YTD DEDUCTIONS - YTDDED1       3 OF 78
--------------------------------------------------------------------------------
     SSN      PAYBLK   FUNC            LAST NAME                FIRST NAME    I
 ___ __ ____            R              ______________________  ____________  _
INDEBT                    NEBA BAS QTD              PCS CITY TAX
  INDEBT ADJ  ____________  BAS QTD ADJ ____________  CITY ADJ     ____________
MISC                      NEBA OPT QTD              PCS CITY MTD
  MISC ADJ    ____________  OPT QTD ADJ ____________  MTD ADJ      ____________
NEBA BASIC                NEBA SP QTD               PCS CITY QTD
  NEBA ADJ    ____________  SP QTD ADJ  ____________  QTD ADJ      ____________
NEBA OPTION               NEBA TOT QTD              PCS CNTY TAX
  OPT ADJ     ____________  QTD TOT ADJ ____________  CNTY ADJ     ____________
NEBA SPOUSE               NEBA TR                   PCS CNTY MTD
  SP YTD ADJ  ____________  TR ADJ      ____________  MTD ADJ      ____________
NEBA TOTAL                NEBA TRV QTD              PCS CNTY QTD
  TOT ADJ     ____________  TR QTD ADJ  ____________  QTD ADJ      ____________
--------------------------------------------------------------------------------
FUNCTIONS:  A= ADD CHN   C= CHANGE   N= NAME SEARCH   R= RETRIEVE   S= SUSPEND
 PF1= HELP          PF3= PREV SCREEN   PF5= MAIN MENU        PF6= QYTDADJ
 PF7= BACKWARD      PF8= FORWARD       PF12= END
```

YTD Deductions 3 (YTDDED1)

```
COMMAND:  ________                   NPPS
NAO1441                  YTD DEDUCTIONS - YTDDED1       4 OF 78
--------------------------------------------------------------------------------
     SSN      PAYBLK   FUNC            LAST NAME                FIRST NAME    I
 ___ __ ____            R              ______________________  ____________  _
PCS ST TAX                PCS HIT                   STATE TX QTD
  ST ADJ      ____________   HIT ADJ    ____________  QTD ADJ      ____________
PCS ST MTD                PCS HIT QTD               STATE TX MTD
  MTD ADJ     ____________   QTD ADJ    ____________  MTD ADJ      ____________
PCS ST QTD                PCS FICA                  TSP LN CUM1
  QTD ADJ     ____________   FICA ADJ   ____________  CUM1 ADJ     ____________
PCS FED TAX               PCS FICA QTD              TSP LN CUM2
  FED ADJ     ____________   QTD ADJ    ____________  CUM2 ADJ     ____________
PCS F TX QTD              STATE TAX                 TSP LN DED1
  QTD ADJ     ____________   TAX ADJ    ____________  DED1 ADJ     ____________


--------------------------------------------------------------------------------
FUNCTIONS:  A= ADD CHN   C= CHANGE   N= NAME SEARCH   R= RETRIEVE   S= SUSPEND
 PF1= HELP          PF3= PREV SCREEN   PF5= MAIN MENU        PF6= QYTDADJ
 PF7= BACKWARD      PF8= FORWARD       PF12= END
```

YTD Deductions 4 (YTDDED1)

```
COMMAND:  ________                    NPPS
NAO1441                   YTD DEDUCTIONS - YTDDED1       5 OF 78
--------------------------------------------------------------------------------
     SSN      PAYBLK   FUNC            LAST NAME                FIRST NAME    I
 ___ __ ____            R             _______________________  ____________  _
TSP LN DED2                 LTC EMPLOYEE
  DED2 ADJ    ____________
TSP TRS IN                  LTC SPOUSE
  TSP ADJ     ____________
UNION DUES                  LTC DEPENDENT
  DUES ADJ    ____________
VOL ALLOT
  ALLOT ADJ   ____________




--------------------------------------------------------------------------------
FUNCTIONS:  A= ADD CHN   C= CHANGE   N= NAME SEARCH   R= RETRIEVE   S= SUSPEND
 PF1= HELP          PF3= PREV SCREEN   PF5= MAIN MENU        PF6= QYTDADJ
 PF7= BACKWARD      PF8= FORWARD       PF12= END
```

YTD Deductions 5 (YTDDED1)

```
COMMAND:  ________                    NPPS
NAO1441                   YTD DEDUCTIONS - YTDDED1       6 OF 78
--------------------------------------------------------------------------------
     SSN      PAYBLK   FUNC            LAST NAME                FIRST NAME    I
 ___ __ ____            R             _______________________  ____________  _
YTD FTAX EX FEHB                 YTD CTAX EX FEHB
YTD FTAX EX FEHB ADJ      ________________ YTD CTAX EX FEHB ADJ________________
QTD FTAX EX FEHB                 MTD CTAX EX FEHB
QTD FTAX EX FEHB ADJ      ________________ MTD CTAX EX FEHB ADJ________________
YTD STAX EX FEHB                 QTD CTAX EX FEHB
YTD STAX EX FEHB ADJ      ________________ QTD CTAX EX FEHB ADJ________________
MTD STAX EX FEHB
MTD STAX EX FEHB ADJ      ________________
QTD STAX EX FEHB
QTD STAX EX FEHB ADJ      ________________


--------------------------------------------------------------------------------
FUNCTIONS:  A= ADD CHN   C= CHANGE   N= NAME SEARCH   R= RETRIEVE   S= SUSPEND
 PF1= HELP          PF3= PREV SCREEN   PF5= MAIN MENU        PF6= QYTDADJ
 PF7= BACKWARD      PF8= FORWARD       PF12= END
```

YTD Deductions 6 (YTDDED1)

```
COMMAND: _________                    NPPS
 NAO1441                    YTD DEDUCTIONS - YTDDED1        7 OF 7
 ------------------------------------------------------------------------------
      SSN       PAYBLK   FUNC            LAST NAME                FIRST NAME    I
                         R
 YTD FTAX EX FSA HC                YTD FTAX EX FSA DC
 QTD FTAX EX FSA HC                QTD FTAX EX FSA DC
 YTD STAX EX FSA HC                YTD STAX EX FSA DC
 MTD STAX EX FSA HC                MTD STAX EX FSA DC
 QTD STAX EX FSA HC                QTD STAX EX FSA DC
 YTD CTAX EX FSA HC                YTD CTAX EX FSA DC
 MTD CTAX EX FSA HC                MTD CTAX EX FSA DC
 QTD CTAX EX FSA HC                QTD CTAX EX FSA DC
 ------------------------------------------------------------------------------
 FUNCTIONS:  A= ADD CHN   C= CHANGE   N= NAME SEARCH   R= RETRIEVE   S= SUSPEND
  PF1= HELP          PF3= PREV SCREEN   PF5= MAIN MENU        PF6= QYTDADJ
  PF7= BACKWARD      PF8= FORWARD       PF12= END
```

```
                                                                    04-01-29
COMMAND: _________                    NPPS                            14:43:49
NAO1441                    YTD DEDUCTIONS - YTDDED1       7 OF 8
     ---------------------------------------------------------------------------
      SSN       PAYBLK   FUNC            LAST NAME                FIRST NAME    I
  YTD FTAX EX FSA HC                    YTD CTAX EX FSA HC
    YTD FTAX EX FSA HC ADJ                YTD CTAX EX FSA HC ADJ
  QTD FTAX EX FSA HC                    MTD CTAX EX FSA HC
    QTD FTAX EX FSA HC ADJ                MTD CTAX EX FSA HC ADJ
  YTD STAX EX FSA HC                    QTD CTAX EX FSA HC
    YTD STAX EX FSA HC ADJ                QTD CTAX EX FSA HC ADJ
  MTD STAX EX FSA HC
    MTD STAX EX FSA HC ADJ
  QTD STAX EX FSA HC
    QTD STAX EX FSA HC ADJ
---------------------------------------------------------------------------
FUNCTIONS:     A= ADD CHN   C= CHANGE     N= NAME SEARCH   R= RETRIEVE
 PF1= HELP          PF3= PREV SCREEN   PF5= MAIN MENU        PF6= QYTDADJ
 PF7= BACKWARD      PF8= FORWARD       PF12= END
```

YTD Deductions 7 (YTDDED1)

```
                                                                    04-01-29
COMMAND: _________                    NPPS                            14:43:49
NAO1441                    YTD DEDUCTIONS - YTDDED1       8 OF 8
     ---------------------------------------------------------------------------
      SSN       PAYBLK   FUNC            LAST NAME                FIRST NAME    I
  YTD FTAX EX FSA DC                    YTD CTAX EX FSA DC
    YTD FTAX EX FSA DC ADJ                YTD CTAX EX FSA DC ADJ
  QTD FTAX EX FSA DC                    MTD CTAX EX FSA DC
    QTD FTAX EX FSA DC ADJ                MTD CTAX EX FSA DC ADJ
  YTD STAX EX FSA DC                    QTD CTAX EX FSA DC
    YTD STAX EX FSA DC ADJ                QTD CTAX EX FSA DC ADJ
  MTD STAX EX FSA DC
    MTD STAX EX FSA DC ADJ
  QTD STAX EX FSA DC
    QTD STAX EX FSA DC ADJ
---------------------------------------------------------------------------
FUNCTIONS:     A= ADD CHN   C= CHANGE     N= NAME SEARCH   R= RETRIEVE
 PF1= HELP          PF3= PREV SCREEN   PF5= MAIN MENU        PF6= QYTDADJ
 PF7= BACKWARD      PF8= FORWARD       PF12= END
```

YTD Deductions 8 (YTDDED1)

DESCRIPTION AND EXECUTION

The YTD Deductions (YTDDED1) template is used to change an employee's YTD, QTD, and cumulative deductions' information.

Steps to Reach YTD Deductions

1. At the Main Menu, select **2** - Payroll.
2. At the Payroll Main Menu, select **2** - MER.
3. At the Master Employee Record Data Entry Menu, select **1** - Master Selection MER Menu.
4. At the Master Selection MER Menu, select **40** - YTD Deductions.

This template is composed of ~~four~~eight screens. You may move forward by pressing **PF8** and backward by pressing **PF7**.

4.2.2.2.26 Retirement Adjustments

```
COMMAND: ________                    NPPS
NAO1443               RETIREMENT ADJUSTMENTS - RETIRADJ    1 OF 3
--------------------------------------------------------------------------------
     SSN      PAYBLK   FUNC            LAST NAME               FIRST NAME    I
 ___ __ ____            _             ______________________  ____________  _
CSRS PRIOR                 CSRS TRAN IN              CSRS YTD
  PRIOR ADJ   ____________   TR IN ADJ  ____________   YTD ADJ     ____________
CSRS TRAN OUT              CSRS CUM
  TR OUT ADJ  ____________   CUM ADJ    ____________
OFFSET YTD FULL                          OFFSET YTD REDU
   OFFSET YTD FULL ADJ     ____________     OFFSET YTD REDU ADJ     __
   CSRS MD PR                 CSRS M TR IN              CSRS MIL YTD
  MD ADJ      ____________   TR IN ADJ  ____________   MIL YTD ADJ ____________
CSRS M TR OUT              CSRS MD CUM
  TR OUT ADJ  ____________   MD CUM ADJ ____________

--------------------------------------------------------------------------------
FUNCTIONS:  A= ADD CHN   C= CHANGE   N= NAME SEARCH   R= RETRIEVE   S= SUSPEND
 PF1= HELP          PF3= PREV SCREEN   PF5= MAIN MENU        PF6= QYTDADJ
 PF7= BACKWARD      PF8= FORWARD       PF12= END
```

Retirement Adjustments - RETIRADJ (Page 1)

```
COMMAND: ________                    NPPS                                09:48:25
NAO1443               RETIREMENT ADJUSTMENTS - RETIRADJ    2 OF 3
      ---------------------------------------------------------------------------
     SSN      PAYBLK   FUNC            LAST NAME                FIRST NAME    I
 ___ __ ____            _             ______________________  ____________  _
RETIRE CODE
CSRS GOVT
  GOVT ADJ    ____________
CSRS MD INTC
  INTCM ADJ   ____________
CSRS MD INT
  INT ADJ     ____________
CIV SR CRD PR              CIV SR TR IN              CIV SER YTD
  CRD PR ADJ  ____________   TR IN ADJ  ____________   YTD ADJ    ____________
CIV SR TR OUT              CIV SR C CUM
  TR OUT ADJ  ____________   CD CUM ADJ ____________ RETIRE CODE

--------------------------------------------------------------------------------
FUNCTIONS:  A= ADD CHN   C= CHANGE   N= NAME SEARCH   R= RETRIEVE   S= SUSPEND
 PF1= HELP          PF3= PREV SCREEN   PF5= MAIN MENU        PF6= QYTDADJ
 PF7= BACKWARD      PF8= FORWARD       PF12= END
```

Retirement Adjustments - RETIRADJ (Page 2)

```
COMMAND: ________                    NPPS
NAO1443               RETIREMENT ADJUSTMENTS - RETIRADJ    3 OF 3
--------------------------------------------------------------------------------
     SSN      PAYBLK   FUNC            LAST NAME                FIRST NAME    I
 ___ __ ____            R             _______________________  _____________  _
RETIRE CODE           ADJUST RETIRE CODE  _
FERS PRIOR                 FERS TRAN IN              FERS CODE K   _____________
  PRIOR ADJ   _____________  TR IN ADJ  _____________ FERS CODE L   _____________
FERS TRAN OUT              FERS CUM                  FERS CODE M   _____________
  TR OUT ADJ  _____________  CUM ADJ    _____________ FERS CODE N   _____________
FERS MD PR                 FERS M TR IN
  MD ADJ      _____________  TR IN ADJ  _____________ FERS YTD
FERS M TR OUT              FERS MD CUM                 YTD ADJ     _____________
  TR OUT ADJ  _____________  MD CUM ADJ _____________ FERS MIL YTD
FERS GOVT                  FERS MD INT                 MIL YTD ADJ _____________
  GOVT ADJ    _____________  INT ADJ    _____________ FERS MD INTC
                                                       INTC ADJ    _____________
--------------------------------------------------------------------------------
FUNCTIONS:  A= ADD CHN   C= CHANGE   N= NAME SEARCH   R= RETRIEVE   S= SUSPEND
 PF1= HELP          PF3= PREV SCREEN   PF5= MAIN MENU        PF6= QYTDADJ
 PF7= BACKWARD      PF8= FORWARD       PF12= END
```

Retirement Adjustments - RETIRADJ (Page 3)

DESCRIPTION AND EXECUTION

The Retirement Adjustments (RETIRADJ) template is used to adjust employee retirement accumulations.

Steps to Reach Retirement Adjustments

1. At the Main Menu, select **2** - Payroll.
2. At the Payroll Main Menu, select **2** - MER.
3. At the Master Employee Record Data Entry Menu, select **1** - Master Selection MER Menu.
4. At the Master Selection MER Menu, select **41** - YTD Retirement Adjustments.

This template is composed of three screens. You may move forward by pressing **PF8** and backward by pressing **PF7**.

The breakdown of the FERS retirement plan codes is provided for year-end reporting purposes for those cases when contributions to more than one FERS plan have been made in the same year. These fields may be updated directly, or they will be updated as a result of entering adjustments to the FERS YTD/CUM fields in correspondence with the ADJUST RETIRE CODE value. The breakdown accumulators are updated each pay period along with the FERS YTD and CUM accumulators.

4.2.2.2.27 YTD Deductions TSP

```
    COMMAND: ________                    NPPS
NAO1442      YTD DEDUCTIONS, THRIFT SAVINGS PLAN - YTDTSP    1 OF 2
--------------------------------------------------------------------------------

     SSN      PAYBLK   FUNC            LAST NAME               FIRST NAME    I
 ___ __ ____            _             ______________________  ____________  _

 EMPLOYEE                GOVT. BASIC                GOVT. MATCHING
 YTD DED                 YTD AMT                    YTD AMT
     ADJ  _____________      ADJ  _____________         ADJ  _____________

 TOTAL YTD                 TOTAL YTD                  TOTAL YTD
----------------------
 EMPLOYEE CATCH-UP
 YTD DED
     ADJ  _____________

 TOTAL YTD CATCH-UP
--------------------------------------------------------------------------------
FUNCTIONS:  A= ADD CHN   C= CHANGE   N= NAME SEARCH   R= RETRIEVE   S= SUSPEND
 PF1= HELP          PF3= PREV SCREEN    PF5= MAIN MENU      PF6= QYTDADJ
 PF7= BACKWARD      PF8= FORWARD        PF12= END
```

YTD Deductions, Thrift Savings Plan - YTDTSP (Page 1)

```
COMMAND: ________                    NPPS
NAO1442      YTD DEDUCTIONS, THRIFT SAVINGS PLAN - YTDTSP    2 OF 2
--------------------------------------------------------------------------------

     SSN      PAYBLK   FUNC            LAST NAME               FIRST NAME    I


CY DED MTD                CITY DED QTD               ST DED YTD
  MTD ADJ     _____________   QTD ADJ     _____________   YTD ADJ    _____________
CY DED QTD                CNTY DED YTD               ST DED MTD
  QTD ADJ     _____________   YTD ADJ     _____________   MTD ADJ    _____________
CITY DED YTD              CNTY DED MTD               ST DED QTD
  YTD ADJ     _____________   MTD ADJ     _____________   QTD ADJ    _____________
CITY DED MTD              CNTY DED QTD
  MTD ADJ     _____________   QTD ADJ     _____________


--------------------------------------------------------------------------------
FUNCTIONS:  A= ADD CHN   C= CHANGE   N= NAME SEARCH   R= RETRIEVE   S= SUSPEND
 PF1= HELP          PF3= PREV SCREEN     PF5= MAIN MENU     PF6= QYTDADJ
 PF7= BACKWARD      PF8= FORWARD         PF12= END
```

YTD Deductions, Thrift Savings Plan - YTDTSP (Page 2)

DESCRIPTION AND EXECUTION

The YTD Deductions, Thrift Savings Plan (YTDTSP) template is used to establish and change an employee's YTD and cumulative TSP deductions information.

Steps to Reach YTD Deductions TSP

1. At the Main Menu, select **2** - Payroll.
2. At the Payroll Main Menu, select **2** - MER.
3. At the Master Employee Record Data Entry Menu, select **1** - Master Selection MER Menu.
4. At the Master Selection MER Menu, select **42** - YTD Deductions TSP.

This template is composed of three screens. You may move forward by pressing **PF8** and backward by pressing **PF7**.

4.2.2.2.28 Appointment Limitations

```
COMMAND: ________                    NPPS
NAO1450              APPOINTMENT LIMITATIONS - LIMIT
--------------------------------------------------------------------------------
     SSN      PAYBLK     FUNC        LAST NAME                FIRST NAME    I
 ___ __ ____            _          ______________________  ____________  _
              APPOINTMENT
                 LIMIT               CUM USED             BALANCE
              -----------            --------             -------
 DAYS:                              ____________
 DOLLARS:                           ____________
 HOURS:                             ____________
 DATE:

  BIWEEKLY SEVERANCE PAY:

     POSITION CODE:                                   TENURE CODE:
     PAY PLAN:                                        WORK SCHEDULE:
--------------------------------------------------------------------------------
FUNCTIONS:  A= ADD CHN   C= CHANGE   N= NAME SEARCH   R= RETRIEVE   S= SUSPEND
 PF1= HELP          PF3= PREV SCREEN         PF5= MAIN MENU         PF12= END
```

Appointment Limitations (LIMIT)

DESCRIPTION AND EXECUTION

The Appointment Limitations (LIMIT) template is used to update an employee's accumulation of hours, dollars, or days during a limited appointment.

<u>Steps to Reach Appointment Limitations</u>

1. At the Main Menu, select **2** - Payroll.
2. At the Payroll Main Menu, select **2** - MER.
3. At the Master Employee Record Data Entry Menu, select **1** - Master Selection MER Menu.
4. At the Master Selection MER Menu, select **43** - Appointment Limitations.

4.2.2.2.29 Transfer In Data

```
COMMAND: ________                    NPPS
 NAO1444                  TRANSFER IN DATA - TRANSIN
 ---------------------------------------------------------------------------

      SSN      PAYBLK   FUNC           LAST NAME                FIRST NAME    I
 ___ __ ____             _            ______________________  ____________  _

  BASE EARNINGS: TRANS IN  ___________     TSP CATCH-UP: TRANS IN

  FICA EARNINGS: TRANS IN  ___________     FSA HC:  TRANSIN  ____________

  FICA DED: TRANS IN       ___________     FSA DC:  TRANSIN       ____________

  TSP DED: TRANS IN        ____________

  LOCAL PAY: TRANS IN      ____________

---------------------------------------------------------------------------
FUNCTIONS:   C= CHANGE      N= NAME SEARCH       R= RETRIEVE       S= SUSPEND
 PF1= HELP                  PF3= PREV SCREEN                    PF5= MAIN MENU
 PF6= QYTDADJ               PF12= END
```

Transfer in Data - TRANSIN

DESCRIPTION AND EXECUTION

The Transfer In Data (TRANSIN) template is used to establish and change an employee's prior employment base earnings, FICA earnings and deductions, TSP deductions, ~~and~~ local pay, and FSA HC/DC.

<u>Steps to Reach Transfer in Data</u>

1. At the Main Menu, select **2** - Payroll.
2. At the Payroll Main Menu, select **2** - MER.
3. At the Master Employee Record Data Entry Menu, select **1** – Master Selection MER Menu.
4. At the Master Selection MER Menu, select **44** –Transfer In Data.

4.2.2.3 Control Actions

NPPS provides various types of processing control actions: normals control, gross-to-net pay control, YTD control, allotments. In addition, NPPS provides the ability to display information about a single employee or group of employees.

Normals Control - Computes normal pay control for an individual employee, a single payblock, or the entire center. Each old vs. new normals control consists of an old normal amount from the previous pay period, a new normal amount computed automatically from any current pay period action affecting normal pay control elements, and a computed difference between the two. NPPS globally computes all old vs. new normals to provide a new baseline for the normal pay control.

In addition, a tour of duty normals is computed for part-time employees and only current normals are computed.

Payroll Register Control - Computes gross to net pay balancing control elements and maintains these control elements for an individual employee, a single payblock, and the entire center.

Pay Period YTD Adjustments - Calculates the YTD control elements from earnings and adjustments accumulations maintenance actions by computing the difference between the previous accumulations value and the new accumulations value.

Savings Allotment Summary - Computes allotment control total dollars for changes to voluntary allotments and TSP loan repayment allotments at the center level for changes made during the pay period.

Bonds Control - Summarizes bond enrollments and pay period bond processing.

Awards Control - Queries deduction amounts withheld from cash awards during the current pay period for a given employee.

Queries - Displays information about a single employee or group of employees. For example, you may display personnel information about a single employee, or list a group of new employees or terminated employees. The following queries are provided.

- Personnel Data
- New Employee List
- Terminated Employee List
- Pay Period History Query
- Pay Period History

4.2.2.3.1 Old Versus New Normals

```
* SPECIFY PAYBLOCK, SSN, OR PF9 - 'NAME SEARCH'


COMMAND: ________                    NPPS
NAO1520                    OLD VERSUS NEW NORMALS - QNORM    1 OF 3
--------------------------------------------------------------------------------
PAY BLOCK: __ OR SSN: ___ __ ____ NAME: ______________________ ____________ _

                                        OLD              NEW         DIFFERENCE
 GROSS PAY
   SUPER DIFF
   FOREIGN DIFF
   RETENTION ALLOW
   STAFF DIFF
  *AUO
   PCA
   LOCAL PAY
 CSRS
 FICA
 HEALTH INSURANCE TAX
 FEDERAL WITHOLDING TAX

--------------------------------------------------------------------------------
 PF1= HELP          PF3= PREV SCREEN        PF5= MAIN MENU        PF7= BACKWARD
 PF8= FORWARD       PF9= NAME SEARCH        PF12= END
```

Old Versus New Normals - QNORM (Page 1)

```
COMMAND: ________                    NPPS
NAO1520                    OLD VERSUS NEW NORMALS - QNORM    2 OF 3
--------------------------------------------------------------------------------
PAY BLOCK: __ OR SSN: ___ __ ____ NAME: ______________________ ____________ _

                                        OLD              NEW         DIFFERENCE
 STATE WITHHOLDING TAX
 CITY WITHHOLDING TAX
 CIVILIAN SERVICE CREDIT
 COUNTY WITHHOLDING TAX
 FEGLI
 FEHB
 BOND DEDUCTION
 CFC
 UNION DUES
 VOLUNTARY SAVINGS ALLOT
 NEBA
 FERS
--------------------------------------------------------------------------------
 PF1= HELP          PF3= PREV SCREEN        PF5= MAIN MENU        PF7= BACKWARD
 PF8= FORWARD       PF9= NAME SEARCH        PF12= END
```

Old Versus New Normals - QNORM (Page 2)

```
COMMAND: ________                    NPPS
 NAO1520                    OLD VERSUS NEW NORMALS - QNORM    3 OF 3
 ------------------------------------------------------------------------------
 PAY BLOCK: __ OR SSN: ___ __ ____ NAME: ______________________ ____________ _

                                          OLD              NEW         DIFFERENCE
  ADVANCE PAY DED
  CSRS MILITARY DEPOSIT
  FERS MILITARY DEPOSIT
  TSP DEDUCTION
  TSP CATCH-UP
  TSP LOAN REPAYMENT ALLOT
  INDEBTEDNESS DUE U.S.
  BANKRUPTCY
  CHILD SUPPORT
  COMMERCIAL GARNISHMENTS
  COST OF LIVING ALLOWANCE
  FSA HC
  FSA DC
  NET PAY
 ------------------------------------------------------------------------------
  PF1= HELP          PF3= PREV SCREEN        PF5= MAIN MENU        PF7= BACKWARD
  PF8= FORWARD       PF9= NAME SEARCH        PF12= END
```

Old Versus New Normals - QNORM (Page 3)

DESCRIPTION AND EXECUTION

The Old Versus New Normals (QNORM) template is used to retrieve and display the old versus new normals pay. The normals are checked against the manual control maintained in the Payroll Office to make sure all pay changes were input. This information may be requested for an individual employee, single payblock, or the entire center.

Steps to Reach Old Versus New Normals

1. At the Main Menu, select **2** - Payroll.
2. At the Payroll Main Menu, select **2** - Master Employee Record (MER).
3. At the Master Employee Record Data Entry Menu, select **1** - Master Selection MER Menu.
4. At the Master Selection MER Menu, select **46** - Old Versus New Normals.

This template is composed of three screens. You may move forward by pressing **PF8** and backward by pressing **PF7**.

DESCRIPTION OF DATA PROCESSING AND OUTPUT

To view the normals for an individual, enter the individual's payblock and SSN in the fields provided at the top of the page and press **ENTER**. To view the normals for a single payblock, enter only the payblock number and press **ENTER**. To view the normals for the entire center, enter the number **99** in the payblock field and press **ENTER**.

* The label AUO will be replaced with AVAIL PAY if the employee is getting availability pay.

4.2.2.3.2 Tour of Duty Normals

```
* SPECIFY SSN

 COMMAND: ________                    NPPS
 NAO1587                 TOUR OF DUTY NORMALS - QPAY       1 OF 3
 ------------------------------------------------------------------------------
 SSN: ___ __ ____     PAY BLOCK:

                                   CURRENT NORMALS
  PART TIME HOURS
  GROSS PAY
    SUPER DIFF
    FOREIGN DIFF
    RETENTION ALLOW
    STAFF DIFF
    AUO
    PCA
    LOCAL PAY
  CSRS
  FICA
  HEALTH INSURANCE TAX
  FEDERAL WITHOLDING TAX
  ------------------------------------------------------------------------------
  PF1= HELP          PF3= PREV SCREEN       PF5= MAIN MENU         PF7= BACKWARD
  PF8= FORWARD       PF12= END
```

Tour of Duty Normals - QPAY (Page 1)

```
COMMAND: ________                    NPPS
 NAO1587                 TOUR OF DUTY NORMALS - QPAY       2 OF 3
 ------------------------------------------------------------------------------
 SSN: ___ __ ____     PAY BLOCK:

                                   CURRENT NORMALS
  STATE WITHHOLDING TAX
  CITY WITHHOLDING TAX
  CIVILIAN SERVICE CREDIT
  COUNTY WITHHOLDING TAX
  FEGLI
  FEHB
  BOND DEDUCTION
  CFC
  UNION DUES
  VOLUNTARY SAVINGS ALLOT
  NEBA
  FERS
  CSRS MILITARY DEPOSIT
 ------------------------------------------------------------------------------
  PF1= HELP          PF3= PREV SCREEN       PF5= MAIN MENU         PF7= BACKWARD
  PF8= FORWARD       PF12= END
```

Tour of Duty Normals - QPAY (Page 2)

```
COMMAND: ________                    NPPS
 NAO1587                 TOUR OF DUTY NORMALS - QPAY       3 OF 3
 ------------------------------------------------------------------------------
 SSN: ___ __ ____     PAY BLOCK:

                                   CURRENT NORMALS
  FERS MILITARY DEPOSIT
  TSP DEDUCTION
  TSP CATCH-UP
  TSP LOAN REPAYMENT ALLOT
  INDEBTEDNESS DUE U.S.
  BANKRUPTCY
  CHILD SUPPORT
  COMMERCIAL GARNISHMENTS
  COST OF LIVING ALLOWANCE
  ADVANCE PAY DED
  FSA HC
  FSA DC
  NET PAY




 ------------------------------------------------------------------------------
  PF1= HELP          PF3= PREV SCREEN       PF5= MAIN MENU         PF7= BACKWARD
  PF8= FORWARD       PF12= END
```

Tour of Duty Normals - QPAY (Page 3)

DESCRIPTION AND EXECUTION

The Tour of Duty Normals (QPAY) template is used to retrieve and display the normal pay fields for a part-time employee. The employee's normals will be computed based on part-time hours.

<u>Steps to Reach Tour of Duty Normals</u>

1. At the Main Menu, select **2** - Payroll.
2. At the Payroll Main Menu, select **2** - MER.
3. At the Master Employee Record Data Entry Menu, select **1** - Master Selection MER Menu.
4. At the Master Selection MER Menu, select **54** - Tour of Duty Normals.

This template is composed of three screens. You may move forward by pressing **PF8** and backward by pressing **PF7**.

4.2.2.3.3 Awards Control

```
COMMAND: ________                    NPPS
NAO1585                   INDIVIDUAL AWARDS - QAWARD
--------------------------------------------------------------------------------

     SSN     PAYBLK  FUNCT  PAY DATE   LAST NAME                FIRST NAME    I
 ___ __ ____          _                _______________________  ____________  _


 NOAC   GROSS     FED       OASDI   HIT      STATE   CITY    COUNTY   NET AWD




 TOTAL


--------------------------------------------------------------------------------
FUNCTIONS:  N= NAME SEARCH         R= RETRIEVE
 PF1= HELP         PF3= PREV SCREEN         PF5= MAIN MENU         PF12= END
```

Awards Control (QAWARD)

DESCRIPTION AND EXECUTION

The Awards Control (QAWARD) template is used to retrieve and display the award fields for an individual employee.

Steps to Reach Awards Control

1. At the Main Menu, select **2** - Payroll.
2. At the Payroll Main Menu, select **2** - MER.
3. At the Master Employee Record Data Entry Menu, select **1** - Master Selection MER Menu.
4. At the Master Selection MER Menu, select **53** - Awards Control.

4.2.2.3.4 Pay Period YTD Adjustments

```
COMMAND: ________                    NPPS
NAO1530                 PAY PERIOD YTD ADJUSTMENTS - QYTDADJ  1  OF 17
--------------------------------------------------------------------------------
PAY BLOCK:  __
                                OLD TOTAL       NEW TOTAL       DIFFERENCE
 EARNINGS:
    AWD
    AVAILABILITY PAY
    AWARD NET
    BASE
    BASE TRANS IN
    BOND REFUND
    CASH AWARDS
    CITY GROSS
    CITY GRS MTD
    CITY GRS QTD
    COLA
    COLA QTD
--------------------------------------------------------------------------------
 PF1= HELP          PF3= PREV SCREEN       PF5= MAIN MENU        PF7= BACKWARD
 PF8= FORWARD       PF12= END
```

Pay Period YTD Adjustments - QYTDADJ (Page 1)

```
COMMAND: ________                    NPPS
NAO1530                 PAY PERIOD YTD ADJUSTMENTS - QYTDADJ  2  OF 17
--------------------------------------------------------------------------------
PAY BLOCK:  __
                                OLD TOTAL       NEW TOTAL       DIFFERENCE
 EARNINGS:
    CNTY GROSS
    CNTY GRS MTD
    CNTY GRS QTD
    EIC
    FERS
    FICA
    FICA QTD
    FICA TRANS IN
    FIRE FIGHTERS
    FOREIGN DIFF
    GROSS
    HAZARDOUS
--------------------------------------------------------------------------------
 PF1= HELP          PF3= PREV SCREEN       PF5= MAIN MENU        PF7= BACKWARD
 PF8= FORWARD       PF12= END
```

Pay Period YTD Adjustments - QYTDADJ (Page 2)

```
COMMAND: ________                    NPPS
NAO1530                PAY PERIOD YTD ADJUSTMENTS - QYTDADJ  3  OF 17
-------------------------------------------------------------------------------
PAY BLOCK:  __
                                OLD TOTAL       NEW TOTAL       DIFFERENCE
 EARNINGS:
    HIT
    HIT QTD
    LOCAL PAY
    LOCAL PAY TRANS IN
    LUMP SUM LV
    NET
    NIGHT DIFF
    OVERTIME
    PCA
    PCS NOT SUBJ CITY TAX
    PCS CITY TAX
    PCS CITY MTD
-------------------------------------------------------------------------------
 PF1= HELP          PF3= PREV SCREEN       PF5= MAIN MENU        PF7= BACKWARD
 PF8= FORWARD       PF12= END
```

Pay Period YTD Adjustments - QYTDADJ (Page 3)

```
COMMAND: ________                    NPPS
NAO1530                PAY PERIOD YTD ADJUSTMENTS - QYTDADJ  4  OF 17
-------------------------------------------------------------------------------
PAY BLOCK:  __
                                OLD TOTAL       NEW TOTAL       DIFFERENCE
 EARNINGS:
    PCS CITY QTD
    PCS NOT SUB CNTY TAX
    PCS CNTY TAX
    PCS CNTY MTD
    PCS CNTY QTD
    PCS FICA
    PCS FICA QTD
    PCS HIT
    PCS HIT QTD
    PCS NOT SUBJ STATE TAX
    PCS STATE TAX
    PCS STATE MTD
-------------------------------------------------------------------------------
 PF1= HELP          PF3= PREV SCREEN       PF5= MAIN MENU        PF7= BACKWARD
 PF8= FORWARD       PF12= END
```

Pay Period YTD Adjustments - QYTDADJ (Page 4)

```
COMMAND: ________                    NPPS
NAO1530                 PAY PERIOD YTD ADJUSTMENTS - QYTDADJ  5  OF 17
--------------------------------------------------------------------------------
PAY BLOCK:  __
                                OLD TOTAL       NEW TOTAL       DIFFERENCE
 EARNINGS:
    PCS STATE QTD
    PCS NOT SUBJ FED TAX
    PCS FED TAX
    PCS FED TAX QTD
    RETENTION ALLOW
    STAFF DIFF
    STATE GROSS
    STATE GRS MTD
    STATE GRS QTD
    STAT CUT
    SUNDAY DIFF
    SUPER DIFF
--------------------------------------------------------------------------------
 PF1= HELP          PF3= PREV SCREEN       PF5= MAIN MENU        PF7= BACKWARD
 PF8= FORWARD       PF12= END
```

Pay Period YTD Adjustments - QYTDADJ (Page 5)

```
COMMAND: ________                    NPPS
NAO1530                 PAY PERIOD YTD ADJUSTMENTS - QYTDADJ  6  OF 17
--------------------------------------------------------------------------------
PAY BLOCK:  __
                                OLD TOTAL       NEW TOTAL       DIFFERENCE
 EARNINGS:
    TAXABLE
    TAXABLE MTD
    TAXABLE QTD
    TAXABLE CITY
    TAXABLE CITY MTD
    TAXABLE CITY QTD
    TAXABLE CNTY
    TAXABLE CNTY MTD
    TAXABLE CNTY QTD
    TAXABLE STATE
    TAXABLE STATE MTD
    TAXABLE STATE QTD
--------------------------------------------------------------------------------
 PF1= HELP          PF3= PREV SCREEN       PF5= MAIN MENU        PF7= BACKWARD
 PF8= FORWARD       PF12= END
```

Pay Period YTD Adjustments - QYTDADJ (Page 6)

```
COMMAND: ________                    NPPS
NAO1530                 PAY PERIOD YTD ADJUSTMENTS - QYTDADJ  7  OF 17
--------------------------------------------------------------------------------
PAY BLOCK:  __
                                OLD TOTAL       NEW TOTAL       DIFFERENCE
 TSP DEDUCTIONS:
    CY DED
    GOVT BASIC AMT DIST
    GOVT MATCH AMT DIST









--------------------------------------------------------------------------------
 PF1= HELP          PF3= PREV SCREEN       PF5= MAIN MENU        PF7= BACKWARD
 PF8= FORWARD       PF12= END
```

Pay Period YTD Adjustments - QYTDADJ (Page 7)

```
COMMAND: ________                    NPPS
NAO1530                 PAY PERIOD YTD ADJUSTMENTS - QYTDADJ  8  OF 17
--------------------------------------------------------------------------------
PAY BLOCK:  __
                                OLD TOTAL       NEW TOTAL       DIFFERENCE
 TSP DEDUCTIONS:
    TSP STATE DED YTD
    TSP STATE DED MTD
    TSP STATE DED QTD
    TSP CNTY DED YTD
    TSP CNTY DED MTD
    TSP CNTY DED QTD
    TSP CITY DED YTD
    TSP CITY DED MTD
    TSP CITY DED QTD
    TSP TRNS IN


--------------------------------------------------------------------------------
 PF1= HELP          PF3= PREV SCREEN       PF5= MAIN MENU        PF7= BACKWARD
 PF8= FORWARD       PF12= END
```

Pay Period YTD Adjustments - QYTDADJ (Page 8)

```
COMMAND: ________                    NPPS
NAO1530                 PAY PERIOD YTD ADJUSTMENTS - QYTDADJ  9  OF 17
--------------------------------------------------------------------------------
PAY BLOCK:  __
                                OLD TOTAL       NEW TOTAL       DIFFERENCE
 DEDUCTIONS:
    ADV PAY CUM
    ADV PAY YTD
    BANKRUPTCY
    BANKRUPTCY CUM
    BILL OF COLL
    BOND
    CFC
    CHILD SUP
    CHILD SUP CUM
    COM GARNISH
    COM GARNISH CUM
    CITY TAX
--------------------------------------------------------------------------------
 PF1= HELP          PF3= PREV SCREEN       PF5= MAIN MENU        PF7= BACKWARD
 PF8= FORWARD       PF12= END
```

Pay Period YTD Adjustments - QYTDADJ (Page 9)

```
COMMAND: ________                    NPPS
NAO1530                 PAY PERIOD YTD ADJUSTMENTS - QYTDADJ  10 OF 17
--------------------------------------------------------------------------------
PAY BLOCK:  __
                                OLD TOTAL       NEW TOTAL       DIFFERENCE
 DEDUCTIONS:
    CITY TAX MTD
    CITY TAX QTD
    CIV SVS CR PR
    CIV SVS CR
    CIV SVS CUM
    CIV SVS TRSF
    CIV SVS TRSF OUT
    CNTY TAX
    CNTY TAX MTD
    CNTY TAX QTD
    CSRS PRIOR
    CSRS
--------------------------------------------------------------------------------
 PF1= HELP          PF3= PREV SCREEN       PF5= MAIN MENU        PF7= BACKWARD
 PF8= FORWARD       PF12= END
```

Pay Period YTD Adjustments - QYTDADJ (Page 10)

```
COMMAND: ________                    NPPS
NAO1530                 PAY PERIOD YTD ADJUSTMENTS - QYTDADJ  11 OF 17
-------------------------------------------------------------------------------
PAY BLOCK:  __
                                OLD TOTAL       NEW TOTAL       DIFFERENCE
 DEDUCTIONS:
    CSRS CUM TRANSFER
    CSRS GOVT
    CSRS TRNS OUT
    CSRS NASA CUM
    CSRS MIL DEP PRIOR
    CSRS MIL DEP
    CSRS MIL DEP CUM
    CSRS MIL DEP INT
    CSRS MIL DEP INT CUM
    CSRS MIL DEP TRANSFER
    CSRS MIL TR OUT
    FED TAX
-------------------------------------------------------------------------------
 PF1= HELP          PF3= PREV SCREEN       PF5= MAIN MENU        PF7= BACKWARD
 PF8= FORWARD       PF12= END
```

Pay Period YTD Adjustments - QYTDADJ (Page 11)

```
COMMAND: ________                    NPPS
NAO1530                 PAY PERIOD YTD ADJUSTMENTS - QYTDADJ  12 OF 17
-------------------------------------------------------------------------------
PAY BLOCK:  __
                                OLD TOTAL       NEW TOTAL       DIFFERENCE
 DEDUCTIONS:
    FED TAX QTD
    FEGLI TOTAL
    FEGLI GOVT
    FEHB
    FEHB GOVT
    FERS PRIOR
    FERS - K FUND
    FERS - L FUND
    FERS - M FUND
    FERS - N FUND
    FERS TRNS IN
    FERS TRNS OUT
-------------------------------------------------------------------------------
 PF1= HELP          PF3= PREV SCREEN       PF5= MAIN MENU        PF7= BACKWARD
 PF8= FORWARD       PF12= END
```

Pay Period YTD Adjustments - QYTDADJ (Page 12)

```
COMMAND: ________                    NPPS
NAO1530                 PAY PERIOD YTD ADJUSTMENTS - QYTDADJ  13 OF 17
-------------------------------------------------------------------------------
PAY BLOCK:  __
                                OLD TOTAL       NEW TOTAL       DIFFERENCE
 DEDUCTIONS:
    FERS GOVT CONT - K FUND
    FERS GOVT CONT - L FUND
    FERS GOVT CONT - M FUND
    FERS GOVT CONT - N FUND
    FERS MIL DEP PR
    FERS MIL DEP
    FERS MIL DEP CUM
    FERS MIL DEP INT
    FERS MIL DEP INT CUM
    FERS MIL DEP TRANSFER
    FERS MIL TR OUT
    FERS NASA CUM
-------------------------------------------------------------------------------
 PF1= HELP          PF3= PREV SCREEN       PF5= MAIN MENU        PF7= BACKWARD
 PF8= FORWARD       PF12= END
```

Pay Period YTD Adjustments - QYTDADJ (Page 13)

```
COMMAND: ________                    NPPS
NAO1530                 PAY PERIOD YTD ADJUSTMENTS - QYTDADJ  14 OF 17
-------------------------------------------------------------------------------
PAY BLOCK:  __
                                OLD TOTAL       NEW TOTAL       DIFFERENCE
 DEDUCTIONS:
    FICA
    FICA QTD
    FICA GOVT
    FICA GOVT QTD
    FICA TRNS IN
    HIT
    HIT QTD
    HIT GOVT
    HIT GOVT QTD
    INDEBT
    INDEBT CUM
    MISC
-------------------------------------------------------------------------------
 PF1= HELP          PF3= PREV SCREEN       PF5= MAIN MENU        PF7= BACKWARD
 PF8= FORWARD       PF12= END
```

Pay Period YTD Adjustments - QYTDADJ (Page 14)

```
 COMMAND: ________                    NPPS
NAO1530                PAY PERIOD YTD ADJUSTMENTS - QYTDADJ  15 OF 17
--------------------------------------------------------------------------------
PAY BLOCK:  __
                                OLD TOTAL       NEW TOTAL       DIFFERENCE
 DEDUCTIONS:
    NEBA BASIC
    NEBA OPTIONAL
    NEBA SPOUSE
    NEBA TOTAL
    NEBA BASIC QTD
    NEBA OPT QTD
    NEBA SPOUSE QTD
    NEBA QTD TOT
    NEBA TRAVEL
    NEBA TRAVEL QTD


--------------------------------------------------------------------------------
 PF1= HELP          PF3= PREV SCREEN       PF5= MAIN MENU        PF7= BACKWARD
 PF8= FORWARD       PF12= END
```

Pay Period YTD Adjustments - QYTDADJ (Page 15)

```
COMMAND: ________                    NPPS
NAO1530                PAY PERIOD YTD ADJUSTMENTS - QYTDADJ  16 OF 17
--------------------------------------------------------------------------------
PAY BLOCK:  __
                                OLD TOTAL       NEW TOTAL       DIFFERENCE
 DEDUCTIONS:
    PCS CITY TAX
    PCS CITY MTD
    PCS CITY QTD
    PCS CNTY TAX
    PCS CNTY MTD
    PCS CNTY QTD
    PCS FICA
    PCS FICA QTD
    PCS HIT
    PCS HIT QTD
    PCS STATE TAX

--------------------------------------------------------------------------------
 PF1= HELP          PF3= PREV SCREEN       PF5= MAIN MENU        PF7= BACKWARD
 PF8= FORWARD       PF12= END
```

Pay Period YTD Adjustments - QYTDADJ (Page 16)

```
COMMAND: ________                    NPPS
NAO1530                PAY PERIOD YTD ADJUSTMENTS - QYTDADJ  17 OF 17
-------------------------------------------------------------------------------
PAY BLOCK:  __
                                OLD TOTAL       NEW TOTAL       DIFFERENCE
 DEDUCTIONS:
    PCS STATE MTD
    PCS STATE QTD
    PCS FED TAX
    PCS FED TAX QTD
    STATE TAX
    STATE TAX MTD
    STATE TAX QTD
    TSP LOAN DED 1
    TSP LOAN DED 2
    UNION DUES
    VOLUNTARY ALLOT

-------------------------------------------------------------------------------
 PF1= HELP          PF3= PREV SCREEN       PF5= MAIN MENU        PF7= BACKWARD
 PF8= FORWARD       PF12= END
```

Pay Period YTD Adjustments - QYTDADJ (Page 17)

DESCRIPTION AND EXECUTION

The Pay Period YTD Adjustments (QYTDADJ) template is used to retrieve and display the changes in the old versus new totals for the pay period YTD, QTD, and MTD data for control and reconciliation purposes.

Steps to Reach Pay Period YTD Adjustments

1. At the Main Menu, select **2** - Payroll.
2. At the Payroll Main Menu, select **2** - MER.
3. At the Master Employee Record Data Entry Menu, select **1** - Master Selection MER Menu.
4. At the Master Selection MER Menu, select **47** - Pay Period YTD Adjustments.

This template is composed of seventeen screens. You may move forward by pressing PF8 and backward by pressing PF7.

4.2.2.3.5 Payroll Register

```
COMMAND: ________                    NPPS
NAO1550                   PAYROLL REGISTER - QREG       1 OF 3
PAY BLOCK: __ OR SSN: ___ __ ____ NAME: ______________________ ____________ _

   ADD:                       ADD: NET + DED            ADD: NET + DED
 BASIC PAY                  NET EARN                  FEHB
 OVERTIME                   ADV PAY                   FERS
 NITE DIF                   BANKRUPTCY                FERS MIL
 HOL WKD                    BONDS                     FICA
 LUMP SUM                   CFC                       INDEBT US
 UNUS CT PD                 CHILD SUPP                HIT
 SUN DIF                    C GARNISH                 MISC
 HAZARD                     CIV SV CR                 NEBA
 FOREN-DIF                  CITY TAX                  STATE TAX
 SUPER DIFF                 COUNTY TAX                TSP
 RET ALLOW                  CSRS                      TSP CATCH
 STAFF DIFF                 CSRS MIL                  TSP LOAN
*AUO/AVAIL                  FED TAX                   UNION
 PCA                        FEGLI                     VOL ALLOT
 LOCAL PAY                  LTC
                            FSA HC
                            FSA DC                    SUB TOT
-------------------------------------------------------------------------------
 PF1= HELP          PF3= PREV SCREEN     PF5= MAIN MENU       PF7= BACKWARD
 PF8= FORWARD       PF9= NAME SEARCH     PF12= END
```

Payroll Register - QREG (Page 1)

```
                                                                    92-06-09
COMMAND: ________                    NPPS                           13:55:45
NAO1550                   PAYROLL REGISTER - QREG       2 OF 3
PAY BLOCK: __ OR SSN: ___ __ ____ NAME: ______________________ ____________ _

                            ADD: ADJUSTMENTS           LESS: REFUNDS/CREDIT
 BASIC ADJ                  (-)                        (+)
 OT ADJ                     BILL OF CO                BOND REF
 NITE ADJ                   CFC                       CFC
 HOL WKD AD                 CITY TAX                  CITY TAX
 SUN ADJ                    CIV SV CR                 CIV SV CR
 HAZ ADJ                    CNTY TAX                  CNTY TAX
 FIR PR ADJ                 COLA                      COLA
 FOR DF ADJ                 CSRS                      CSRS
 SUP DF ADJ                 EIC                       EIC
 RET AL ADJ                 FED TAX                   FED TAX
 STF DF ADJ                 FEGLI                     FEGLI
*AUO    ADJ                 FEHB                      FEHB
 PCA
 LOCAL  ADJ                 FERS                      FERS
                            FICA                      FICA
-------------------------------------------------------------------------------
 PF1= HELP          PF3= PREV SCREEN     PF5= MAIN MENU       PF7= BACKWARD
 PF8= FORWARD       PF9= NAME SEARCH     PF12= END
```

Payroll Register - QREG (Page 2)

```
COMMAND: ________                    NPPS                                  10:23:51
 NAO1550                     PAYROLL REGISTER - QREG       3 OF 3
 PAY BLOCK: __ OR SSN: ___ __ ____ NAME: ____________________ ___________ _

                                ADD: ADJUSTMENTS           LESS: REFUNDS/CREDIT
                                (-)                        (+)
                             HIT                        HIT
                             ST TAX                     ST TAX
                             TSP ADJ                    TSP ADJ
                             TSPCATCH                 TSPCATCH
                             TSP LOAN                   TSP LOAN
                             UNION DUES                 UNION DUES
                             ADV PAY                    ADV PAY
    SUB TOT                     SUB TOT                    SUB TOT
  LESS:S CUT                                             LESS:
                                                         EIC AMT(+)
                                                         COLA   (+)

    TOT ERN                                                 TOT ERN

 ------------------------------------------------------------------------------
 PF1= HELP          PF3= PREV SCREEN     PF5= MAIN MENU       PF7= BACKWARD
 PF8= FORWARD       PF9= NAME SEARCH     PF12= END
```

Payroll Register - QREG (Page 3)

DESCRIPTION AND EXECUTION

The Payroll Register (QREG) template is used to retrieve and display payroll register summary information for an individual employee, single payblock, the entire center, or the entire agency from base-to-gross pay and net-to-gross pay.

Steps to Reach Payroll Register

1. At the Main Menu, select **2** - Payroll.
2. At the Payroll Main Menu, select **2** - MER.
3. At the Master Employee Record Data Entry Menu, select **1** - Master Selection MER Menu.
4. At the Master Selection MER Menu, select **49** - Payroll Register Adjustments.

This template is composed of three screens. You may move forward by pressing **PF8** and backward by pressing **PF7**.

DESCRIPTION OF DATA PROCESSING AND OUTPUT

To view the payroll totals for an individual, enter the individual's payblock and SSN in the fields provided at the top of the page and press **ENTER**. To view the totals for a single payblock, enter only the payblock number and press **ENTER**. To view the totals for the entire center, enter the number **99** in the payblock field and press **ENTER**.

* The label AUO will be replaced with AVAIL PAY if the employee is getting availability pay.

CPO Center

When Payroll Register screen is accessed using the CPO USER-ID, CPO User can retrieve and display payroll register summary information for an individual employee, single payblock, the Center, or NASA Agency using Pay Block 98.

4.2.2.3.6 Savings Allotment Summary

```
COMMAND: ________                    NPPS
NAO1510              SAVINGS ALLOTMENT SUMMARY - QALLOT
-------------------------------------------------------------------------------
                                CENTER: ____

                 PRIOR-TOTAL:
                 NEW-ACCOUNTS:
                 CHANGE INCREASES:

                 TOTAL INCREASES:

                    SUB-TOTAL:

                 CANCELLATIONS:
                 CHANGE DECREASES:

                 TOTAL DECREASES:

                    OVERALL TOTAL DEDUCTIONS:
-------------------------------------------------------------------------------
 PF1= HELP          PF3= PREV SCREEN       PF5= MAIN MENU        PF12= END
```

Savings Allotment Summary (QALLOT)

DESCRIPTION AND EXECUTION

The Savings Allotment Summary (QALLOT) template is used to retrieve and display a summary report that shows the current pay period changes to the allotment data for the entire center. This includes voluntary savings allotments and TSP loan repayment allotments.

Steps to Reach Savings Allotment Summary

1. At the Main Menu, select **2** - Payroll.
2. At the Payroll Main Menu, select **2** - MER.
3. At the Master Employee Record Data Entry Menu, select **1** - Master Selection MER Menu.
4. At the Master Selection MER Menu, select **44** - Savings Allotment Summary.

4.2.2.3.7 Bonds Control

```
*   SPECIFY PAYBLOCK AND/OR SSN


COMMAND: ________                    NPPS
NAO1540                     BONDS CONTROL - QBOND                            1
-------------------------------------------------------------------------------

                   PAYBLK: __  OR  SSN: ___ __ ____   (99 = CENTER)

                            ***  EMPLOYEE  ***

# OF ACTIVE BONDS:         TOT DED AMOUNT:
# OF ROTATING OWNERS:      TOT DED THIS PP:              BONDS PURCHASED:


                         ***  PAY BLOCK/CENTER  ***

# OF ACTIVE BONDS:         TOT DED AMOUNT:
# OF ROTATING OWNERS:      TOT DED THIS PP:              BONDS PURCHASED:



-------------------------------------------------------------------------------
 PF1= HELP          PF3= PREV SCREEN        PF5= MAIN MENU       PF12= END
```

Bonds Control (QBOND)

DESCRIPTION AND EXECUTION

The Bonds Control (QBOND) template is used to retrieve and display information about active bonds deductions and bonds purchased during this pay period for an individual employee, single payblock, or the entire center.

Steps to Reach Bonds Control

1. At the Main Menu, select **2** - Payroll.
2. At the Payroll Main Menu, select **2** - MER.
3. At the Master Employee Record Data Entry Menu, select **1** - Master Selection MER Menu.
4. At the Master Selection MER Menu, select **47** - Bonds Control.

DESCRIPTION OF DATA PROCESSING AND OUTPUT

To view the bonds totals for an individual, enter the individual's payblock and SSN in the fields provided at the top of the page and press **ENTER**. To view the bonds totals for a single payblock, enter only the payblock number and press **ENTER**. To view the bonds totals for the entire center, enter the number **99** in the payblock field and press **ENTER**.

4.2.2.3.8 Personnel Data

```
*   SPECIFY SSN OR FUNCTION = N 'NAME SEARCH'

COMMAND: ________                    NPPS
NAO1560                       PERSONNEL DATA - PERSON
-------------------------------------------------------------------------------
SSN: ___ __ ____         FUNC: R     NAME:  _________________ ____________ _
  SCD LEAVE DATE:                           NCC SUFFIX:
  INSTALLATION EOD:                         ADJ BASIC PAY:
  BIRTH DATE:                               OT RATE:
  GRADE:         STEP:                      LOCAL  PAY:             AUO:
  FLSA STS:     ORG LOCATED:                STAFF DIFF:           AVAIL:
  ADJ BASIC HOURLY/DAILY:                   SUPER DIFF RATE:
  WORK SCHED CODE:                          RET ALLOW RATE:
  PART TIME HOURS:                          ANN LV CATG:      ACCR RATE:
  AL ACCR AVAIL:                            RESTORED LV BAL:
  SL ACCR AVAIL:                            COMP TIME BAL:
  LWOP WIG:         FEHB CONTR:             CREDIT HRS BAL:
  RETIRE PLAN:      FEHB PLAN:              LWOP YTD:
  FEGLI PLAN:       FACIL CODE:             SCH ADJ BASIC PAY:
  TENURE TYPE:      OCCUP CODE:             ORG ASSIGNED:
  FTE LINE ITEM:    PAY TBL:                PAY PLAN:       POSITION TYPE:
-------------------------------------------------------------------------------
 FUNCTIONS:         N= NAME SEARCH          R= RETRIEVE
 PF1= HELP          PF3= PREV SCREEN        PF5= MAIN MENU         PF12= END
```

Personnel Data (PERSON)

DESCRIPTION AND EXECUTION

The Personnel Data (PERSON) template is used to retrieve and display personnel data (i.e., SF 50 information) regarding an individual employee.

<u>Steps to Reach Personnel Data</u>

1. At the Main Menu, select **2** - Payroll.
2. At the Payroll Main Menu, select **2** - MER.
3. At the Master Employee Record Data Entry Menu, select **1** - Master Selection MER Menu.
4. At the Master Selection MER Menu, select **50** - Personnel Data.

4.2.2.3.9 New Employee List

```
COMMAND: ________                    NPPS                                  15:50:39
NAO1570                  NEW EMPLOYEE LIST - QNEW
-------------------------------------------------------------------------------
ADD CHAIN                                                                   FACIL
SEL              NAME                        EOD DATE       SSN       PB  CODE

 _                                                          -  -
 _                                                          -  -
 _                                                          -  -
 _                                                          -  -
 _                                                          -  -
 _                                                          -  -
 _                                                          -  -
 _                                                          -  -
 _                                                          -  -
 _                                                          -  -
 _                                                          -  -
 _                                                          -  -
-------------------------------------------------------------------------------
 PF1= HELP           PF3= PREV SCREEN        PF5= MAIN MENU      PF7= BACKWARD
 PF8= FORWARD        PF12= END
```

New Employee List (QNEW)

DESCRIPTION AND EXECUTION

The New Employee List (QNEW) template is used to retrieve and display a list of new employees.

Steps to Reach New Employee List

1. At the Main Menu, select **2** - Payroll.
2. At the Payroll Main Menu, select **2** - MER.
3. At the Master Employee Record Data Entry Menu, select **1** - Master Selection MER Menu.
4. At the Master Selection MER Menu, select **51** - New Employee List.

DESCRIPTION OF DATA PROCESSING AND OUTPUT

Using this list, you may select an employee and initiate the add chain (a group of payroll actions linked together so all the necessary information about a new employee may be added at one time). To initiate an add chain for a new employee, select the employee by entering **X** in the blank to the left of the employee's name and pressing **ENTER**. This automatically retrieves the Employee T&A Distribution template, which displays the information entered by personnel, such as service basis and retirement plan. At this template, entry of the additional information necessary to calculate the employee's pay is required. As long as the function remains "A" for add, you will continue through the add chain until it is completed. The system then returns to the New Employee List.

4.2.2.3.10 Terminated Employee List

```
                                                                          91-02-11
COMMAND: ________                  NPPS                                   15:51:36
NAO1580             TERMINATED EMPLOYEE LIST - QTERM
------------------------------------------------------------------------------
PAYBLOCK: __                                  FACILITY   TERMINATION
LUMP SUM            NAME                        CODE    DATE   REASON    SSN
LV SEL
   -                                                                      -  -
   -                                                                      -  -
   -                                                                      -  -
   -                                                                      -  -
   -                                                                      -  -
   -                                                                      -  -
   -                                                                      -  -
   -                                                                      -  -
   -                                                                      -  -
   -                                                                      -  -
   -                                                                      -  -
   -                                                                      -  -
------------------------------------------------------------------------------
 PF1= HELP           PF3= PREV SCREEN        PF5= MAIN MENU      PF7= BACKWARD
 PF8= FORWARD        PF12= END
```

Terminated Employee List (QTERM)

DESCRIPTION AND EXECUTION

The Terminated Employee List (QTERM) template is used to retrieve and display a list of employees terminating in the current pay period (Duty Status = "Z" and Reactivation Indicator = 0) for a single payblock. Using this list, you may select an employee in order to view the lump sum calculations.

Steps to Reach Terminated Employee List

1. At the Main Menu, select **2** - Payroll.
2. At the Payroll Main Menu, select **2** - MER.
3. At the Master Employee Record Data Entry Menu, select **1** - Master Selection MER Menu.
4. At the Master Selection MER Menu, select **52** - Terminated Employee List.

DESCRIPTION OF DATA PROCESSING AND OUTPUT

To view the lump sum calculations for a terminated employee, select the employee by entering **X** in the Lump Sum Leave Selection field located to the left of each individual's name and pressing **ENTER**. You will automatically move to the Lump Sum Leave/Reactivations template.

4.2.2.3.11 Pay Period History Query

```
COMMAND: ________                    NPPS
NAO1590              PAY PERIOD HISTORY QUERY - QHISTPP
-------------------------------------------------------------------------------

 LAST NAME               FIRST NAME
 ______________________  ____________
 (TYPE NAME AND HIT ENTER FOR NAME SEARCH)


         1. SUMMARY, ENTER:    PAY ENDING DATE ________ (MMDDYYYY)
            (QHISTORY)         SSN ___ __ ____


         2. DETAIL,  ENTER:    PAY ENDING DATE ________ (MMDDYYYY)
                               SSN ___ __ ____
                               MER SCREEN ________
                               (COMMAND)


-------------------------------------------------------------------------------
 PF1= HELP          PF3= PREV SCREEN       PF5= MAIN MENU       PF12= END
```

Pay Period History Query (QHISTPP)

DESCRIPTION AND EXECUTION

The Pay Period History Query (QHISTPP) template is used to retrieve and display an employee's historical summary for a specified pay ending date. This template is also used to retrieve and display a detailed employee history via a MER template. The authorized payroll professional may identify a specific MER template by entering the abbreviated name of the template to be retrieved.

<u>Steps to Reach Pay Period History Query</u>

1. At the Main Menu, select **2** - Payroll.
2. At the Payroll Main Menu, select **2** - MER.
3. At the Master Employee Record Data Entry Menu, select **1** - Master Selection MER Menu.
4. At the Master Selection MER Menu, select **55** - Pay Period History Query.

4.2.2.3.12 Pay Period History

```
COMMAND: ________                    NPPS
NAO1591                PAY PERIOD HISTORY1 - QHIST1    1 OF 5
--------------------------------------------------------------------------------
SSN: ___ __ ____  LAST NAME: _____________________ FIRST NM: ____________ I: _
PAY ENDING DATE: ________ (MMDDYYYY)   (TYPE NAME AND HIT ENTER FOR NAME SEARCH)

ADV PAY DED:                CFC:                       COLA:
 ADV PAY ADJ:                CFC ADJ:                   COLA ADJ:
AUO:                        CHILD SUPP:                CSRS:
 AUO ADJ:                   C GARNISH:                  CUR ADJ:
AVAIL PAY:                  CITY TAX:                   FRMR ADJ:
 AVAIL ADJ:                  CTTX ADJ:                 CSRS MIL:
BANKRUPTTCY:                 FRMR ADJ:                 DUE U.S.:
BASE PAY:                   CIV SV CR:                 EIC.:
 BASE ADJ:                   CIV ADJ:                   EIC ADJ:
BILL OF COL:                CNTY TAX:                  FED TAXES:
BOND:                        CNTY ADJ:                  FEDTX ADJ:
 BOND REFND:                     RETIREMENT PLAN:            FEHB:   TEW:
        ADJ BASIC HR:                  PAID FLSA:           FEGLI:
--------------------------------------------------------------------------------
 PF1= HELP          PF3= PREV SCREEN       PF5= MAIN MENU       PF7= BACKWARD
 PF8= FORWARD       PF12= END
```

Pay Period History1 (QHIST1)

```
                                                                        92-06-01
COMMAND: ________                    NPPS                               08:50:57
NAO1591                PAY PERIOD HISTORY2 - QHIST2    2 OF 5
--------------------------------------------------------------------------------
SSN:              LAST NAME:                        FIRST NM:              I:
PAY ENDING DATE:

FEGLI:                     GROSS PAY:                  LOCAL PAY:
 FEGLI ADJ:                 FF PREM ADJ:                LOCAL ADJ:
FEHB:                       FOR DIF ADJ:               LUMP LEAVE:
 CUR ADJ:                   HAZARD ADJ:                 LUMP ADJ:
 FRMR ADJ:                  HOL WK ADJ:                MISC DED:
FERS:                       NT DIFF ADJ:               NEBA:
 CUR  ADJ:                  OT ADJ:                    NET PAY:
 FRMR ADJ:                  SUN DIF ADJ:               NITE DIFF:
FERS MIL:                  HAZ DUTY:                  OVERTIME:
FICA:                      HIT:                       UNUSE CT P:
                                                      PCA EARN:
                                                      PCA ADJ:
 FICA ADJ:                  HIT ADJ:                  PCS EARN:
FOR DIFF:                  HOLD WKED:
LTC:
--------------------------------------------------------------------------------
 PF1= HELP          PF3= PREV SCREEN       PF5= MAIN MENU       PF7= BACKWARD
 PF8= FORWARD       PF12= END
```

Pay Period History2 (QHIST2)

```
                                                                    COMMAND:
 ________                NPPS                                     16:23:15
 NAO1591             PAY PERIOD HISTORY3 - QHIST3       3 OF 5
 ---------------------------------------------------------------
 SSN:            LAST NAME:                      FIRST NM:  I:
 PAY ENDING DATE:

 RET ALLOW:                TFBP FED:           TSPCATCHUP:
  RET ADJ:                 TFBP ST:             TSP CU ADJ:
 STAFF DIFF:               TFBP CITY:          FSA HC:
  STAFF ADJ:               TSP DED:            FSA DC:
 STAT CUT:                  TSP ADJ:
 STATE TAX:                TSP LOAN:
  STTX ADJ:                 LOAN1 ADJ:
  FRMR ADJ:                 LOAN2 ADJ:
 SUN DIFF:                 UNION:
 SUPER DIFF:                UNION ADJ:
 SUPER ADJ:                VOL ALLOT:

 ---------------------------------------------------------------
PF1= HELP    PF3= PREV SCREEN   PF5= MAIN MENU  PF7= BACKWARD
  PF8= FORWARD       PF12= END
```

Pay Period History3 (QHIST3)

```
 COMMAND: ________                NPPS
 NAO1591              PAY PERIOD HISTORY4 - QHIST4      4 OF 5
 ---------------------------------------------------------------------------
 SSN:             LAST NAME:                      FIRST NM:             I:
 LEAVE PER:       PAY ENDING DATE:

          *** ANNUAL LEAVE ***                      *** SICK LEAVE ***

         PYCO        CUR        YTD                PYCO        CUR        YTD
 EARN:                                       EARN:
 USED:                                       USED:
 RIC:                                        RIC:
 BAL:                                        BAL:

      AL BAL:                                     SL BAL:

 LWOP CURR:           LWOP 80 HR:            RL PYCO:           RL USED:
 LWOP YTD:            LWOP WIG:              RL REST:           RL BAL:
 ---------------------------------------------------------------------------
  PF1= HELP          PF3= PREV SCREEN       PF5= MAIN MENU        PF7= BACKWARD
  PF8= FORWARD       PF12= END
```

Pay Period History4 (QHIST4)

```
COMMAND: ________                    NPPS
NAO1591                PAY PERIOD HISTORY5 - QHIST5       5 OF 5
--------------------------------------------------------------------------------
SSN:              LAST NAME:                        FIRST NM:              I:
PAY ENDING DATE:


     BASE HOURS:
     OVERTIME HOURS:
     NITE DIFF HOURS:
     HAZARDOUS HOURS:
     HOLIDAY WORKED:
     SUNDAY HOURS:





--------------------------------------------------------------------------------
 PF1= HELP          PF3= PREV SCREEN       PF5= MAIN MENU      PF7= BACKWARD
 PF8= FORWARD       PF12= END
```

Pay Period History5 (QHIST5)

DESCRIPTION AND EXECUTION

The Pay Period History (QHIST1-5) template is used to retrieve and display a complete employee history for a specified pay ending date. The items are grouped into categories, such as leave hours, and then listed in alphabetical order.

Steps to Reach Pay Period History

1. At the Main Menu, select **2** - Payroll.
2. At the Payroll Main Menu, select **2** - MER.
3. At the Master Employee Record Data Entry Menu, select **1** - Master Selection MER Menu.
4. At the Master Selection MER Menu, select **56** - Pay Period History.

This template is composed of five screens. You may move forward by pressing **PF8** and backward by pressing **PF7**.

4.2.2.4 Administrative

NPPS provides the capability to establish and maintain various administrative employee data. In addition, NPPS provides the capability to process a large group of actions for the same transaction at one time. This capability is referred to as mass transaction processing. Administrative actions include the following.

- Employee T&A Distribution
- Employee Mailing Address and Net Pay
- Spousal Health Benefits
- Student Loan Repayment
- Payroll Suspense Maintenance Query
- CFC Deductions Mass
- T&A Distribution Mass
- New Payblock Mass Update
- Donate Leave Mass
- Global Transactions, Financial Institution
- Global Transactions, T&A Distribution Code

4.2.2.4.1 Employee T&A Distribution

```
                                                                          91-09-09
COMMAND: ________                    NPPS                                 13:41:24
NAO1110              EMPLOYEE T & A DISTRIBUTION - TADIST
 ---------------------------------------------------------------------------

     SSN      PAYBLK   FUNC              LAST NAME                 FIRST NAME    I
  ___ __ ____            _              ______________________  ____________  _

TA DISTRIBUTION CODE:   ________       CHANGE TO NEW PAYBLOCK:  __
TOUR OF DUTY SHIFT: FR  ____           (EFFECTIVE NEXT PAY PERIOD)
                    TO  ____
TOUR TYPE:  _                          NEW EMPLOYEE ASSIGNED PAYBLOCK: __
COMPRESSED WORK WEEK ( /Y)  _          (EFFECTIVE THIS PAY PERIOD)
WEEKLY UNCOMMON TOUR HOURS: ______

ORG ASSIGNED:                    INSTALL EOD:                RETIREMENT PLAN:
DUTY STATUS:                     ORG LOCATED:                FACILITY CODE:
SCD LEAVE:                       DUTY STATION:               JOB SERIES:
                                 FTE LINE ITEM:
---------------------------------------------------------------------------
FUNCTIONS:  A= ADD CHN   C= CHANGE   N= NAME SEARCH   R= RETRIEVE   S= SUSPEND
 PF1= HELP           PF3= PREV SCREEN      PF4= QNORM           PF5= MAIN MENU
 PF9= QREG           PF12= END
```

Employee T&A Distribution (TADIST)

DESCRIPTION AND EXECUTION

The Employee T&A Distribution (TADIST) template is used to display and update an employee's T&A distribution code and tour of duty information.

<u>Steps to Reach Employee T&A Distribution</u>

1. At the Main Menu, select **2** - Payroll.
2. At the Payroll Main Menu, select **2** - MER.
3. At the Master Employee Record Data Entry Menu, select **1** - Master Selection MER Menu.
4. At the Master Selection MER Menu, select **57** - Employee T&A Distribution.

DESCRIPTION OF DATA PROCESSING AND OUTPUT

Values which may be entered or changed are T&A Distribution Code, Change to New Payblock, Tour of Duty Shift, and Tour Type. The remaining fields located on the bottom third of the screen are for display only. Information in these fields was entered by personnel at the time the individual was hired.

This is the first action in the New Employee Add Chain. To begin an add chain, enter **A** in the Func field. You may also begin an add chain from the New Employee List.

4.2.2.4.2 Employee Mailing Address and Net Pay

```
COMMAND: ________                    NPPS
NAO1120     EMPLOYEE MAILING ADDRESS AND NET PAY DISPOSITION - ADDR
--------------------------------------------------------------------------------
     SSN      PAYBLK   FUNC           LAST NAME                FIRST NAME    I
 ___ __ ____           _             ______________________  ____________  _
  MAILING ADDRESS:  ____________________________________
                    ____________________________________
  CITY:             ________________            STATE: ___   ZIP: _____ - ____
  NET-VIA-EFT:
       FINANCIAL INST ROUTING NBR:  _________
       ACCOUNT NUMBER:              ___________________    ACCOUNT TYPE:  _
  FIN. INST. NAME:
  ADDRESS FIN:

  CITY:                                         STATE:       ZIP:

  ADDRESS CHECK:    ____________________________________        OFFICE CHECK: _
                    ____________________________________        (Y OR BLANK)
  CITY:             ________________            STATE: ___   ZIP: _____ - ____
--------------------------------------------------------------------------------
FUNCTIONS:   A= ADD CHN   C= CHANGE   N= NAME SEARCH   R= RETRIEVE   S= SUSPEND
 PF1= HELP          PF3= PREV SCREEN   PF5= MAIN MENU        PF12= END_
```

Employee Mailing Address and Net Pay (ADDR)

DESCRIPTION AND EXECUTION

The Employee Mailing Address and Net Pay Disposition (ADDR) template is used to display and update an employee's mailing address as well as specify the disposition of an employee's net pay. When completing this template, either Net-via-EFT or Check Address must be specified (you may not specify both). Since the Mailing Address field will be used for general mail-outs, such as the Leave and Earnings Statements, it should be provided for all employees. For check disposition, the Net-via-EFT field or Address Check field should be completed.

USER INPUT

You must enter either the employee's Net-via-EFT data or Check Address. The Office Check field is used to instruct the Treasury to send the check to the installation "Designated Agent."

<u>Steps to Reach Employee Mailing Address and Net Pay</u>

1. At the Main Menu, select **2** - Payroll.
2. At the Payroll Main Menu, select **2** - MER.
3. At the Master Employee Record Data Entry Menu, select **1** - Master Selection MER Menu.
4. At the Master Selection MER Menu, select **58** - Employee Mailing Address and Net Pay.

4.2.2.4.3 Spousal Health Benefits

```
*** SSN/PAY PERIOD COMBINATION NOT FOUND

COMMAND: ________                  NPPS
NAO1238                SPOUSAL HEALTH BENEFITS - SPFEHB                      1
--------------------------------------------------------------------------------

     SSN      PAY PERIOD  FUNC         LAST NAME                FIRST NAME    I
 ___________      __        R          ______________________  ____________  _

TOTAL NUMBER SPOUSAL HEALTH BENEFITS RECORDS ON FILE:

      FEHB PLAN CODE:    ___

      FEHB CASH PAYMENT: ________

      DATE OF DATA ENTRY:

      REMARKS:  ____________________________________________________________

 PRESS ENTER TO GET NEXT SSN
--------------------------------------------------------------------------------
FUNCTIONS:     A= ADD       C= CHANGE      D= DELETE         R= RETRIEVE
 PF1= HELP         PF3= PREV SCREEN      PF5= MAIN MENU      PF12= END
```

Spousal Health Benefits (SPFEHB)

DESCRIPTION AND EXECUTION

The Spousal Health Benefits (SPFEHB) template is used to set up and maintain information regarding the spousal health benefits elected by an employee's ex-spouse. The employee's record does not reflect that a spousal health benefit is being paid. The ex-spouse's SSN establishes a separate record, and payment data only appears on the SF 1166 and SF 2812.

<u>Steps to Reach Spousal Health Benefits</u>

1. At the Main Menu, select **2** - Payroll.
2. At the Payroll Main Menu, select **2** - MER.
3. At the Master Employee Record Data Entry Menu, select **1** - Master Selection MER Menu.
4. At the Master Selection MER Menu, select **59** - Spousal Health Benefits.

4.2.2.4.4 Payroll Suspense Maintenance Query

```
COMMAND: ________                    NPPS
NAO1600        PAYROLL SUSPENSE MAINTENANCE QUERY - SQUERY                    1
-------------------------------------------------------------------------------

        LIST ACTION FOR EMPLOYEE:
             SSN           LAST NAME                FIRST NAME
         ___ __ ____       ________________________ ____________
                           (TYPE NAME AND HIT ENTER FOR NAME SEARCH)

                   SELECT ONE OF THE FOLLOWING:

          LIST ACTIONS ON OR BEFORE EFFECTIVE DATE: ______
                                     (PP FIRST DAY)
          LIST ACTIONS FOR TRANSACTION TYPE:        ________

          LIST ACTIONS FOR CLERK ID:                ________


-------------------------------------------------------------------------------
 PF1= HELP          PF3= PREV SCREEN      PF5= MAIN MENU       PF12= END
```

Payroll Suspense Maintenance Query (SQUERY)

DESCRIPTION AND EXECUTION

The Payroll Suspense Maintenance Query (SQUERY) template is used to select a method to display the suspended payroll information for an individual employee or group of employees. Information may be requested via one of three methods: (1) a list of actions on or before a given effective date, (2) a list of actions for a specified transaction type, or (3) a list of actions entered by a given clerk as referenced by the clerk's ID. After the method is chosen, NPPS displays the listings using either the List Actions for Employee (SEMP) template or the List Actions on Suspense (SACT) template.

USER INPUT

You may place actions on suspense until the pay period for which they apply. During initialization, NPPS searches the actions on the Payroll Suspense file and selects the actions with the pay period beginning date of the current pay period. It then applies these actions as updates to the appropriate master employee records.

```
*   NO SUSPENSE TO DISPLAY FOR SELECTION CRITERIA

COMMAND: ________                  NPPS
NAO1610              LIST ACTIONS FOR EMPLOYEE - SEMP                        1
--------------------------------------------------------------------------------

        SSN        PAY BLK          LAST NAME               FIRST NAME    I
      -  -

   SEL              DELETE   EFF DATE       TRANSACTION      CLERK      ERROR
                           (PP FIRSTDAY)       TYPE           ID        FLAG
    _                 _      ______
    _                 _      ______
    _                 _      ______
    _                 _      ______
    _                 _      ______
    _                 _      ______
    _                 _      ______
    _                 _      ______
    _                 _      ______
    _                 _      ______
--------------------------------------------------------------------------------
 PF1= HELP          PF3= PREV SCREEN      PF5= MAIN MENU        PF7= BACKWARD
 PF8= FORWARD       PF12= END
```

List Actions for Employee (SEMP)

```
* PLEASE ENTER SELECTION CRITERIA
                                                                      91-10-28
COMMAND: ________                  NPPS                               12:58:53
NAO1620              LIST ACTIONS ON SUSPENSE - SACT                         1
--------------------------------------------------------------------------------
SELECT ONE: EFF DATE: ________  TRANS TYPE: ________  CLERK ID: ________
SEL      SSN      DELETE    EFF. DATE    TRANSACTION    CLERK      SEQ   ERROR
                          (PP FIRST DAY)    TYPE         ID        NO    FLAG
 _                  _      ________
 _                  _      ________
 _                  _      ________
 _                  _      ________
 _                  _      ________
 _                  _      ________
 _                  _      ________
 _                  _      ________
 _                  _      ________
 _                  _      ________
--------------------------------------------------------------------------------
 PF1= HELP          PF3= PREV SCREEN      PF5= MAIN MENU        PF7= BACKWARD
 PF8= FORWARD       PF12= END
```

List Actions on Suspense (SACT)

After entering the information for an action on the appropriate template, you may place the action on suspense by typing **S** in the FUNC field and pressing **ENTER**. NPPS displays a pop-up menu which prompts you for the Effective Date of the action you want to place on suspense, as illustrated on the following screen. Enter the beginning date of the pay period for which the action applies and press **ENTER**. NPPS places the action on suspense and selects it to be matured during the initialization process of the designated future pay period.

```
COMMAND: ________                    NPPS
NAO1241                FEDERAL AND STATE TAXES - FTAX                  10
---------------------------------------------------------------------------
     SSN      PAYBLK   FUNC            LAST NAME                FIRST NAME    I
 269 00 0000    01       S             SMITH_________________   BETTY_______  A
                                 *** FEDERAL TAXES ***
MARITAL STATUS (M,S): S                                                   ___
EIC MARITAL CODE:     _                                                : _
(1=EMPLOYEE ONLY, 2=EMPLOYE      ___________________________________________
                                 |  ENTER THE EFFECTIVE DATE:  01011990 |
                                 |  (PP FIRST DAY - MMDDYYYY)           |
STATE CODE:    __      MARIT     |                                      |     __
ADD EXEMPTS:   __      FILIN     |        OR ENTER PF3 TO ESCAPE        |  _____
ALTERNATE AMT: ____    DEPEN     |                                      | , ): _
                                 |______________________________________|

 FILING STATUS (DC ONLY) - J=JOINTLY, S=SEPARATELY;   ALT % (AZ & MD ONLY)
 ALT AMT (NC ONLY);  DEPENDENT OF ANOTHER (AL ONLY);  WORKING SPOUSE (MS ONLY)
-----------------------------------------------------------------------------
FUNCTIONS:   A= ADD CHN   C= CHANGE   N= NAME SEARCH   R= RETRIEVE  S= SUSPEND
 PF1= HELP          PF3= PREV SCREEN   PF4= QNORM            PF5= MAIN MENU
 PF9= QREG          PF12= END
```

Suspended Action

Steps to Reach Payroll Suspense Maintenance Query

1. At the Main Menu, select **2** - Payroll.
2. At the Payroll Main Menu, select **2** - MER.
3. At the Master Employee Record Data Entry Menu, select **1** - Master Selection MER Menu.
4. At the Master Selection MER Menu, select **62** - Payroll Suspense Maintenance Query.

4.2.2.4.5 Student Loan Repayment

```
COMMAND: ________                    NPPS
     NAO1800                  STUDENT LOAN REPAYMENT - SLR
     ---------------------------------------------------------------------
         SSN        PAYBLK  FUNC     LAST NAME              FIRST NAME     I
      ___ __ ____           _        ______________   ____________   _

     CURR SLR PYMT       SLR YTD AMT     SLR QTD            SLR MTD
       _________

      REMARKS:_________________________  ENTER 'Y' IF CASH COLLECTION FOR TAXES _

      ADJUSTMENTS TO YTD TAX DEDUCTIONS:            FED ADJ:  ________
      (CASH COLLECTION FLAG MUST BE "Y")            HIT ADJ:  ________
                                              FICA ADJ: ________
                                                    STATE ADJ:________
                                                    CITY ADJ: ________
     ---------------------------------------------------------------------
     FUCTIONS: A=ADD C=CHANGE N=NAME SEARCH  R=RETRIEVE     S=SUSPEND     PF1=HELP
        PF3=PREV SCREEN       PF5=MAIN MENU  PF12=END
```

Student Loan Repayment (SLR)

DESCRIPTION AND EXECUTION

The Student Loan Repayment (SLR) template is used to add, display and change repayment information for an employee's student loan for tax and reporting purposes. If the taxes for the SLR amount are to be paid by payroll deduction (cash collection flag is blank), the amount of the SLR shall be added to the earnings subject to OASDI, HIT, federal, state and city taxes prior to computing taxes. If taxes are to be paid by cash (cash collection flag is 'Y'), the SLR amount will not be included for computation of taxes by the system, but will be used to update taxable earnings.

USER INPUT

You may place actions on suspense until the pay period for which they apply. During the payroll mature process, NPPS searches the actions on the Payroll Suspense file and selects the actions with the pay period beginning date of the current pay period. It then applies these actions as updates to the appropriate master employee records

<u>Steps to Reach Student Loan Repayment Screen:</u>

1. At the Main Menu, select **2** - Payroll.
2. At the Payroll Main Menu, select **2** - MER.
3. At the Master Employee Record Data Entry Menu, select **1** - Master Selection MER Menu.
4. At the Master Selection MER Menu, select **60** – Student Loan Repayment

4.2.2.4.6 CFC Mass Deductions

```
*   SPECIFY SSN'S FOR MASS CHANGES

COMMAND: ________                    NPPS
NAO1710                CFC DEDUCTIONS MASS - MASSCFC      1 OF 10
-------------------------------------------------------------------------------
FUNCTION:  R
                                                          CFC        DED
     SSN       EMPLOYEE NAME                             ORG       AMOUNT  STATUS

 ___ __ ____                                          _________    ______
 ___ __ ____                                          _________    ______
 ___ __ ____                                          _________    ______
 ___ __ ____                                          _________    ______
 ___ __ ____                                          _________    ______
 ___ __ ____                                          _________    ______
 ___ __ ____                                          _________    ______
 ___ __ ____                                          _________    ______
 ___ __ ____                                          _________    ______
 ___ __ ____                                          _________    ______

-------------------------------------------------------------------------------
FUNCTIONS:    C= CHANGE           R= RETRIEVE        S= SUSPEND
 PF1= HELP          PF3= PREV SCREEN        PF5= MAIN MENU       PF12= END
```

CFC Deductions Mass (MASSCFC)

DESCRIPTION AND EXECUTION

The CFC Deductions Mass (MASSCFC) template is used to input CFC deductions for up to 10 employees.

<u>Steps to Reach CFC Deductions</u>

1. At the Main Menu, select **2** - Payroll.
2. At the Payroll Main Menu, select **2** - MER.
3. At the Master Employee Record Data Entry Menu, select **1** - Master Selection MER Menu.
4. At the Master Selection MER Menu, select **63** - CFC Deduction Mass.

4.2.2.4.7 T&A Mass Distribution

```
* SPECIFY SSN'S FOR MASS CHANGES

COMMAND: ________                NPPS                  1 OF 10
NAO1720         TIME AND ATTENDANCE DISTRIBUTION MASS - MASSTA
-------------------------------------------------------------------------------
FUNCTION:  R
                                                          T&A
     SSN       EMPLOYEE NAME                            DISTRIBUTION  STATUS
                                                           CODE
 ___ __ ____                                             ________
 ___ __ ____                                             ________
 ___ __ ____                                             ________
 ___ __ ____                                             ________
 ___ __ ____                                             ________
 ___ __ ____                                             ________
 ___ __ ____                                             ________
 ___ __ ____                                             ________
 ___ __ ____                                             ________
 ___ __ ____                                             ________

-------------------------------------------------------------------------------
FUNCTIONS:     C= CHANGE        R= RETRIEVE            S= SUSPEND
 PF1= HELP          PF3= PREV SCREEN    PF5= MAIN MENU        PF12= END
```

Time and Attendance Distribution Mass (MASSTA)

DESCRIPTION AND EXECUTION

The Time and Attendance Distribution Mass (MASSTA) template is used to change T&A distribution codes on a large scale (i.e., up to 10 transactions at one time).

<u>Steps to Reach T&A Distribution Mass</u>

1. At the Main Menu, select **2** - Payroll.
2. At the Payroll Main Menu, select **2** - MER.
3. At the Master Employee Record Data Entry Menu, select **1** - Master Selection MER Menu.
4. At the Master Selection MER Menu, select **64** - T&A Distribution Mass.

4.2.2.4.8 New Payblock Mass Update

```
* SPECIFY SSN'S FOR MASS CHANGES

COMMAND: ________                    NPPS
NAO1725              NEW PAYBLOCK MASS UPDATE - MASSBLK    1 OF 10
-------------------------------------------------------------------------------
FUNCTION:  R
                                                CURRENT         NEXT
     SSN       EMPLOYEE NAME                    PAYBLOCK         PP     STATUS
                                                ASSIGNED      PAYBLOCK
 ___ __ ____                                                     __
 ___ __ ____                                                     __
 ___ __ ____                                                     __
 ___ __ ____                                                     __
 ___ __ ____                                                     __
 ___ __ ____                                                     __
 ___ __ ____                                                     __
 ___ __ ____                                                     __
 ___ __ ____                                                     __
 ___ __ ____                                                     __
 -------------------------------------------------------------------------------
FUNCTIONS:     C= CHANGE        R= RETRIEVE            S= SUSPEND
 PF1= HELP          PF3= PREV SCREEN    PF5= MAIN MENU        PF12= END
```

New Payblock Mass Update (MASSBLK)

DESCRIPTION AND EXECUTION

The New Payblock Mass Update (MASSBLK) template is used to change payblocks on a large scale (i.e., up to 10 transactions at one time).

<u>Steps to Reach New Payblock Mass Update</u>

1. At the Main Menu, select **2** - Payroll.
2. At the Payroll Main Menu, select **2** - MER.
3. At the Master Employee Record Data Entry Menu, select **1** - Master Selection MER Menu.
4. At the Master Selection MER Menu, select **65** - New Payblock Mass Update.

4.2.2.4.9 Mass Donated Leave

```
*   SPECIFY SSN OR FUNCTION = N 'NAME SEARCH'

COMMAND: ________                    NPPS
NAO1740                DONATED LEAVE MASS - MASDONOR         PAGE  1
-------------------------------------------------------------------------------
RECIPIENT SSN  PAYBLK    FUNC          LAST NAME                FIRST NAME    I
 ___ __ ____              R            ________________________  ____________  _
  INITIALIZE  _  (Y OR BLANK)
  RESTORED LV  _  (MARK 'X' TO RETRIEVE & PROCESS RESTLV DATA ONLY)
DONOR.....   DONATED   DONATED     CUM    DONOR..............................
    SSN       HOURS    RETURNED  DONATED  NAME OR COMMENT       GR  ST    RATE
 _________   _______   _______
 _________   _______   _______
 _________   _______   _______
 _________   _______   _______
 _________   _______   _______
 _________   _______   _______
 _________   _______   _______
 _________   _______   _______
 _________   _______   _______
 _________   _______   _______
-------------------------------------------------------------------------------
FUNCTIONS:    C= CHANGE      N= NAME SEARCH      R= RETRIEVE      S= SUSPEND
 PF1= HELP  PF3= PREV  PF5= MAIN   PF7= BACKWARD   PF8= FORWARD   PF12= END
```

Donated Leave Mass (MASDONOR)

DESCRIPTION AND EXECUTION

The Donated Leave Mass (MASDONOR) template is used to record employees' donations of earned annual leave and restored leave to another employee and returns of unused donated leave to donors. Using this template, up to 300 donated leave transactions may be recorded at one time. The template may be used to record donations or returns in one transaction (up to 300 entries before ENTER), but not both. The Cum Donated field will display the total number of leave hours donated to the recipient and not returned to the donor. The template will retrieve the donors previously entered, displaying their name, grade and step, and hourly rate. If a donor is not assigned to the same installation as the recipient, an informative message will appear in the Name and other fields. Donors may be eliminated by spacing out the displayed information when Cum Donated = 0 or when the recipient's Donated Balance = 0. In addition, if "Y" is entered in the Initialize field, all donor data on the screen will be blanked out during the initialization process. After the transaction is processed, an informative message will be returned that will contain the total hours donated or returned that were entered in the MASDONOR transaction, and the hours donated/returned fields on the template will be returned to blank. When restored leave hours are to be donated or returned, the RESTORED LV field must contain an 'X'. This provides the capability to separately account for the employees donating both types of leave.

<u>Steps to Reach Donated Leave Mass</u>

1. At the Main Menu, select **2** - Payroll.

2. At the Payroll Main Menu, select **2** - MER.
3. At the Master Employee Record Data Entry Menu, select **1** - Master Selection MER Menu.
4. At the Master Selection MER Menu, select **66** - Donated Leave Mass.

4.2.2.4.10 Global Transactions, Financial Institution

```
COMMAND: ________                    NPPS
NAO1730        GLOBAL TRANSACTIONS, FINANCIAL INST - GLOBFIN                 1
-------------------------------------------------------------------------------

FUNCTION:  R

                  FINANCIAL INSTITUTION ROUTING NUMBER

                    FROM:  __________  TO:  __________


                  NAME FROM:
                  NAME TO:

                  NUMBER OF EMPLOYEES AFFECTED:




-------------------------------------------------------------------------------
FUNCTIONS:    C= CHANGE             R= RETRIEVE           S= SUSPEND
 PF1= HELP         PF3= PREV SCREEN      PF5= MAIN MENU      PF12= END
```

Global Transactions, Financial Institution (GLOBFIN)

DESCRIPTION AND EXECUTION

The Global Transactions, Financial Institution (GLOBFIN) template is used to change the name and routing number of a financial institution. This change will be enacted for all employees who have elected to send voluntary allotments or net pay distributions to this financial institution.

<u>Steps to Reach Global Transactions, Financial Inst</u>

1. At the Main Menu, select **2** - Payroll.
2. At the Payroll Main Menu, select **2** - MER.
3. At the Master Employee Record Data Entry Menu, select **1** - Master Selection MER Menu.
4. At the Master Selection MER Menu, select **67** - Global Transactions, Financial Institution.

4.2.2.4.11 Global Transactions, T&A Distribution Code

```
COMMAND: ________                    NPPS
NAO1735        GLOBAL TRANSACTIONS, TA DIST CODE - GLOBTA                    1
--------------------------------------------------------------------------------

FUNCTION:  R

                    T&A DISTRIBUTION CODE

                    FROM:  ________   TO:  ________

                  NUMBER OF EMPLOYEES AFFECTED:





--------------------------------------------------------------------------------
FUNCTIONS:    C= CHANGE             R= RETRIEVE           S= SUSPEND
 PF1= HELP         PF3= PREV SCREEN      PF5= MAIN MENU      PF12= END
```

Global Transactions, T&A Distribution Code (GLOBTA)

DESCRIPTION AND EXECUTION

The Global Transactions, T&A Distribution Code (GLOBTA) template is used to change a T&A distribution code. The records of all employees who are assigned this distribution code will be updated with the new distribution code.

Steps to Reach Global Transactions, T&A Distribution Code

1. At the Main Menu, select **2** - Payroll.
2. At the Payroll Main Menu, select **2** - MER.
3. At the Master Employee Record Data Entry Menu, select **1** - Master Selection MER Menu.
4. At the Master Selection MER Menu, select **68** - Global Transactions, T&A Distribution Code.

4.2.2.4.12 Mass Awards Processing

```
COMMAND: ________                    NPPS
NAO1750                 MASS AWARD PROCESSING - MASSAWD
--------------------------------------------------------------------------------
BLK:  __    FUNCTION:  _

SEL     SSN     EMPL NAME                          NOAC DTY  EFF DATE  AWD AMT
                                                      STS

 _     -  -
 _     -  -
 _     -  -
 _     -  -
 _     -  -
 _     -  -
 _     -  -
 _     -  -
 _     -  -
 _     -  -
--------------------------------------------------------------------------------
FUNCTIONS:  C= CHANGE       R= RETRIEVE
SEL:        Y= CHECK        B= NET PAY        BLANK= NO CHECK
 PF1= HELP          PF3= PREV SCREEN       PF5= MAIN MENU       PF7= BACKWARD
 PF8= FORWARD       PF12= END_
```

Mass Awards Processing Menu (MASSAWD)

DESCRIPTION AND EXECUTION

The Mass Awards Processing (MASSAWD) template is used to update the local check designated agent field. All employees receiving an award amount are selected for update by pay block. The SEL field can have a value of "Y" or "B." A value of "Y" indicates that the award is to be paid locally and a separate check is to be issued. A value of "B" indicates that the award should be included in the employee's Net Pay and no separate check should be issued.

<u>Steps to Reach Mass Awards Processing</u>

1. At the Main Menu, select **2** - Payroll.
2. At the Payroll Main Menu, select **2** - MER.
3. At the Master Employee Record Data Entry Menu, select **1** - Master Selection MER Menu.
4. At the Master Selection MER Menu, select **69** - Mass Awards Processing.

4.2.2.4.13 Mass Extended Compensatory Time

```
COMMAND: ________                    NPPS                                14:25:15
NAO1760      MASS EXTENDED COMPENSATORY TIME - MASEXTCT     PAGE  1
 7200 ---------------------------------------------------------------------
     SSN     PAYBLK FUNC  EXT DATE    LAST NAME               FIRST NAME    I
 ___ __ ____          R    ________    ______________________  ____________  _

UPD  S EXTENDED ORIGINAL EXTEND ......................     CUM   CUM
SEL  T THRU DTE FRFTD DT YEARPP EARN DTE  RATE  HOURS      USED  FORFTD BALANCE
 _
 _
 _
 _
 _
 _
 _
 _
 _
 _
-------------------------------------------------------------------------------
FUNCTION:      C= CHANGE         N= NAME SEARCH         R= RETRIEVE
 PF1= HELP                PF3= PREV SCREEN              PF5= MAIN MENU
 PF7= BACKWARD            PF8= FORWARD                  PF12= END
```

Mass Extended Compensatory Time (MASEXTCT)

DESCRIPTION AND EXECUTION

The Mass Extended Compensatory Time (MASEXTCT) template is used to display pertinent extended/forfeited CT information and to apply the same extended thru date to multiple extended/forfeited records.

All extended/forfeited CT records, up to a total of 99 records, will be displayed. If a non-blank character is placed in one, and only one, UPD SEL field on the left side of the line that represents one extended/forfeited CT record, the EXTCT screen will be automatically displayed with the information from the record selected available for modification. Changing extended/forfeited CT information will not be permitted if the employee whose data is being displayed by EXTCT has a "good" T&A update status.

If a Function "C" is entered with an EXT DTE (extended through date), all extended/forfeited CT records with a non-blank character in the UPD SEL field will automatically be extended through the date entered.

Steps to Reach Mass Extended Compensatory Time

1. At the Main Menu, select **2** - Payroll.
2. At the Payroll Main Menu, select **2** - MER.
3. At the MER Data Entry Menu, select **1** - Master Selection MER Menu.
4. At the Master Selection MER Menu, select **70** - Mass Extended Compensatory Time.

4.2.2.4.14 Long Term Care Insurance - LTC

```
COMMAND: ________                    NPPS
 NAO1485             LONG TERM CARE INSURANCE  - LTC
 ------------------------------------------------------------------------------

      SSN      PAYBLK   FUNC           LAST NAME                FIRST NAME    I
  ___ __ ____             _            ______________________  ____________  _

                 BIWEEKLY
                 REQUESTED
                 PREMIUM       YTD DEDUCTION
EMPLOYEE:        _______
SPOUSE:          _______
DEPENDENT:       _______
TOTAL:


------------------------------------------------------------------------------
 FUNCTION:    C= CHANGE   N= NAME SEARCH   R= RETRIEVE
PF1= HELP  PF3= PREV SCREEN  PF5= MAIN MENU PF12= END
```

Long Term Care Insurance (LTC)

DESCRIPTION AND EXECUTION

The Long Term Care (LTC) template is used to review and maintain LTC requested premiums for employee, spouse and dependent coverage. The biweekly requested premium information is initialized after each pay period and new requested premium information for active participants is reloaded prior to running payroll. Only biweekly LTC requested premium information may be modified on this screen. This screen should only be modified if there is a problem with loading the incoming premium information. There will be audit information stored for any changes made to employee, spouse or dependent requested premium amounts on this screen.

<u>Steps to Reach LTC Life Insurance</u>

1. At the Main Menu, select **2** - Payroll.
2. At the Payroll Main Menu, select **2** - MER.
3. At the MER Data Entry Menu, select **1** - Master Selection MER Menu.
4. At the Master Selection MER Menu, select **14** – LTC Long Term Care Insurance

4.2.2.4.15 Transportation Fringe Benefit Program - TFBP

```
COMMAND: ________                    NPPS
 NAOxxxx            TRANSPORTATION FRINGE BENEFIT PROGRAM – TFBP
-------------------------------------------------------------------------------

      SSN      PAYBLK   FUNC     LAST NAME                FIRST NAME    I
  ___ __ ____             R     _______________________  ____________  _

         ENTERED
    TFBP B/W FED  TFBP B/W FED                    TFBP QTD FED        TFBP YTD FED
          100.00        100.00                         200.00              400.00
     ___________                                 ___________         ___________

ST   TFBP B/W ST   TFBP B/W ST    TFBP MTD ST     TFBP QTD ST         TFBP YTD ST
          100.00        100.00        100.00          200.00              400.00
     ___________                  ___________    ___________         ___________

CTY TFBP B/W CTY  TFBP B/W CTY   TFBP MTD CTY    TFBP QTD CTY        TFBP YTD CTY
          100.00        100.00         100.00         200.00              400.00
     ___________                  ___________    ___________         ___________
-------------------------------------------------------------------------------
  FUNCTIONS:       C= CHANGE      N= NAME SEARCH      R= RETRIEVE      S= SUSPEND
   PF1= HELP          PF3= PREV SCREEN   PF5= MAIN MENU        PF12= END
```

Transportation Fringe Benefit Program (TFBP)

DESCRIPTION AND EXECUTION

The Transportation Fringe Benefit Program (TFBP) template is used to establish and review an employee's TFBP amounts for the current pay period for federal, state, and city totals. The amounts will be entered quarterly but processed on a biweekly basis. With a good T&A status the processed fields will be updated with either the entered amount or zero. The processed TFBP fields are output only fields. The month to date (MTD), quarter to date (QTD), and year to date (YTD) amounts will be incremented by T&A processing and may be manually updated on this screen. The biweekly TFBP ENTERED amounts (1st column) and PROCESSED amounts (2nd column) will be reset by pay period initialization. The MTD and QTD fields will be initialized by pay period initialization after each appropriate pay period, and the YTD fields will be initialized at pay yearend. Amounts in these fields will reduce earnings subject to HIT, OASDI, Federal, State, and City Taxes. There will be audit information stored for any changes made to the fields on this screen.

<u>Steps to Reach TFBP</u>

1. At the Main Menu, select **2** - Payroll.
2. At the Payroll Main Menu, select **2** - MER.
3. At the MER Data Entry Menu, select **1** - Master Selection MER Menu.

4. At the Master Selection MER Menu, select **61** – Transportation Fringe Benefit.

Pay Computations (T&A and Vouchering)

```
COMMAND: ________                N P P S
NAO0000                   PAYROLL MAIN MENU - MMPAY
--------------------------------------------------------------------------------
                    CENTER ID:        NPPS VERSION:

                    ENTER ONE OF THE FOLLOWING SELECTIONS: _


                          1 - TIME & ATTENDANCE

                          2 - MER

                          3 - TABLE PROCESSING

                          4 - VOUCHERING

                          5 - NON-PERSONNEL ACTION CASH AWARDS


--------------------------------------------------------------------------------
 PF1= HELP                  PF5= MAIN MENU                    PF12= END
```

Payroll Main Menu (MMPAY)

DESCRIPTION AND EXECUTION

Payroll computations include T&A and Payroll Vouchering operations accessed through the Payroll Main Menu (MMPAY). NPPS computes leave and pay based on the T&A data and payroll actions that affect the current pay period earnings, deductions, or leaves balances.

Steps to Reach Time and Attendance

1. At the Main Menu, select **2** - Payroll.
2. At the Payroll Main Menu, select **1** - Time and Attendance.

Steps to Reach Vouchering

1. At the Main Menu, select **2** - Payroll.
2. At the Payroll Main Menu, select **4** - Vouchering.

Throughout the Payroll Computation section, special sets of function and PF keys are available to you. Though not every function and PF key appears on all screens, the following complete set is provided so that you may become familiar with them.

Use of Functions

C=Change	Allows you to change information about an existing employee.
N=Name Search	Allows you to enter an employee's name or partial name and retrieve the SSN. If more than one employee satisfies the name search, a listing of all employees with that name will be displayed on the screen. You may then select the specified employee, and NPPS will enter the SSN on the screen so that you may continue as if you had entered the SSN directly.
S=Split Shift	Allows you to indicate that an employee has worked a split shift during the T&A processing.
H=Hundred Totals	Allows you to view the totals for a group of one hundred employees within the same payblock.
B=Block Totals	Allows you to view the totals for an entire payblock.

Use of PF Keys

The four standard PF keys which appear on most menus and templates are PF1=Help, PF3=Previous Screen, PF5=Main Menu, and PF12=End. Two additional keys, PF7=Backward and PF8=Forward, allow you to move between the pages of a template composed of more than one screen.

The PF2=More Messages may be used to view additional messages during the T&A Edit process. This feature is provided because NPPS may not be able to display all messages on the same screen.

4.2.2.4.16 Flexible Spending Account - FSA

```
COMMAND: ________                    NPPS
                        FLEXIBLE SPENDING ACCOUNT  - FSA
 ------------------------------------------------------------------------------

      SSN      PAYBLK   FUNC          LAST NAME                FIRST NAME    I
 ___ __ ____            _            ______________________  ____________  _

                 BIWEEKLY            BIWEEKLY
                 REQUESTED           DEDUCTION
                 ALLOTMENT           TAKEN              YTD DEDUCTION

FSA HC:
FSA DC:

TOTAL:


 ------------------------------------------------------------------------------
 FUNCTION:    C= CHANGE   N= NAME SEARCH   R= RETRIEVE
PF1= HELP  PF3= PREV SCREEN  PF5= MAIN MENU PF12= END
```

Flexible Spending Account (FSA)

DESCRIPTION AND EXECUTION

The Flexible Spending Account (FSA) template is used to review and maintain FSA requested allotment amounts for health and dependent care. The biweekly requested allotment amounts are loaded by a batch interface job or by manual effort. The biweekly deductions taken will match the biweekly requested allotments or be zero (employee does not have enough pay to take the deduction). Year-to-date deductions are informational only and may not be modified on this screen. Biweekly requested allotment amounts are initialized at pay year-end. This screen should only be modified if there is a problem with loading the incoming allotment amount information. There will be audit information stored for any changes made to health or dependent care requested allotment amounts on this screen.

An edit exists that will not allow a biweekly allotment amount to be entered that when multiplied by the remaining number of pay periods in the year will cause the YTD deduction (including any transferred-in amounts) to exceed the yearly maximum for HC and / or DC. The edit is performed when manual entry is done on this screen. The same edit exists in the CA00560 (Incoming FSA File) Job Stream and will prevent the allotment amount from being loaded to the screen.

Steps to Reach Flexible Spending Account (FSA) Screen

1. At the Main Menu, select **2** - Payroll.
2. At the Payroll Main Menu, select **2** - MER.
3. At the MER Data Entry Menu, select **1** - Master Selection MER Menu.

4. At the Master Selection MER Menu, select **15** - Flexible Spending Account (FSA)

4.2.2.5 Time and Attendance Main Menu

```
COMMAND: ________                N P P S
NAO3000                     T&A MAIN MENU - TAMEN
--------------------------------------------------------------------------------



                ENTER ONE OF THE FOLLOWING SELECTIONS: _

                          1 - T&A EDIT

                          2 - T&A REPORTED HOURS

                          3 - PAYROLL REGISTER



--------------------------------------------------------------------------------
 PF1= HELP           PF3= PREV SCREEN   PF5= MAIN MENU        PF12= END
```

T&A Main Menu (TAMEN)

DESCRIPTION AND EXECUTION

The T&A Main Menu (TAMEN) is used to access the T&A Edit section of payroll computation, illustrated in Figure 4.2.2.1-1, T&A Processing. In addition, this menu is used to view the T&A Reported Hours and the Payroll Register.

Steps to Reach T&A Main Menu

1. At the Main Menu, select **2** - Payroll.
2. At the Payroll Main Menu, select **1** - Time and Attendance.

DESCRIPTION OF DATA PROCESSING RESULTS AND OUTPUT

The results of the T&A processing are as follows.

- Employee record updates of T&A reported hours.
- T&A reported hours control.
- Biweekly totals of reported hours for each employee and payblock.
- Error and information messages from T&A online data entry.

4.2.2.5.1 T&A Edit

```
* SPECIFY NEW PAYBLOCK AND SELECTION, OR USE PF KEYS

COMMAND: ________   NPPS - OFFICIAL PAY RECORD - TAEDIT
NAO3100  ----------------------------------------------------------------------
FUNCTION _ SEL _   PAYBLOCK __ SSN ___ __ ____ EMP#          CMPRSD WEEK(Y/ ) _
LAST NAME ______________________ FIRST ____________  MI _    DATE
         REG    OT     ND     CTE    HOL    SD     HD          CD  OTH  CD  OTH
WEEK1 ______ ______ ______ ______ ______ ______ ______         _ ______ _ ______
SH: _   AL     SL     CTU   LWOP   SUSP   AWOL    HOL    RST  _ ______ _ ______
      ______ ______ ______ ______ ______ ______ ______ ______
         REG    OT     ND     CTE    HOL    SD     HD          CD  OTH  CD  OTH
WEEK2 ______ ______ ______ ______ ______ ______ ______         _ ______ _ ______
SH: _   AL     SL     CTU   LWOP   SUSP   AWOL    HOL    RST  _ ______ _ ______
      ______ ______ ______ ______ ______ ______ ______ ______ LAST SHIFT WRKD _
***************************** BIWEEKLY TOTALS ********************************
WORK  ______ ______ ______ ______ ______ ______ ______         FACILITY CODE:
LEAVE ______ ______ ______ ______ ______ ______ ______              ORG CODE:
OTHER-  J ______  M ______  A ______  G ______  E ______  C ______  T ______
 LEAVE  I ______  H ______  Y ______  D ______  Z ______  R ______


-------------------------------------------------------------------------------
FUNCTION: B= BLOCK TOT  C= CHANGE  H= HUNDRED TOT  N= NAME SRCH  S= SPLIT SHIFT
  PF1= HELP  PF2= MORE MESSAGES  PF3= PREV SCREEN  PF5= MAIN MENU  PF12= END
```

NPPS - Official Pay Record (TAEDIT)

DESCRIPTION AND EXECUTION

The NPPS - Official Pay Record (TAEDIT) template is used to enter an employee's T&A data online and to correct T&A transactions which NPPS marked as being in error when the T&A batch process was run. NPPS marks T&A transactions which are in error after running validity tests for hours worked, leave hours, and other totals.

T&A is the only source of current hours from which NPPS computes earnings. The T&A transaction must pass field edits and be validated. NPPS can process a maximum of three shifts in the same week. In addition, NPPS automatically creates T&A transactions for those employees who are on LWOP status in the current pay period during the T&A batch process.

For employees working uncommon tours (firefighters, etc.), all hours worked, including overtime, must be entered into the Regular Hours field of the TAEDIT template. The Overtime Hours field must contain only the overtime hours in excess of eight per day (also included in the Regular Hours entry).

<u>Steps to Reach T&A Edit</u>

1. At the Main Menu, select **2** - Payroll.
2. At the Payroll Main Menu, select **1** - Time and Attendance.
3. At the T&A Main Menu, select **1** - T&A Edit.

The first two lines below the template title provide information about the employee such as name, SSN, and payblock. The next four lines provide information about the two weeks which compose each pay period. The types of hours, both earned and used, are shown for each week. Also, a space is provided in which the employee's shift code for each week is entered/displayed. This space is labeled SH for shift worked. The abbreviated names for the types of hours earned and worked are as follows.

- Regular (REG)
- Overtime (OT)
- Night Differential (ND)
- Compensatory Time Earned (CTE)
- Holiday Leave Used (HOL)
- Sunday Differential (SD)
- Hazard Duty (HD)
- Annual Leave (AL)
- Sick Leave (SL)
- Compensatory Time Used (CTU)
- Leave Without Pay (LWOP)
- Suspension (SUSP)
- Absent Without Leave (AWOL)
- Restored Leave (RST)

The last section of the TAEDIT template displays the biweekly totals. The other Leave categories and their abbreviated names are as follows.

A	Administrative
C	Court
D	Credit Hours Used
E	Excused
G	Graduate
H	Home Leave
I	COP
J	Jury
M	Military
R	Religious Comp Time Used
T	Time-Off
Y	Credit Hours Earned
Z	Religious Comp Time Earned

4.2.2.5.2 T&A Reported Hours

```
COMMAND: ________                    NPPS
NAO3200              T & A REPORTED HOURS - QTAR -
FUNCTION: _    PAY BLOCK __    SSN ___ __ ____  THRU
  T & A'S   PRESENT:       ERRORS:       MISSING:       REACTIVATIONS:
    REGULAR:                          OTHER LEAVE:
    OVERTIME:                           A - ADMINISTRATIVE:
    NIGHT DIFF:                         C - COURT:
    COMP EARNED:                        D - CREDIT USED:
    HOLIDAY WORKED:                     E - EXCUSED:
    SUNDAY DIFF:                        G - GRADUATE:
    HAZARD DUTY:                        H - HOME LEAVE:
    ANNUAL LEAVE:                       I - COP:
    SICK LEAVE:                         J - JURY:
    COMP TAKEN:                         M - MILITARY:
    LWOP:                               R - REL CT USED:
    SUSPENSION:                         T - TIME OFF AWARD:
    AWOL:                               Y - CREDIT EARNED:
    HOLIDAY:                            Z - REL CT EARNED:
    RESTORED LEAVE:
FUNCTION: H= HUNDRED TOT / SCROLL      B= BLOCK TOT  C= CENTER TOT
   PF1= HELP     PF3= PREV SCREEN     PF5= MAIN MENU     PF12= END
```

T&A Reported Hours (QTAR)

DESCRIPTION AND EXECUTION

The T&A Reported Hours (QTAR) template is used to display the control totals for each type of T&A reported hours entered. Totals may be displayed for the center level, payblock level, for groups of 100 employees within each payblock, and for the agency level (for CPO Users). NPPS provides control totals for each type of hours reported, the number of missing T&As, the number of T&As present, the number of T&As in error, and the number of employees reactivated for pay this pay period.

Steps to Reach T&A Reported Hours

1. At the Main Menu, select **2** - Payroll.
2. At the Payroll Main Menu, select **1** - Time and Attendance.
3. At the T&A Main Menu, select **2** - T&A Reported Hours.

DESCRIPTION OF DATA PROCESSING AND OUTPUT

To display the totals you require, select the appropriate function code: **H** for Hundred Totals in the payblock specified, **B** for Payblock Totals in the payblock specified, or **C** for Center Totals.

CPO Center

When T&A Reported Hours (QTAR) is accessed using the CPO USER-ID. CPO User can retrieve and display the control total for each type of T&A reported hours for the Center. A Function of ‘C’ and Pay Block ‘98’ retrieves and displays total for NASA Agency.

4.2.2.5.3 Payroll

```
COMMAND: ________                    NPPS
NAO1550                   PAYROLL REGISTER - QREG       1 OF 3
PAY BLOCK: __ OR SSN: ___ __ ____ NAME: ______________________ ____________ _

   ADD:                       ADD: NET + DED            ADD: NET + DED
 BASIC PAY                  NET EARN                  FEHB
 OVERTIME                   ADV PAY                   FERS
 NITE DIF                   BANKRUPTCY                FERS MIL
 HOL WKD                    BONDS                     FICA
 LUMP SUM                   CFC                       INDEBT US
 UNUS CT PD                 CHILD SUPP                HIT
 SUN DIF                    C GARNISH                 MISC
 HAZARD                     CIV SV CR                 NEBA
 FOREN-DIF                  CITY TAX                  STATE TAX
 SUPER DIFF                 COUNTY TAX                TSP
 RET ALLOW                  CSRS                      TSP LOAN
 STAFF DIFF                 CSRS MIL                  UNION
*AUO/AVAIL                  FED TAX                   VOL ALLOT
 PCA                      FEGLI
 LOCAL PAY                  LTC                        SUB TOT
-------------------------------------------------------------------------------
 PF1= HELP          PF3= PREV SCREEN     PF5= MAIN MENU       PF7= BACKWARD
 PF8= FORWARD       PF9= NAME SEARCH     PF12= END
```

Payroll Register - QREG (Page 1)

```
COMMAND: ________                    NPPS
NAO1550                   PAYROLL REGISTER - QREG       2 OF 3
PAY BLOCK: __ OR SSN: ___ __ ____ NAME: ______________________ ____________ _

                              ADD: ADJUSTMENTS           LESS: REFUNDS/CREDIT
 BASIC ADJ                    (-)                        (+)
 OT ADJ                     BILL OF CO                BOND REF
 NITE ADJ                   CFC                       CFC
 HOL WKD AD                 CITY TAX                  CITY TAX
 SUN ADJ                    CIV SV CR                 CIV SV CR
 HAZ ADJ                    CNTY TAX                  CNTY TAX
 FIR PR ADJ                 COLA                      COLA
 FOR DF ADJ                 CSRS                      CSRS
 SUP DF ADJ                 EIC                       EIC
 RET AL ADJ                 FED TAX                   FED TAX
 STF DF ADJ                 FEGLI                     FEGLI
*AUO    ADJ                 FEHB                      FEHB
 LOCAL  ADJ                 FERS                      FERS
                            FICA                      FICA
-------------------------------------------------------------------------------
 PF1= HELP          PF3= PREV SCREEN     PF5= MAIN MENU       PF7= BACKWARD
 PF8= FORWARD       PF9= NAME SEARCH     PF12= END
```

Payroll Register - QREG (Page 2)

```
COMMAND: ________                    NPPS
NAO1550                    PAYROLL REGISTER - QREG       3 OF 3
PAY BLOCK: __ OR SSN: ___ __ ____ NAME: ____________________ ____________ _

                              ADD: ADJUSTMENTS           LESS: REFUNDS/CREDIT
                              (-)                        (+)
                           HIT                        HIT
                           ST TAX                     ST TAX
                           TSP ADJ                    TSP ADJ
                           TSP LOAN                   TSP LOAN
                           UNION DUES                 UNION DUES
                           ADV PAY                    ADV PAY
   SUB TOT                    SUB TOT                    SUB TOT
 LESS:S CUT                                              LESS:
   TOT ERN                                             EIC AMT(+)
                                                       COLA   (+)

   TOT ERN                                                TOT ERN
-------------------------------------------------------------------------------
 PF1= HELP          PF3= PREV SCREEN     PF5= MAIN MENU       PF7= BACKWARD
 PF8= FORWARD       PF9= NAME SEARCH     PF12= END
```

Payroll Register - QREG (Page 3)

DESCRIPTION AND EXECUTION

The Payroll Register (QREG) template is used to retrieve and display payroll register summary information for an individual employee, single payblock, or for the entire center.

Steps to Reach Payroll Register

1. At the Main Menu, select **2** - Payroll.
2. At the Payroll Main Menu, select **1** - Time and Attendance.
3. At the T&A Main Menu, select **3** - Payroll Register.

This template is composed of three screens. You may move forward by pressing **PF8** and backward by pressing **PF7**.

DESCRIPTION OF DATA PROCESSING AND OUTPUT

To view the totals for an individual, enter the individual's payblock and SSN in the fields provided at the top of the page and press **ENTER**. To view the totals for a single payblock, enter only the payblock number and press **ENTER**. To view the totals for the entire center, enter the number **99** in the payblock field and press **ENTER**.

The label AUO will be replaced with AVAIL PAY if the employee is getting availability pay.

When Payroll Register screen is accessed using CPO USER-ID. CPO User can retrieve and display payroll register summary information for an individual employee, single payblock, the Center, or NASA Agency using Pay Block 98.

4.2.2.6 Vouchering Main Menu

```
COMMAND: ________                N P P S
NAO4000                   VOUCHERING MAIN MENU - VOUCHMEN
--------------------------------------------------------------------------------


                    ENTER ONE OF THE FOLLOWING SELECTIONS: _

                        1 - VOUCHER CHAIN (SF2812,SF2812A,
                            OPM1523, TSP-2)

                        2 - SF1166 CHAIN

                        3 - REGISTER TOTALS

                        4 - ACCOUNTING BREAKOUTS



--------------------------------------------------------------------------------
          PF1= HELP        PF5= MAIN MENU           PF12= END SESSION
```

Vouchering Main Menu (VOUCHMEN)

DESCRIPTION AND EXECUTION

The Vouchering Main Menu (VOUCHMEN) is used to select one of the four options available for viewing the vouchering screens which contain the online voucher information, as illustrated in Figure 4.2.2.2-1, Vouchering.

Steps to Reach Vouchering Main Menu

1. At the Main Menu, select **2** - Payroll.
2. At the Payroll Main Menu, select **4** - Vouchering.

4.2.2.6.1 Voucher Chain

```
 COMMAND: ________                    NPPS
 NAO4900   VOUCHER INFORMATION - SF2812, SF2812A, AND OPM1523 INSURANCE
-------------------------------------------------------------------------------
 LIFE INSURANCE       EMPL  W.H.      GOVT. CONTR.     DEDUCTIONS   NOT DEDUCTED
    BASIC LIFE            68.66            34.34              7            50
    OPT A STND             7.00                               1             8
    OPT B ADDL            17.60                               1            12
    OPT C FAMILY           4.60                               3            15
         TOTAL            97.86                              12            85
```

Voucher Information - SF 2812, SF 2812A, and OPM 1523 Insurance (Page 1)

```
 COMMAND: ________                    NPPS
 NAO4900   VOUCHER INFORMATION - SF2812, SF2812A, AND OPM1523 INSURANCE
-------------------------------------------------------------------------------
OPT B BREAKOUT
LIFE INSURANCE     EMPL  W.H.        GOVT. CONTR.    DEDUCTIONS   NOT DEDUCTED
      UNDER 35
         34-39
         40-44
         45-49
         50-54
         55-59
         60-64
         65-69
         70-74
         75-79
         80-UP



 -------------------------------------------------------------------------------
PF1= HELP  PF3= PREVIOUS  PF5= MAIN MENU  PF12= END SESSION  ENTER= NEXT SCRN
```

Voucher Information - SF 2812, SF 2812A, and OPM 1523 Insurance (Page 2)

```
COMMAND: ________
NAO4300                              NPPS
    VOUCHER INFORMATION - SF2812, SF2812A, AND OPM1523 FEHB BREAKOUT
--------------------------------------------------------------------------------
                        HEALTH BENEFITS DEDUCTIONS
    ENROLL                                -------- NUMBER OF PAYMENTS --------
   CODE NO.             AMOUNT            MADE   NOT MADE SPOUSAL FULL PREMIUM

      D21                                            1
      UM1                                            1
      UP1                                            1
      UP2                                            1
      V11                                            2
      V12                202.79              1       1
      101                                            4
      102                                            3
      104                 67.68              1       6
      105                284.42              2       8
      311                                            1
      312                                            1
--------------------------------------------------------------------------------
 PF1= HELP   PF3= PREV SCREEN   PF5= MAIN MENU   PF12= END   ENTER= NEXT SCREEN
```

Voucher Information - SF 2812, SF 2812A, and OPM 1523 FEHB Breakout (Page 1)

```
COMMAND: ________
NAO4300                          NPPS
    VOUCHER INFORMATION - SF2812, SF2812A, AND OPM1523 FEHB BREAKOUT
--------------------------------------------------------------------------------
                        HEALTH BENEFITS DEDUCTIONS


 EMPLOYEE AMT                   564.87
 GOVT. CONTR                    163.30
 CASH COLL.
 SPOUSAL PAYMT.                 150.00
 YTD FEHB ADJ (THIS PP)

 TOTAL FEHB                     878.17





--------------------------------------------------------------------------------
   PF1= HELP                   PF5= MAIN MENU                  PF12= END
                             ENTER= NEXT SCREEN
```

Voucher Information - SF 2812, SF 2812A, and OPM 1523 FEHB Breakout (Page 2)

```
COMMAND: ________                     NPPS
NAO4960    VOUCHER INFORMATION - SF2812 & OPM1523 RETIREMENT (1 OF 2)
--------------------------------------------------------------------------------

                                DOLLAR        AGG BASE         DEDUCTIONS
   CSRS                         AMOUNT         SALARY        MADE  NOT MADE

RETIRE TOTAL - EMPL                 1023.23        14617.60
RETIRE TOTAL - EMPR                 1123.23

 WITHOLDING - ALL CATEGORIES        1023.23        14617.60      6     36
 EMPR       - ALL CATEGORIES        1023.23
 SAL OFFSET REEMPLD ANNUIT           100.00                             5
 MILITARY SERVICE DEPOSIT
 CIVILIAN SERVICE CREDIT




--------------------------------------------------------------------------------
  PF1= HELP      PF3= PREVIOUS        PF5= MAIN MENU        PF12= END SESSION
                             ENTER= NEXT SCREEN
```

Voucher Information – SF 2812 Retirement (Page 1)

```
COMMAND: ________                    NPPS
NAO4960    VOUCHER INFORMATION - SF2812 & OPM1523 RETIREMENT (2 OF 2)
--------------------------------------------------------------------------------
                                 DOLLAR        AGG BASE       DEDUCTIONS
   FERS                          AMOUNT         SALARY       MADE  NOT MADE
RETIRE TOTAL - EMPL                 69.44         2207.62
RETIRE TOTAL - EMPR                329.43
 REGULAR - K EMPL                   14.80         1850.40       1     37
 REGULAR - K EMPR                  238.70
 MIL RESERVE TECH - N EMPL
 MIL RESERVE TECH - N EMPR
 SPECIAL - M EMPL                    4.64          357.22       1      2
 SPECIAL - M EMPR                   90.73
 SAL OFFSET REEMPLD ANNUIT                                              1
 MILITARY SEVICE DEPOSIT            50.00                        1

 TOTAL RETIREMENT                 2545.33                        9     81
 TOTAL EMPLOYEES                   101
--------------------------------------------------------------------------------
  PF1= HELP      PF3= PREVIOUS        PF5= MAIN MENU        PF12= END SESSION
                            ENTER= NEXT SCREEN
```

Voucher Information – SF 2812 Retirement (Page 2)

```
COMMAND: ________                    NPPS
NAO4910                 TSP VOUCHER INFORMATION - TSP2
-------------------------------------------------------------------------------
                       CURRENT AND LATE   NEGATIVE ADJUSTMENTS

 EMP DED:
 GOV BASIC:
 GOV MATCH:
 TOTAL:
 CONTROL TOTAL:





--------------------------------------------------------------------------------
    PF1 = HELP       PF3 = PREVIOUS        PF5 = MAIN MENU        PF12 = END_
```

Voucher Information - TSP2

DESCRIPTION AND EXECUTION

The Voucher Chain option displays the screens that contain the online voucher information for SF 2812, SF 2812A, OPM 1523 Insurance, and TSP2.

Steps to Reach Voucher Chain

1. At the Main Menu, select **2** - Payroll.
2. At the Payroll Main Menu, select **4** - Vouchering.
3. At the Vouchering Main Menu, select **1** - Voucher Chain.

4.2.2.6.2 SF 1166 Chain

```
COMMAND: ________                    NPPS
NAO4100                  SF1166 INFORMATION - PAYMENTS
-------------------------------------------------------------------------------

 EFT PAYMENTS                    ITEM COUNT                  AMOUNT
   NET PAY                             5                       7033.87
   SAVINGS ALLOTMENTS                  7                        600.00
   TSP LOAN                            1                         54.95
   FSA HC                              4                        345.83
   FSA DC                              3                        443.33
       TOTAL                          13                       7688.82


 NON EFT PAYMENTS                ITEM COUNT                  AMOUNT
   NAME ONLY - OFFICE CKS
   NAME ONLY - AWARDS CKS
   SALARY CHECKS MAILED                4                       3930.38
   MISCELLANEOUS CHECKS               16                        953.50
      TOTAL                           20                       4883.88

 LONG TERM CARE                   ITEM COUNT                  AMOUNT
   EMPLOYEE                                                    9999.99
   SPOUSE                                                      9999.99
   DEPENDENT                                                   9999.99
         TOTAL                      9999                      99999.99

-------------------------------------------------------------------------------
    PF1 = HELP       PF3 = PREVIOUS        PF5 = MAIN MENU        PF12 = END
                         ENTER= NEXT SCREEN
```

SF 1166 Information - Net Pay

```
COMMAND: ________                    NPPS
NAO4200            SF1166 INFORMATION - FEDERAL RESERVE TAXES
-------------------------------------------------------------------------------

          FED TAX              FICA                HIT           COMBINED
         WITHHELD           WITHHELD           WITHHELD              TOTAL

          3574.55             136.87             278.94            3990.36



                               GOVT               GOVT
                               FICA                HIT
                             136.87             278.94



                                          TOTAL FEDERAL RESERVE DEPOSIT
                                                                 4406.17
-------------------------------------------------------------------------------
    PF1= HELP        PF3= PREVIOUS         PF5= MAIN MENU         PF12= END
                               ENTER= NEXT SCREEN
```

SF 1166 Information - Federal Reserve Taxes

```
 END OF DATA
COMMAND: ________                    NPPS
NAO4500               SF1166 INFORMATION - CFC TOTALS

           CFC ORGANIZATION                            AMOUNT

    1989      GULF COAST COMBINED                          1.00
    1989 CFC,HARRISON,HANCOCK                              6.00









    TOTAL AMOUNT                                           7.00
--------------------------------------------------------------------------------
    PF1= HELP      PF3= PREV SCREEN       PF5= MAIN MENU        PF12= END
                            ENTER= NEXT SCREEN
```

SF 1166 Information - CFC Totals

```
END OF DATA
COMMAND: ________                    NPPS
NAO4800                   SF1166 INFORMATION - SF16EBND

      TOTAL SERIES EE BONDS    DENOMINATION             AMOUNT
            PURCHASED
                  2                 100                    100.00
                                    200
                                    500
                                   1000





GRAND TOTAL SERIES EE BONDS PURCHASED             GRAND TOTAL AMOUNT
                  2                                        100.00
--------------------------------------------------------------------------------
   PF1= HELP        PF3= PREV SCREEN         PF5= MAIN MENU        PF12= END
                            ENTER= NEXT SCREEN
```

SF 1166 Information – Series EE Bonds

```
END OF DATA
   COMMAND: ________                    NPPS
   NAO4800                   SF1166 INFORMATION - SF16IBND

         TOTAL SERIES I BONDS      DENOMINATION             AMOUNT
               PURCHASED
                     1                  50                    50.00
                                        75
                     2                 100                   200.00
                                       200
                                       500
                                      1000




      GRAND TOTAL SERIES I BONDS PURCHASED         GRAND TOTAL AMOUNT
                     3                                     250.00
-------------------------------------------------------------------------------
   PF1= HELP        PF3= PREV SCREEN         PF5= MAIN MENU        PF12= END
                              ENTER= NEXT SCREEN
```

SF 1166 Information – Series I Bonds

```
 END OF DATA
COMMAND: ________                    NPPS
NAO4700               SF1166 INFORMATION - UNION DUES

                UNION NAME                        AMOUNT

      TEST UNION 1                                   17.00
      TEST UNION 2                                    4.00
      TEST UNION 3                                    8.00









      TOTAL AMOUNT                                   29.00
-------------------------------------------------------------------------------
  PF1= HELP         PF3= PREV SCREEN         PF5= MAIN MENU       PF12= END
                              ENTER= NEXT SCREEN
```

SF 1166 Information - Union Dues

```
 END OF DATA
COMMAND: ________                    NPPS
NAO4930             SF1166 INFORMATION - STATE/LOCAL TAXES

            STATE/CITY/COUNTY              AMOUNT         GROSS EARNINGS

      CALIFORNIA                            255.59         9999999999.99
      DIST. OF COL                          740.25         9999999999.99









      TOTAL AMOUNT                          632.39         9999999999.99
-------------------------------------------------------------------------------
  PF1= HELP         PF3= PREV SCREEN         PF5= MAIN MENU       PF12= END
                              ENTER= NEXT SCREEN
```

SF 1166 Information - State/Local Taxes

```
COMMAND: ________                    NPPS
NAO4940          SF1166 INFORMATION - MISCELLANEOUS PAYMENTS



                 U.S. DEBT                                  0.00
                 CHILD SUPPORT                              0.00
                 COMMERCIAL GARNISHMENTS                    0.00
                 BANKRUPTCY                                 0.00
                 NEBA                                       0.00
                                                     --------------
                 GRAND TOTAL                                0.00




-------------------------------------------------------------------------------
    PF1= HELP      PF3= PREV SCREEN       PF5= MAIN MENU        PF12= END
                            ENTER= NEXT SCREEN
```

SF 1166 Information - Miscellaneous Payments

DESCRIPTION AND EXECUTION

The SF 1166 Chain option displays the screens that contain the online SF 1166 vouchering information.

Steps to Reach SF 1166 Chain

1. At the Main Menu, select **2** - Payroll.
2. At the Payroll Main Menu, select **4** - Vouchering.
3. At the Vouchering Main Menu, select **2** - SF 1166 Chain.

4.2.2.6.3 Register Totals

```
COMMAND: ________                    NPPS
NAO1550                   PAYROLL REGISTER - QREG       1 OF 3
PAY BLOCK: __ OR SSN: ___ __ ____ NAME: ______________________ ____________ _

    ADD:                      ADD: NET + DED            ADD: NET + DED
 BASIC PAY                  NET EARN                  FEHB
 OVERTIME                   ADV PAY                   FERS
 NITE DIF                   BANKRUPTCY                FERS MIL
 HOL WKD                    BONDS                     FICA
 LUMP SUM                   CFC                       INDEBT US
 UNUS CT PD                 CHILD SUPP                HIT
 SUN DIF                    C GARNISH                 MISC
 HAZARD                     CIV SV CR                 NEBA
 FOREN-DIF                  CITY TAX                  STATE TAX
 SUPER DIFF                 COUNTY TAX                TSP
 RET ALLOW                  CSRS                      TSP LOAN
 STAFF DIFF                 CSRS MIL                  UNION
 AUO/AVAIL                  FED TAX                   VOL ALLOT
 PCA                        FEGLI
 LOCAL PAY                  LTC                        SUB TOT
-------------------------------------------------------------------------------
 PF1= HELP          PF3= PREV SCREEN     PF5= MAIN MENU       PF7= BACKWARD
 PF8= FORWARD       PF9= NAME SEARCH     PF12= END
```

Payroll Register - QREG (Page 1)

```
COMMAND: ________                    NPPS
NAO1550                   PAYROLL REGISTER - QREG       2 OF 3
PAY BLOCK: __ OR SSN: ___ __ ____ NAME: ______________________ ____________ _

                              ADD: ADJUSTMENTS           LESS: REFUNDS/CREDIT
 BASIC ADJ                    (-)                        (+)
 OT ADJ                     BILL OF CO                BOND REF
 NITE ADJ                   CFC                       CFC
 HOL WKD AD                 CITY TAX                  CITY TAX
 SUN ADJ                    CIV SV CR                 CIV SV CR
 HAZ ADJ                    CNTY TAX                  CNTY TAX
 FIR PR ADJ                 COLA                      COLA
 FOR DF ADJ                 CSRS                      CSRS
 SUP DF ADJ                 EIC                       EIC
 RET AL ADJ                 FED TAX                   FED TAX
 STF DF ADJ                 FEGLI                     FEGLI
 AUO    ADJ                 FEHB                      FEHB
 LOCAL  ADJ                 FERS                      FERS
                            FICA                      FICA
-------------------------------------------------------------------------------
 PF1= HELP          PF3= PREV SCREEN     PF5= MAIN MENU       PF7= BACKWARD
 PF8= FORWARD       PF9= NAME SEARCH     PF12= END
```

Payroll Register - QREG (Page 2)

```
COMMAND: ________                    NPPS
NAO1550                   PAYROLL REGISTER - QREG       3 OF 3
PAY BLOCK: __ OR SSN: ___ __ ____ NAME: ______________________ ____________ _

                              ADD: ADJUSTMENTS           LESS: REFUNDS/CREDIT
                              (-)                        (+)
                           HIT                        HIT
                           ST TAX                     ST TAX
                           TSP ADJ                    TSP ADJ
                           TSP LOAN                   TSP LOAN
                           UNION DUES                 UNION DUES
                           ADV PAY                    ADV PAY
   SUB TOT                    SUB TOT                    SUB TOT
 LESS:S CUT                                              LESS:
   TOT ERN                                            EIC AMT(+)
                                                      COLA   (+)

   TOT ERN                                               TOT ERN

-------------------------------------------------------------------------------
 PF1= HELP          PF3= PREV SCREEN     PF5= MAIN MENU       PF7= BACKWARD
 PF8= FORWARD       PF9= NAME SEARCH     PF12= END
```

Payroll Register - QREG (Page 3)

DESCRIPTION AND EXECUTION

The Payroll Register (QREG) template is used to retrieve and display payroll register summary information for an individual employee, single payblock, or for the entire center.

Steps to Reach Payroll Register

1. At the Main Menu, select **2** - Payroll.
2. At the Payroll Main Menu, select **4** - Vouchering.
3. At the Vouchering Main Menu, select **3** - Register Totals.

This template is composed of three screens. You may move forward by pressing **PF8** and backward by pressing **PF7**.

CPO Center

When Payroll Register screen is accessed using CPO USER-ID, CPO User can retrieve and display payroll register summary information for an individual employee, single payblock, the Center, or NASA Agency using Pay Block 98.

4.2.2.6.4 Accounting Breakouts

```
COMMAND: ________                NPPS
NAO4950              ACCOUNTING INFORMATION - ACCTBRK  (1 OF 3)
-------------------------------------------------------------------------------

 NET PAY TO EMPLOYEES            00.00  BANKRUPTCY                      00.00
 FEDERAL INCOME TAX              00.00  BILL FOR COLLECTION             00.00
 FICA EMPLOYEES                  00.00  MISC DEDUCTIONS                 00.00
 FICA EMPLOYERS                  00.00  STATE TAX                       00.00
 HIT EMPLOYEES                   00.00  COUNTY TAX                      00.00
 HIT EMPLOYERS                   00.00  CITY TAX                        00.00
 NEBA INSURANCE                  00.00  SAVINGS BONDS(REFUND)           00.00
 COMBINED FEDERAL CAMP.          00.00  ADVANCED PAY DEDUCTIONS         00.00
 UNION DUES                      00.00  LTC                             00.00
 CHILD SUPPORT                   00.00  FSA HC                          00.00
 INDEBTEDNESS DUE U.S.           00.00  FSA DC                          00.00
 COMMERCIAL GARNISHMENTS         00.00

-------------------------------------------------------------------------------
     PF1= HELP       PF3= PREVIOUS        PF5 = MAIN MENU         PF12 = END
                            ENTER= NEXT SCREEN
```

Accounting Information - ACCTBRK (Page 1)

```
COMMAND: ________                NPPS
NAO4950              ACCOUNTING INFORMATION - ACCTBRK  (2 OF 3)
-------------------------------------------------------------------------------


TSP (THRIFT SAVINGS PLAN)                FEGLI (EMPLOYEES)               97.86
    CSRS                          00.00     BASIC               68.66
    FERS (EMPLOYEES)              00.00     OPTION A            07.00
    FERS GOV'T BASIC              22.07     OPTION B            17.60
    FERS GOV'T MATCHING           00.00     OPTION C            04.60
                                            FEGLI (EMPLOYERS)               34.34

 FEHB EMPLOYEES                  228.99
 FEHB EMPLOYERS                  489.16
 FEHB CASH COLLECTION             00.00
 FEHB SPOUSAL PAYMENT             00.00



-------------------------------------------------------------------------------
      PF1 = HELP     PF3 = PREVIOUS      PF5 = MAIN MENU      PF12 = END
```

Accounting Information - ACCTBRK (Page 2)

```
COMMAND: ________                NPPS
NAO4950              ACCOUNTING INFORMATION - ACCTBRK  (3 OF 3)
--------------------------------------------------------------------------------
 CSRS: RETIRE TOTAL - EMPL                  1,023.23
       RETIRE TOTAL - EMPR                  1,123.23
         SALARY OFFSET REEMPLD ANNUIT                        100.00
         MILITARY SERVICE DEPOSIT                             00.00
         CIVILIAN SERVICE CREDIT                              00.00
 FERS: RETIRE TOTAL - EMPL                     69.44
       RETIRE TOTAL - EMPR                    329.43
         REGULAR - K EMPL                                      14.80
         REGULAR - K EMPR                                     238.70
         MIL RES TECH - N EMPL                                00.00
         MIL RES TECH - N EMPR                                00.00
         SPECIAL - M EMPL                                     04.64
         SPECIAL - M EMPR                                     90.73
         SALARY OFFSET REEMPLD ANNUIT                         00.00
         MILITARY SERVICE DEPOSIT                             50.00

 TOTAL RETIREMENT - CSRS/FERS               2,545.33
--------------------------------------------------------------------------------
      PF1 = HELP     PF3 = PREVIOUS      PF5 = MAIN MENU      PF12 = END
```

Accounting Information - ACCTBRK (Page 3)

DESCRIPTION AND EXECUTION

The Accounting Information (ACCTBRK) template is used to display the accounting information for vouchering purposes.

<u>Steps to Reach Accounting Information (Breakouts)</u>

1. At the Main Menu, select **2** - Payroll.
2. At the Payroll Main Menu, select **4** - Vouchering.
3. At the Vouchering Main select **4** - Accounting Breakouts

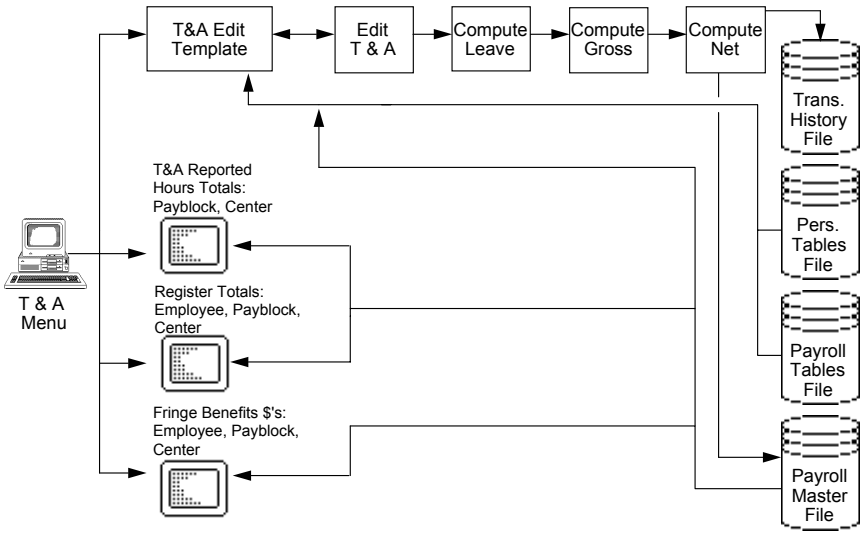

Figure 4.2.2.1-1 T&A Processing

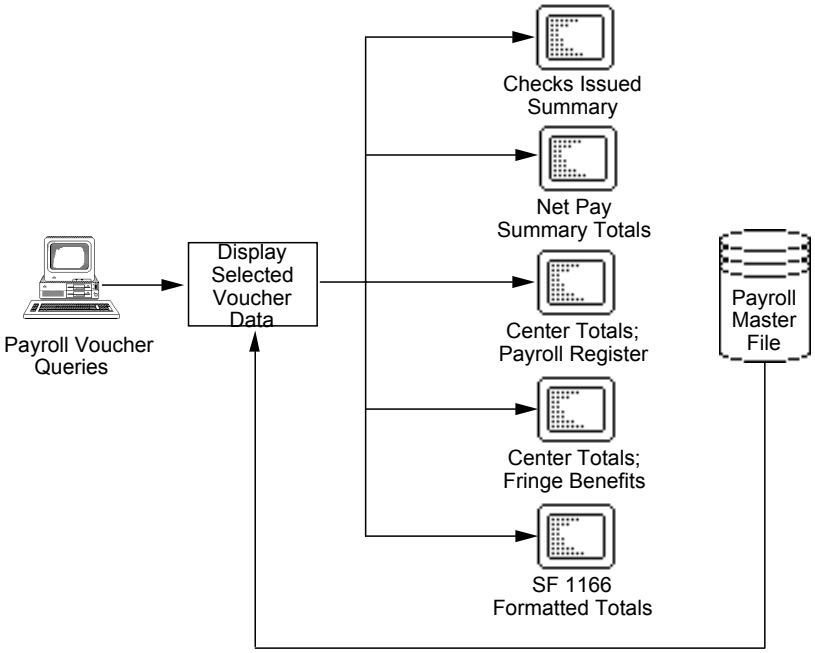

Figure 4.2.2.2-1 Vouchering

4.2.3 Payroll Table Processing

```
COMMAND: ________                N P P S
NAO0000                  PAYROLL MAIN MENU - MMPAY
--------------------------------------------------------------------------------
                    CENTER ID:        NPPS VERSION:
                    ENTER ONE OF THE FOLLOWING SELECTIONS: _

                           1 - TIME & ATTENDANCE

                           2 - MER

                           3 - TABLE PROCESSING

                           4 - VOUCHERING

                           5 - NON-PERSONNEL ACTION CASH AWARDS
--------------------------------------------------------------------------------
 PF1= HELP                  PF5= MAIN MENU                     PF12= END
```

Payroll Main Menu (MMPAY)

DESCRIPTION AND EXECUTION

The Payroll table processing operations are accessed through the Payroll Main Menu (MMPAY). Payroll table processing (illustrated in Figure 4.2.3-1, Payroll Tables) enables you to select and modify the payroll tables.

Steps to Reach Table Processing

1. At the Main Menu, select **2** - Payroll.
2. At the Payroll Main Menu, select **3** - Table Processing.

Throughout the Payroll Table Processing section, special sets of function and PF keys will be available. Though not every function and PF key appears on all screens, the following list is provided so that you may become familiar with them.

Use of Functions

A=Add	Allows you to add a new entry to the table you select.
B=Browse	Allows you to view multiple entries on the same screen.
C=Change	Allows you to change an existing table entry.
D=Delete	Allows you to delete an existing table entry.
N=Next	Allows you to view the next table entry.
R=Retrieve	Allows you to retrieve information on an existing table entry.

Use of PF Keys

Four standard PF keys appear on most menus and templates: PF1=Help, PF3=Previous Screen, PF5=Main Menu, and PF12=End.

4.2.3.1 Payroll Tables Menu

```
COMMAND: ________                    NPPS
NAO2000                  PAYROLL TABLES MENU - PAYTAB
-------------------------------------------------------------------------------
                          TABLE RELEASE:


                     ENTER ONE OF THE FOLLOWING SELECTIONS

                          1  CORE TABLES MAINTENANCE

                          2  LOCAL TABLES MAINTENANCE


                                SELECTION: _




-------------------------------------------------------------------------------
 PF1= HELP                  PF5= MAIN MENU                    PF12= END
```

Payroll Tables Menu (PAYTAB)

DESCRIPTION AND EXECUTION

The Payroll Tables Menu (PAYTAB) is used to maintain payroll tables. This menu offers two selections.

1. Core Tables Maintenance: Select a payroll core table for viewing or updating.
2. Local Tables Maintenance: Select a payroll local table for viewing or updating.

<u>Steps to Reach Payroll Tables Menu</u>

1. At the Main Menu, select **2** - Payroll.
2. At the payroll Main Menu, select **3** - Table Processing.

4.2.3.1.1 Payroll Core Tables Menu

```
* NO MORE TABLE IDS TO DISPLAY (TO REPEAT THE LIST, HIT ENTER)

COMMAND: ________                    NPPS
NAO2001               PAYROLL CORE TABLES MENU - PAYCORE

  TABLE         TABLE                        TABLE         TABLE
   ID        DESCRIPTION                      ID        DESCRIPTION
 --------    ------------------           --------     ------------------

 TBOND       BOND TABLE                   TCASE        ICB AWRDS INST TBL
 TEIC        EARNED INCOME CRED           THAZARD      HAZARDOUS CODE TBL
 THOLIDAY    PAYPERIOD HOLIDAYS           TICBCAT      TYPE OF AWRD INDIC
 TLIFE       LIFE INSURANCE               TLIMIT       MISC. LIMITS
 TMAX        GROSS/OT LIMITS              TMILINT      MILITARY DEP. INT.
 TNEBA       NEBA LIFE                    TNEBATRV     NEBA TRAVEL INSURA
 TPREM       PREMIUM RATES                TRETIR       RETIREMENT RATES
 TSEA        SENIOR EXEC ASSOC            TSTATE       STATE/COUNTRY CODE
 TTAX        FEDERAL/STATE TAX


ENTER THE TABLE ID OF THE TABLE YOU WISH TO PROCESS ==>  ________

-------------------------------------------------------------------------------
 PF1= HELP           PF3= PREV SCREEN   PF5= MAIN MENU        PF12= END
```

Payroll Core Tables Menu (PAYCORE)

DESCRIPTION AND EXECUTION

The Payroll Core Tables Menu (PAYCORE) is used to select a payroll core table to be viewed or updated. The menu lists both the table ID and description for all payroll tables available. Once a table has been selected from the list, the table ID should be typed in the indicated blank. NPPS then displays the requested table one entry at a time. The table may be viewed one entry at a time, a new entry may be added, an existing entry may be changed, or an existing entry may be deleted. Also, if the browse function is available in the list of screen functions, you may select it to view multiple table entries on single screen.

<u>Steps to Reach Payroll Core Tables Menu</u>

1. At the Main Menu, select **2** - Payroll.
2. At the Payroll Main Menu, select **3** - Table Processing.
3. At the Payroll Tables Menu, select **1** - Core Tables Maintenance.
4. At the Payroll Tables Menu, enter the name of the table you want to view or update.

4.2.3.1.2 Payroll Local Tables Menu

```
* NO MORE TABLE IDS TO DISPLAY (TO REPEAT THE LIST, HIT ENTER)

COMMAND: ________                    NPPS
NAO2002              PAYROLL LOCAL TABLES MENU - PAYLOCAL

  TABLE         TABLE                        TABLE         TABLE
   ID        DESCRIPTION                      ID        DESCRIPTION
 --------    ------------------           --------     ------------------

 TCFC        COMBINED FEDERAL             TEMPRID      STATE EMPLOYER ID
 TFIN        FINANCIAL INSTITUT           TUNION       EMPLOYEE UNION









ENTER THE TABLE ID OF THE TABLE YOU WISH TO PROCESS ==>  ________

--------------------------------------------------------------------------------
 PF1= HELP           PF3= PREV SCREEN   PF5= MAIN MENU        PF12= END
```

Payroll Local Tables Menu (PAYLOCAL)

DESCRIPTION AND EXECUTION

The Payroll Local Tables Menu (PAYLOCAL) is used to select a payroll local table to be viewed or updated. The menu lists both the table ID and description for all payroll tables available. Once a table has been selected from the list, the table ID should be typed in the indicated blank. NPPS then displays the requested table one entry at a time. The table may be viewed one entry at a time, a new entry may be added, an existing entry may be changed, or an existing entry may be deleted. Also, if the browse function is available in the list of screen functions, you may select it to view multiple table entries on single screen.

<u>Steps to Reach Payroll Local Tables Menu</u>

1. At the Main Menu, select **2** - Payroll.
2. At the Payroll Main Menu, select **3** - Table Processing.
3. At the Payroll Tables Menu, select **2** - Local Tables Maintenance.
4. At the Payroll Tables Menu, enter the name of the table you want to view or update.

USER INPUT

There are two types of payroll tables; Core tables and Local tables. The Core tables are developed and maintained centrally by the NPPS Development Team. The Local tables are populated and maintained locally by each receiving installation. The following is a list of all the local tables.

TCFC	Combined Federal Campaign	NPPS uses this table to establish legal CFC organizations and address information for those organizations.
TFIN	Financial Institutions	NPPS uses this table to establish the identification and address data for employee net pay dispositions and allotments for electronic funds transfers and checks sent to financial institutions.
TUNION	Union Code	NPPS uses this table to establish the current active unions for the installation.
TEMPRID	State Employer ID	NPPS uses this table to print the employers ID associated with a state code on an employee's W-2 (Core Report 418).

DESCRIPTION OF DATA PROCESSING RESULTS AND OUTPUT

The following is a four-screen example of the table maintenance process. The first screen shows the selection of the State/Country code using the ID TSTATE.

```
* NO MORE TABLE IDS TO DISPLAY (TO REPEAT THE LIST, HIT ENTER)

COMMAND: ________                    NPPS
NAO2001                PAYROLL CORE TABLES MENU - PAYCORE

  TABLE         TABLE                        TABLE         TABLE
   ID        DESCRIPTION                      ID        DESCRIPTION
 --------    ------------------           --------     ------------------

 TBOND       BOND TABLE                   TCASE        ICB AWRDS INST TBL
 TEIC        EARNED INCOME CRED           THAZARD      HAZARDOUS CODE TBL
 THOLIDAY    PAYPERIOD HOLIDAYS           TICBCAT      TYPE OF AWRD INDIC
 TLIFE       LIFE INSURANCE               TLIMIT       MISC. LIMITS
 TMAX        GROSS/OT LIMITS              TMILINT      MILITARY DEP. INT.
 TNEBA       NEBA LIFE                    TNEBATRV     NEBA TRAVEL INSURA
 TPREM       PREMIUM RATES                TRETIR       RETIREMENT RATES
 TSEA        SENIOR EXEC ASSOC            TSTATE       STATE/COUNTRY CODE
 TTAX        FEDERAL/STATE TAX


ENTER THE TABLE ID OF THE TABLE YOU WISH TO PROCESS ==>  __TSTATE_

-------------------------------------------------------------------------------
 PF1= HELP           PF3= PREV SCREEN   PF5= MAIN MENU        PF12= END
```

Payroll Tables Menu with TSTATE

The next screen shows the first entry for this table. Notice that the function has been changed to "B" for Browse.

```
COMMAND: ________                    NPPS
NAO2060                 STATE/COUNTRY CODE TABLE - TSTATE                    2
-------------------------------------------------------------------------------

      FUNCTION: B




                 STATE/COUNTRY CODE:  AK_

                 STATE/COUNTRY NAME:  ALASKA____________




-------------------------------------------------------------------------------
FUNCTIONS:   A= ADD   B= BROWSE   C= CHANGE   D= DELETE   N= NEXT   R= RETRIEVE
 PF1= HELP           PF3= PREV SCREEN   PF5= MAIN MENU        PF12= END
```

State/Country Code

The third screen shows the use of the browse function to display a list of multiple table entries. Notice that the table entry "California" has been marked with an "X" to indicate it is the record to be changed.

```
* TO CHANGE A RECORD, PLACE AN 'X' ON THAT LINE AND HIT ENTER
COMMAND: ________                    NPPS
NAO2060B                 STATE/COUNTRY TABLE BROWSE
-------------------------------------------------------------------------------

     BEGINNING STATE/COUNTRY CODE: CA_

SEL     STATE/COUNTRY   STATE/COUNTRY NAME
           CODE
 _         AK           ALASKA

 _         AL           ALABAMA

 _         AR           ARKANSAS

 _         AZ           ARIZONA

 X         CA           CALIFORNIA


-------------------------------------------------------------------------------
 PF1= HELP           PF3= PREV SCREEN   PF5= MAIN MENU PF7= BACKWARD
 PF8= FORWARD        PF12= END
```

Browse State/Country Code

The final screen displays the "California" entry for the State/Country Code table. In addition, NPPS automatically set the function to "C" for Change.

```
COMMAND: ________                    NPPS
NAO2060                 STATE/COUNTRY CODE TABLE - TSTATE
-------------------------------------------------------------------------------



      FUNCTION: C


                 STATE/COUNTRY CODE:  CA_


                 STATE/COUNTRY NAME:  CALIFORNIA________




-------------------------------------------------------------------------------
FUNCTIONS:   A= ADD   B= BROWSE   C= CHANGE   D= DELETE   N= NEXT   R= RETRIEVE
 PF1= HELP           PF3= PREV SCREEN   PF5= MAIN MENU        PF12= END
```

Change State/Country Name

4.2.4 Non-personnel Action Cash Awards Processing

```
COMMAND: ________                N P P S
NAO7000      NON-PERSONNEL ACTION CASH AWARDS MAIN MENU - CASHMENU
--------------------------------------------------------------------------------



                  ENTER ONE OF THE FOLLOWING SELECTIONS: _


                           1 - CASH AWARDS

                           2 - MASS CASH AWARDS

                           3 - CASH AWARDS QUERY




--------------------------------------------------------------------------------
 PF1= HELP           PF3= PREV SCREEN   PF5= MAIN MENU        PF12= END
```

Non-personnel Action Cash Awards Main Menu (CASHMENU)

DESCRIPTION AND EXECUTION

The non-personnel action cash awards processing operations are accessed through the Payroll Main Menu (MMPAY). This cash awards processing enables you to enter and adjust non-personnel action cash award payment transactions for NASA employees and non-NASA government and non-government employees in the current pay period.

Steps to Reach Non-personnel Action Cash Awards Main Menu

1. At the Main Menu, select **2** - Payroll.
2. At the Payroll Main Menu, select **5** - Non-personnel Action Cash Awards.

4.2.4.1 Cash Awards Processing

```
COMMAND: ________                    NPPS
NAO7110          NON-PERSONNEL ACTION CASH AWARDS - CASHPAY
--------------------------------------------------------------------------------

     SSN      PAYBLK   FUNC       LAST NAME             FIRST NAME     I   SUF
 ___ __ ____            R     ______________________   ____________   _   ___

 AWARD PAYMENT DATE: ________         AWARD TYPE: _         PR NO: __ _____
 CASE NO: __ ______            ICB CATEGORY: _       GROSS AMOUNT: _________
                                                     ADJUSTED AMT:

 GOV/NON: _    STATE TAX CD: __     CITY TAX CD: ___      OASDI: _    HIT: _
 (G OR N)                                                     (Y OR BLANK)

 ADDRESS:  ___________________________________
           __________________________
 CITY:     ________________           STATE/COUNTRY:  ___  ZIP:  _____ - ____

 DUTY STATUS:     INSTALLATION:
--------------------------------------------------------------------------------
FUNCTIONS:   A= ADD      C= CHANGE       N= NAME SEARCH        R= RETRIEVE
 PF1= HELP       PF3= PREV SCREEN        PF5= MAIN MENU        PF12= END
```

Non-personnel Action Cash Awards (CASHPAY)

DESCRIPTION AND EXECUTION

The Non-personnel Action Cash Awards (CASHPAY) template is used to add, retrieve, and change name, address, and awards payment information for a non-personnel action award.

<u>Steps to Reach Non-personnel Action Cash Awards</u>

1. At the Main Menu, select **2** - Payroll.
2. At the Payroll Main Menu, select **5** - Non-personnel Action Cash Awards.
3. At the Non-personnel Action Cash Awards Main Menu, select **1** - Cash Awards.

If you know the award recipient is on the payroll master file or has already received an award through the Non-personnel Action Cash Awards process, you only have to enter the Award Payment Date, Award Type, Case No, and ICB Category. The rest of the data on the screen will be loaded automatically. When you retrieve by SSN only, Award Payment Date will always be pre-loaded along with the display of name and address.

NPPS calculates federal, state, and city tax as well as FICA, HIT, and the net amount appropriately when you enter Gov/Non, State Tax Cd, City Cd, OASDI, and HIT fields. NPPS will update earnings and deductions accumulations for employees at your installation when you add or change a non-personnel action cash award.

4.2.4.2 Mass Cash Awards Processing

```
COMMAND: ________                    NPPS
NAO7120   NON-PERSONNEL ACTION MASS CASH AWARDS - MASSCASH    1 OF 10
--------------------------------------------------------------------------------
    SSN         FUNCTION          LAST NAME            FIRST NAME     I   SUF
 ___ __ ____       R          ______________________    ____________   _
   AWARD PAY DATE:      FROM  ________   TO  ________

   ACT    PAY DATE    TYPE    ICB CAT      PR #        CASE #        AMOUNT
    _
    _
    _
    _
    _
    _
    _
    _
    _
    _
--------------------------------------------------------------------------------
FUNCTIONS:   C= CHANGE          N= NAME SEARCH          R= RETRIEVE
      ACT:   X= CANCEL    M= MODIFY                                PF1= HELP
 PF3= PREV SCREEN   PF5= MAIN MENU   PF7= BACKWARD   PF8= FORWARD   PF12= END
```

Non-personnel Action Mass Cash Awards (MASSCASH)

DESCRIPTION AND EXECUTION

The Non-personnel Action Mass Cash Awards (MASSCASH) template is used to display up to 100 awards at a time for a specified individual. It also provides the capability to cancel or navigate to the Non-personnel Action Cash Awards (CASHPAY) template for update on any selected award. Only one award will be processed at a time depending on the action selected (i.e., either entering **X** in the Act field to cancel or **M** to modify an award). When "M" is entered in the Act field, you will be taken to the CASHPAY template where the update process is performed.

<u>Steps to Reach Non-personnel Action Mass Cash Awards</u>

1. At the Main Menu, select **2** - Payroll.
2. At the Payroll Main Menu, select **5** - Non-personnel Action Cash Awards.
3. At the Non-personnel Action Cash Awards Main Menu, select **2** - Mass Cash Awards.

4.2.4.3 *Cash Awards Query*

```
COMMAND: ________                    NPPS
NAO7130         NON-PERSONNEL ACTION CASH AWARDS REGISTER - QCASH
-------------------------------------------------------------------------------

            GROSS       FED       STATE     CITY      FICA       HIT    AWD CNT

NON-ICB:

ICB AWDS:
 T
 P
 M
 R

TOTAL:

GRAND
TOTAL:
-------------------------------------------------------------------------------

 PF1= HELP         PF3= PREV SCREEN         PF5= MAIN MENU         PF12= END
```

Non-personnel Action Cash Awards Register (QCASH)

DESCRIPTION AND EXECUTION

The Non-personnel Action Cash Awards Register (QCASH) template is used to display the totals and grand totals of awards and dollar amounts for NASA, non-NASA government, and non-government employees effective for the current pay period.

<u>Steps to Reach Non-personnel Action Cash Awards Register</u>

1. At the Main Menu, select **2** - Payroll.
2. At the Payroll Main Menu, select **5** - Non-personnel Action Cash Awards.
3. At the Non-personnel Action Cash Awards Main Menu, select **3** - Cash Awards Query.

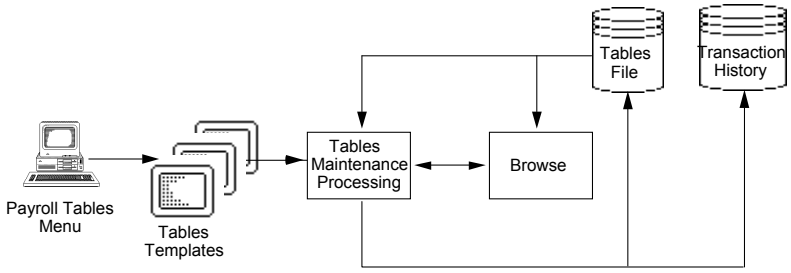

Figure 4.2.3-1 Payroll Tables

4.3 Application Administration

The Application Administration function for NPPS includes five operations.

- Security Maintenance
- Command and Relational Table Maintenance
- Processing Controls
- Help Maintenance
- Ad Hoc Reporting (SUPER NATURAL)

Some of these operations are accessed through the Application Administration subsystem of NPPS (e.g., security maintenance, command and relational table maintenance, and processing controls). Help maintenance as an operation may be performed from any help screen in the entire NPPS help facility. Ad Hoc Reporting using SUPER NATURAL may be accessed only from the NPPS Main Menu.

The professionals who perform these operations are referred to as Application Administrators. Some have expertise in personnel; others have expertise in payroll. Typically, Application Administrators are responsible, directly or indirectly, for inputting data into NPPS to maintain current employee records and extract data from NPPS for batch reporting and/or payroll purposes. Application Administrators perform the five previously listed vital functions which create a link between their functions as users of NPPS and the system operators and database administrators.

4.3.1 Application Administration Menu

```
COMMAND: ________                N P P S
NPO0100                APPLICATION  ADMINISTRATION - ADMMENU
--------------------------------------------------------------------------------
               CENTER ID:         NPPS VERSION:

                 ENTER ONE OF THE FOLLOWING SELECTIONS:


                             1 - SECURITY MAINTENANCE

                             2 - MAINTENANCE UTILITIES

                             3 - PROCESSING CONTROLS

                             4 - JOB SCHEDULER

                SELECTION   _


--------------------------------------------------------------------------------
 PF1= HELP                   PF5= MAIN MENU                    PF12= END
```

Application Administration (ADMMENU)

DESCRIPTION AND EXECUTION

The Application Administration (ADMMENU) menu is used to select one of the four operations required to administer NPPS. These tasks are performed by select personnel and payroll professionals at each installation and at the CPO level.

This section of the UOG describes Security Maintenance (option 1) and Processing Controls (option 3). Most of Maintenance Utilities (option 2) discusses batch job maintenance, which is described in Section 5.0, Batch User Capability. However, the portion of Maintenance Utilities which enables you to view and update the command and relational tables is described in this section. Job Scheduler (option 4) enables you to schedule a batch job which has been predefined by the batch job maintenance utilities. Batch job scheduling is also described in Section 5.0.

<u>Step to Reach Application Administration</u>

1. At the Main Menu, select **3** - Application Administration.

Throughout the Application Administration subsystem, special sets of function and PF keys will be available to you. These functions and PF keys will be defined in each operation. Four standard PF keys appear on most menus and templates: PF1=Help, PF3=Previous Screen, PF5=Main Menu, and PF12=End. Two additional keys, PF7=Backward and PF8=Forward, allow you to move between the pages of a template composed of more than one screen.

4.3.1.1 Security Maintenance

```
COMMAND: ________          NPPS SECURITY MAINTENANCE
NPO1000                           SECURE
-------------------------------------------------------------------------------



              NPPS USERID: ________       FUNCTION: _

                     NAME: _____________   SSN: ___ __ ____

                     INSTALLATION:

                     INSTALLATION NAME:



-------------------------------------------------------------------------------
       FUNCTIONS:    A= ADD    C= CHANGE    R= REVIEW    D= DELETE
 PF1= HELP           PF2= RESET PASSWORD  PF3= PREV SCREEN   PF5= MAIN MENU
 PF9= COPY SECURITY  PF12= END
```

Security Maintenance (SECURE)

DESCRIPTION AND EXECUTION

The Security Maintenance (SECURE) template is used by the Security Administrator to set up and maintain the NPPS security profiles for all individuals who use NPPS, as illustrated in Figure 4.3.1.1-1. A Payroll Administrator establishes and maintains security profiles for members of payroll; a Personnel Administrator establishes and maintains security profiles for members of personnel. The NPPS Master Administrator establishes and maintains security profiles for other Security Administrators. Your security profile tells NPPS which subsystems you may access and what tasks you are authorized to perform. You may enter the security section and view only your own security profile without special Security Administrator permissions.

The Consolidated Payroll Office (CPO) Security Administrator maintains the security profiles to process Payroll for each Center. A security profile set up by the CPO User is automatically copied to access to all NASA Centers listed in NPPS Core Table TINSTAL1. CPO User security profile cannot differ between Centers.

<u>Steps to Reach Security Maintenance</u>

1. At the Main Menu, select **3** - Application Administration.
2. At the Application Administration Menu, select **1** - Security Maintenance

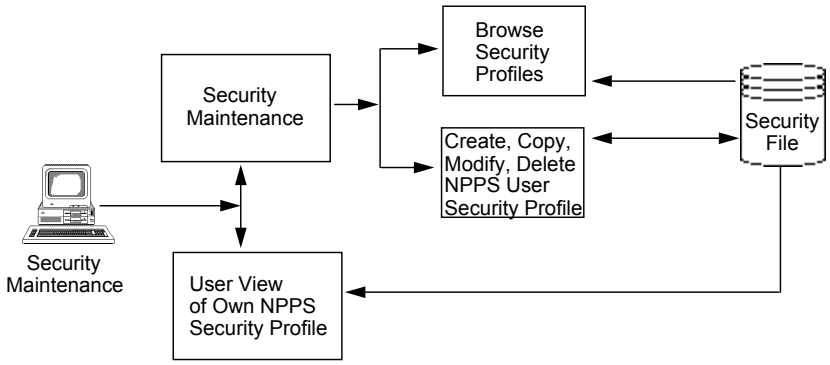

Figure 4.3.1.1-1 Security Maintenance

Use of Functions

A=Add	Allows a Security Administrator to add a new profile.
C=Change	Allows a Security Administrator to change an existing profile.
R=Review	Allows a Security Administrator to view an existing profile. This function also allows any individual to view his/her own profile.
D=Delete	Allows a Security Administrator to delete an unwanted profile, such as a separated employee.
L=List	Allows a Security Administrator to list the name, SSN, and user-id for each of the security profiles the administrator may maintain. This function is only available from the Security Administrator Permissions template.

Use of PF Keys

PF2=Reset Password - Enables a Security Administrator viewing the Security Maintenance template to reset a user's password.

PF4=Securfun - Allows a Security Administrator viewing the Security Profiles listing to proceed to the Functional Security Permissions template rather than return to the Security Administrator Permissions template.

PF9=Copy Security - Enables a Security Administrator viewing the Security Maintenance template to copy an existing profile, creating two identical profiles for two different system users. PF9 (Copy Security) causes NPPS to display the Security Copy template. The Security Administrator may then enter the name of the user-id for the original profile, and the user-id, name, and SSN for the user to receive the second and identical profile.

When signed-on as a CPO User, a PF9 will copy a security profile to another CPO User only if the new User's USER-ID begins with the specific CPO-ID.

DESCRIPTION OF DATA PROCESSING RESULTS AND OUTPUT

In order to add, review, change, or copy a profile, you must access and utilize multiple security maintenance templates. Following are the names and descriptions of the six security templates.

Security Menu	Allows the entry of the user-id whose profile is to be added or modified according to the function specified.
Security Copy	Allows a Security Administrator to copy an existing profile, creating two identical profiles for two different system users.
Security Administrator	Allows the review, creation, or maintenance of a Security Administrator profile.
Permissions	Allows a Security Administrator to view a listing of the names and user-ids of the profiles the administrator may maintain. This listing may only be requested of the Security Administrator Permissions template.
Security Functional Level	Allows the review and maintenance of functional level authorizations for a specified profile.
Security Detail Permission	Allows the review and maintenance of detail level authorizations for a specified profile.

The following screen displays a request to review a profile. In this example, the individual who is assigned this profile is a Security Administrator. Therefore, the Security Administrator Permissions template may be viewed.

```
COMMAND: ________          NPPS SECURITY MAINTENANCE
NPO1000                          SECURE
-------------------------------------------------------------------------------




              NPPS USERID: ________       FUNCTION: _

                     NAME: ____________   SSN: ___ __ ____

                     INSTALLATION:

                     INSTALLATION NAME:



-------------------------------------------------------------------------------
       FUNCTIONS:    A= ADD    C= CHANGE    R= REVIEW    D= DELETE
 PF1= HELP           PF2= RESET PASSWORD  PF3= PREV SCREEN   PF5= MAIN MENU
 PF9= COPY SECURITY  PF12= END
```

Security Maintenance (SECURE)

Establishing a given security profile requires entries on one or more of the three types of Security Permission templates: (1) Functional Security Permissions, (2) Detail Level Permissions, and (3) Administrator Permissions.

Functional	Every profile must have entries on the Functional Security Permissions template. This is the screen that designates Permissions for the major NPPS processes; master employee record updates, personnel actions, etc.
Detail	A given security profile may require entries on one or more Level Detail Level Permission template(s). The major processes Permissions which are subdivided into detail levels of permission are identified by a "D" to the right of the function name. For example, both Personnel and Payroll Table Maintenance display a "D" meaning that a given profile may have permission to review and/or update certain tables, but have no access to other tables.
Administrator	If the security profile is that of a System Administrator, the Permissions profile must also include entries on the Administrator Permissions template.

Throughout the security permission templates, three codes are used to designate the level of permission for a given function: Blank = No Access, R = Review and U = Update.

Blank	User may not view any part of the function.
Review	User may view all portions of the function, but may not change any data.
Update	User may view all portions of the function and update data.

In addition, the code "X" is used to assign individual authority at a template level within a selected functional area. The "X" may be entered for only those functions designated by "D." Detail permission means the individual may view and/or update specific items within the function.

The next few pages illustrate an example security profile. This illustration is provided to further clarify the major three types of templates that may compose a Security Profile.

```
COMMAND: ________                NPPS SECURITY
NPO1100                  ADMINISTRATOR PERMISSIONS - SECURADM
-------------------------------------------------------------------------------

 NPPS USERID: NPSNEW__  FUNCTION: R  NAME: KATE JOHNSON  SSN: 444 44 4444


                PAYROLL     PERSONNEL    APPLICATIONS


                   U             _              _



-------------------------------------------------------------------------------
   FUNCTIONS:   C= CHANGE   R= REVIEW   L= LIST(ADMINISTRATOR ONLY)
 PERMISSIONS:   U= UPDATE   R= REVIEW   BLANK= NO ACCESS
 PF1= HELP           PF3= PREV SCREEN    PF5= MAIN MENU        PF12= END
```

Security Administrator Permissions (SECURADM)

On the Security Administrator Permissions (SECURADM) template, the code "U" (Update) in one or more of the three categories of administrator (payroll, personnel, and applications) identifies this profile as a Security Administrator. This means that the individual may add or update other profiles within the same center as the administrator himself. The code "R" (Review) means that the individual may review, but not add or update profiles for other individuals within the same center. If all three categories are left blank when the profile is added, the individual will not be able to update any profiles and he/she will only be able to view his/her own profile. After the profile is added, this template will only be displayed if it has not been left blank, i.e., if one or more of the categories contains a "U" (Update) or "R" (Review).

To see all NPPS user-ids, enter code **L**. The user must have administrator status to view this list.

```
COMMAND: ________                NPPS SECURITY
NPO1110                    SECURITY PROFILES-SECURLIST
---------------------------  INSTALLATION  9999 ------------------------------
     SSN          NAME      USERID        PAYROLL    PERSONNEL   APPLICATIONS
 111-11-1111  DAVE          DAVID                        Y            Y
 222-22-2222  DAVID         NPS1090          Y           Y            Y
 333-33-3333  SAM JONES     SAM                                       Y
 444-44-4444  TOM WILSON    TOM


 PF1= HELP            PF3= PREV SCREEN   PF4= SECURFUN         PF5= MAIN MENU
 PF7= BACKWARD        PF8= FORWARD       PF12= END
```

Password List

```
COMMAND: ________                  NPPS SECURITY
NPO1300           FUNCTIONAL SECURITY PERMISSIONS - SECURFUN
------------------------------------------------------------------------------
  NPPS PASSWORD: ________  FUNCTION: R  NAME: _______       SSN: ___ __ ____
--- PAYROLL ----- LEVEL --- PERSONNEL ---- LEVEL ----- APPLICATIONS -- LEVEL --
  PAYBLOCK ACCESS         PERSONNEL ACTIONS   U D    HELP MAINTENANCE     U
                          PLANNING ACTIONS    U      RELATIONAL TABLES    U D
 Y Y Y Y Y Y Y Y Y Y      MATURE PROCESS      U      PAYROLL CONTROLS     U
 1 2 3 4 5 6 7 8 9 10     SF-50 PROCESS       U      PERSONNEL CONTROLS   U
(BLANK = NONE, Y = YES)   TABLES MAINTENANCE  U D    NPPS COMMAND MAINT   U
                        ACI PROCESS             U      EXTERNAL COMMANDS    U D
TIME AND ATTENDANCE  U D  MASS ACTIONS        X D    BATCH JOB MAINT      U
MASTER EMPLOYEE REC  U D  SERVICE RECORD      U      BATCH JOB SCHEDULE   7
VOUCHERING           U    PERSONNEL HISTORY   U      BATCH JOB CATEGORY   3
TABLES MAINTENANCE   U D                              INSTALLATION TABLE   U
CASH AWARDS          U D                              SUBMIT STARTUP       7
                                                      SF52 DATA ACCESS     Y D
                                                      ERROR BYPASS         U
   FUNCTIONS:  C= CHANGE     R= REVIEW
 PERMISSIONS:  U= UPDATE     R= REVIEW     X= DETAIL     BLANK= NO ACCESS
 PF1= HELP   PF3= PREV SCREEN   PF4= SELECT DETAIL   PF5= MAIN MENU   PF12= END
```

Functional Security Permissions (SECURFUN)

All profiles must have one or more entries on the Functional Security Permissions (SECURFUN) template. The functions are divided into three categories: payroll, personnel, and applications. Typically, payroll clerks will have permission to access functions in only the payroll column and personnel clerks will have permission to access functions in only the personnel column. Supervisors will typically have permission to access functions in two or more columns.

Payroll functions include 10 payblocks and 5 major functions of which 4 possess detail levels of permission. Access to a payblock is indicated by "Y" for yes; blank means no access. Global access to one or more of the 5 major functions is indicated by "U" (Update) or "R" (Review) code in the corresponding blank. Detail level access may be defined by entering "X" in the corresponding blank. For more information on detail levels of permission, refer to the procedures for "Steps to Add a New Profile" in the latter part of this section.

There are 9 personnel functions. Global access to one or more of the 9 major functions is indicated by "U" (Update) or "R" (Review) code in the corresponding blank. Three of the 9 major functions have accompanying detail levels of permission. Detail level access may be defined by entering "X" in the corresponding blank. For more information on detail levels of permission, refer to the procedures for "Steps to Add a New Profile" in the latter part of this section.

There are 13 application functions. Each will be explained individually as they are unique to the NPPS application and therefore assumed to be unfamiliar to even the most experienced personnel or payroll professional.

APPLICATION FUNCTIONS

FUNCTION	EXPLANATION
Help Maintenance	This function enables authorized individuals at your installation to customize the help screens. The code "U" Update enables the individuals with this profile to add and update help screens. Since all individuals may view the accompanying help screens for all menus and templates which they are allowed to access, the "R" (Review) for review is not necessary and this function may be left blank unless update capability is required.
Relational Tables	Relational Tables Update enables authorized individuals to establish special edit parameters for personnel. Global access to this function is indicated by "U" (Update) or "R" (Review) code. This enables the individual to update or review all the Relational Edit Tables. Detail level access to specific tables may be defined by entering **X** in the corresponding blank. This enables the individuals to update and/or review only selected tables. For more information on detail levels of permission, refer to the procedures for "Steps to Add a New Profile" in the latter part of this section.
Payroll Controls	This function enables authorized individuals to update the payroll control data such as Personnel Mature Lock, Default Payblock for Accessions, and other information used in determining how and when to perform certain payroll processing. The code "U" (Update) enables the individual to update the information contained in this record. The code "R" (Review) enables the individual to review, but not change this information.

FUNCTION	EXPLANATION
Personnel Controls	This function enables authorized individuals to update the personnel data such as Human Resources Office ID, Mail Code and Organization, as well as other information used in determining report cut-off dates, trigger periodic reports, and trigger on-request reports. The code "U" (Update) enables the individual to update the information contained in this record. The code "R" (Review) enables the individual to review, but not change this information.
NPPS Command	This function enables authorized individuals to define new Maintenance commands or template IDs for use within the NPPS application. The code "U" (Update) enables the individual to update the information contained in this record. The code "R" (Review) enables the individual to review, but not change this information. In order to access this function, "U" (Update) or "R" (Review) must be entered in the Maintenance Utilities function.
External Commands	This function enables authorized individuals to define new commands for use with installation-unique user interface systems. Global access to this function is indicated by "U" (Update) or "R" (Review) code. This enables the individual to update or review all the External Commands. Detail level access may be defined by entering **X** in the corresponding blank. This enables the individuals to update and/or review only selected External Commands. For more information on detail levels of permission, refer to the procedures for "Steps to Add a New Profile" in the latter part of this section. In order to access this function, "U" (Update) or "R" (Review) must be entered in the Maintenance Utilities function.
Batch Maintenance	This function enables authorized individuals to create new batch jobs and update existing batch jobs. Access to this function is indicated by "U" (Update) or "R" (Review) code. This enables the individual to update or review all the functions which compose Batch Job Maintenance. In order to access this function, "U" (Update) or "R" (Review) must be entered in the Maintenance Utilities function.

FUNCTION	EXPLANATION
Batch Job Schedule	This function enables an authorized individual to schedule and evaluate the status of batch jobs. Access to this function is indicated by an "R" or the numbers 1 - 7. The "R" permission enables an authorized individual to view the list of batch jobs and the status of scheduled jobs, but not actually schedule a job. A numeric code will allow the user to schedule a job and alter the status of a scheduled job. The description of each numeric code is as follows. Code 1 Schedule Payroll jobs only Code 2 Schedule Personnel jobs only Code 3 Schedule Other jobs only Code 4 Schedule Payroll and Personnel jobs Code 5 Schedule Payroll and Other jobs Code 6 Schedule Personnel and Other jobs Code 7 Schedule any job R Review all jobs Blank No access
Batch Job Category	This function defines the type of batch jobs an individual may schedule, providing the individual has update (U) authority for Batch Job Schedule. There are three codes which represent the three batch job categories: 1 = Schedule process jobs only, 2 = schedule report jobs only, and 3 = schedule both process and report jobs.
Installation Table	This function enables authorized individuals to update the information for his/her own installation, such as installation name and location, NEBA check name and location, Federal Reserve Bank Name and location, and TSP contact name and phone number. Access to this function is indicated by "U" (Update) or "R" (Review) code. This enables the individual to update or review all the information regarding his/her installation.

FUNCTION	EXPLANATION
Submit Startup	This enables an authorized individual to pass the startup job to the Job Entry Subsystem (JES) for execution. This job checks the Batch Job Scheduler for jobs waiting to be executed and passes them one by one to JES. Startup will only pass jobs to JES that match the user's submit startup code. The description of the startup codes is as follows. Code 1 Startup Payroll jobs only Code 2 Startup Personnel jobs only Code 3 Startup Other jobs only Code 4 Startup Payroll and Personnel jobs Code 5 Startup Payroll and Other jobs Code 6 Startup Personnel and Other jobs Code 7 Startup any job Blank No access
SF52 Data Access	This option is only available for those who have first been given access to Update or Review SF52 Personnel Action Processing (PERACT52). This access is granted through Personnel Actions Detailed Permission Level (SECURFUN). This function limits an authorized individual's access to SF52 Personnel Data based on Organization: Assigned or Organization: Located. "Blank" indicates there is no limitation and all SF52 Personnel Action Data can be accessed. A code of "Y" is used to limit access to data to those Organization Codes listed on SF52 Data Access Detailed Permission Level screen
Error Bypass	This function enables an authorized individual to bypass the single and relational edits checks which are built into the personnel actions processing. This means that an action may be placed on the suspense file, and even matured, without passing the edit checks. The only (non-blank) code for this function is "U" (Update) which authorizes an individual to bypass the built-in edit checks while processing a personnel action.

The following screen represents a Detail Level Permissions template. This level is composed of 11 templates, each representing 1 of the 11 functional security items followed by "D" on the Functional Security Permissions template. A profile will have one or more entries on these templates if one or more of the functional security items is marked with "X." Typically, a single profile will have detailed level permissions for only one or two functional security items depending on the job requirements.

```
 * EXAMPLE SECURITY CHANGED. RETURN TO MAIN MENU TO INITIALIZE

 COMMAND: ________                NPPS SECURITY
 NPO1320                     DETAIL LEVEL PERMISSIONS -  SECURTAB
-------------------------------------------------------------------------------
NPPS USERID:    NPSNEW    FUNCTION: R   NAME: KATE JOHNSON  SSN: 300 33 44
PAYCORE   U   PAYLOCAL    U   PAYTAB     R   TBOND     R   TCASE     R TCFC  U
TEIC      U   TEMPRID     U   TFIN         U   THAZARD   U   THOLIDAY   R
TICBCAT   U   TLIFE       U   TLIMIT     U   TMAX      U   TMILINT    U TNEBA U
TNEBATRV  U   TPREM       U   TRETIR     R   TSEA      U   TSTATE     U TTAX  U
TUNION    U         _           _           _           _           _
       _           _           _           _           _           _
       _           _           _           _           _           _
       _           _           _           _           _           _
       _           _           _           _           _           _
       _           _           _           _           _           _
       _           _           _           _           _           _
       _           _           _           _           _           _
-------------------------------------------------------------------------------
  FUNCTIONS:    C= CHANGE       R= REVIEW
PERMISSIONS:    R= REVIEW          U= UPDATE       BLANK= NO ACCESS
  PF1= HELP     PF3= PREV SCREEN    PF7= BACKWARD     PF8= FORWARD     PF12= END
```

Detail Level Permissions (SECURTAB)

This specific Detail Level Permissions (SECURTAB) template is for the Payroll Tables Maintenance function. It lists the 24 individual payroll tables by their abbreviated title. To the right of each abbreviated table name is a blank which is used to indicate the access authority for that particular table. Table names followed by "U" (Update) may be viewed and the data they contain may be updated. Table names followed by "R" may be viewed only. Table names followed by a blank may not be viewed. All detail level permissions are granted in the same manner. For more information on detail levels of permission, refer to the procedures for "Steps to Add a New Profile" in the latter part of this section.

<u>Steps to Review a Profile</u>

1. At Security Maintenance, type the user-id of the profile to be reviewed.
1. Type **R** in the Function space.
3. Press **ENTER** to view the name, SSN, and installation of the profile.
4. Press **ENTER** to proceed to the Security Administrator Permissions template if you are reviewing the profile of a Security Administrator. If you are not reviewing the profile of a Security Administrator, you will proceed directly to the Functional Security Permissions template.

5. Place your cursor on any entry to the left of a "D" and press **PF4** (Select Detail) to view the detail level permission for the specified function.
6. Press **PF5** (Main Menu) to return to the Security Maintenance template.

Steps to Add a New Profile

1. At Security Maintenance, type the user-id, name, and SSN of the new profile.
2. Type A in the Function space and press **ENTER** to begin the Add process.
3. Type the temporary password (twice for verification) to be assigned to the user and press **ENTER** to begin the Add process.
4. Press **ENTER** again to proceed to the Security Administrator Permissions template.
5. Enter the permission levels required on the Security Administrator Permissions template and press **ENTER** to proceed to the Functional Security Permissions template.
6. Enter the permission levels required on the Functional Security Permissions template by entering U for update capability, R for review only capability, and "blank" for no access.

   The functions which are followed by "D" have detail level authorizations. For example, both personnel and payroll tables maintenance functions have detail level authorizations; an individual may be allowed to update some tables, view others, and may not have any access at all to the remaining tables. If an individual is given global authority at the functional level for an item with detail level authorizations, this individual will have the same permission for all the detail level authorizations ("U" for update in the functional level space for personnel or payroll tables maintenance means that the individual using this profile may update all the tables).

   To assign detail level authorizations for a given function enter X in the space to the right of the function and press **ENTER**. The cursor will move to the next line automatically.

   Return the cursor to the "D" for the function and press **PF4** to view the detail level authorizations. Continue to define the profile by placing U or R in the appropriate detail authorizations fields and leave the remainder of the fields blank.
7. To grant update authorization for one or more payblocks, enter Y in the payblocks of your choice (NPPS will not accept "U" or "R" for these functions).
8. Batch Job Category refers to the authorization for scheduling various jobs. A "1" indicates the individual using this profile may schedule process batch

jobs only. A "2" indicates authorization to schedule report batch jobs only, and a "3" indicates authorization to schedule both process and report batch jobs.

9. Press **ENTER** to complete the add process for the new profile. You will receive a message confirming your successful addition of this profile. Press **PF3** (Previous Screen) to view the Functional Security Permissions for the new profile.
10. Press **PF5** (Main Menu) to return to the Security Maintenance template.

Note: The steps to changing an existing profile are almost identical to adding a new profile. The Function changes to "C," and you need only make changes on the selected templates.

Steps to Copy a Profile

1. At Security Maintenance, press **PF9** (Copy Security) to proceed to the Security Copy template.
2. Type the user-id of the original profile and the user-id, name, and SSN of the user to receive the second and identical profile and press **ENTER**.
3. Type the temporary password (twice for verification) to be assigned to the user.
4. Press **ENTER** to complete the process of copying a profile. You will then see a message which confirms you have successfully completed the profile copy process.
5. Press **PF5** (Main Menu) to return to the Security Maintenance template.

Steps to Delete a Profile

1. At Security Maintenance, type the user-id of the profile to be deleted.
2. Type D in the Function space.
3. Press **ENTER** to view the name and SSN for the profile to be deleted.
4. Press **ENTER** again to view a message asking you to confirm your request to delete this profile by pressing **PF11**.
5. Press **PF11** and view a message which confirms the profile has been deleted.

Steps to Define Data Access Restrictions

Data access restrictions are only in effect during SF52 Personnel Action processing. Authorization to access an employee's personnel record is determined by Organization: Assigned or Organization: Located listed on SF52 Data Access Restrictions screen.

1. At the Functional Security Permissions template, enter a **Y** for SF52 Data Access located under the Applications column.
2. Press **PF4** to set the detail level authorizations (refer to the following screen). Three levels of restrictions may be defined.

   Specific/Level - Only personnel records with organization codes or levels matching the codes entered at this level may be accessed. Up to 10 individual organization codes/levels may be listed. When specifying levels, up to five organization levels may be listed; however, each lower level organization code must be preceded by its corresponding higher level organization code.

   Range - Only personnel records with organization codes falling alphabetically between the codes entered at this level may be accessed. Both the "to" and "from" organization codes must be listed.
3. To remove restrictions, enter a "blank" for SF52 Data Access.

```
COMMAND: ________                NPPS SECURITY
NPO1330                 SF 52 DATA ACCESS RESTRICTIONS
-------------------------------------------------------------------------------
 NPPS USERID  :            FUNCTION: _   NAME:                SSN:

     ACCESS PERMISSIONS             ORGANIZATION ASSIGNED CODES
    --------------------          -----------------------------------
       SPECIFIC/LEVEL              _____  _____  _____  _____  _____
                                   _____  _____  _____  _____  _____

       RANGE                       _____ - _____

     ACCESS PERMISSIONS             ORGANIZATION LOCATED CODES
    --------------------          -----------------------------------
       SPECIFIC/LEVEL              _____  _____  _____  _____  _____
                                   _____  _____  _____  _____  _____

       RANGE                       _____ - _____
-------------------------------------------------------------------------------
  FUNCTIONS:  C= CHANGE     R= REVIEW
 PF1= HELP                   PF3= PREV SCREEN                  PF12= END
```

SF 52 Data Access Restrictions

4.3.1.2 Command and Relational Table Maintenance Menu

```
COMMAND: ________                N P P S
NPO2000                 MAINTENANCE  UTILITIES --MAINTUTL
-------------------------------------------------------------------------------


                 ENTER ONE OF THE FOLLOWING SELECTIONS:


                             1 - COMMAND TABLE

                             2 - BATCH JOB MAINTENANCE

                             3 - RELATIONAL TABLES


                SELECTION   _


-------------------------------------------------------------------------------
 PF1= HELP                    PF5= MAIN MENU                   PF12= END
```

Maintenance Utilities (MAINTUTL)

DESCRIPTION AND EXECUTION

The Maintenance Utilities (MAINTUTL) menu enables you to select command table maintenance, batch job maintenance, or relational tables maintenance, as illustrated in Figure 4.3.1.2-1, Utilities. The Batch Job Maintenance option is not described in this section, since it is fully explained in Section 5.0.

1 Command Table: Enables authorized individuals to define new commands or template ID.

3 Relational Tables: Enables authorized individuals to establish special edit parameters for personnel.

<u>Steps to Reach Maintenance Utilities</u>

1. At the Main menu, select **3** - Application Administration.
2. At the Applications Administration Menu, select **2** - Maintenance Utilities.

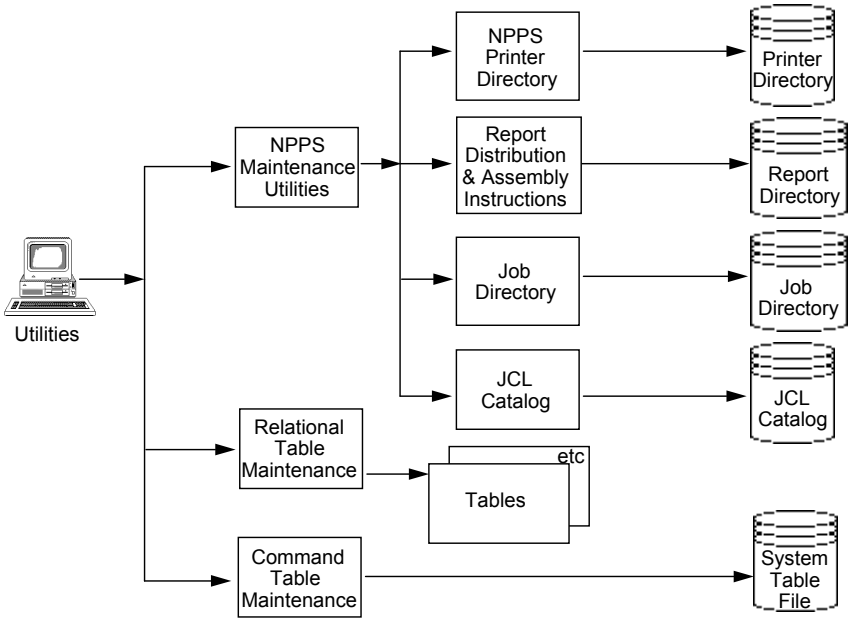

Figure 4.3.1.2-1 Utilities

4.3.1.2.1 Command Table

```
COMMAND: ________                    NPPS
NPO2100                  COMMAND TABLE UPDATE - CMDTBL
-------------------------------------------------------------------------------


  FUNCTION: _       TEMPLATE: ________    SUB-SYSTEM: __   AA - ADMINISTRATION
                                                           PA - PAYROLL
                                                           PE - PERSONNEL
                                                           EX - EXTERNAL SYSTEM
                                                           SC - SYSTEM COMMAND

  PROCESSOR: ________    DESC: ___________________    INDEX:

  COMMAND LINE PROCESSING ALLOWED? (Y/N) _

  LOCAL TABLE (Y/N) _


-------------------------------------------------------------------------------
FUNCTIONS:   A= ADD   B= BROWSE   C= CHANGE   D= DELETE   N= NEXT   R= RETRIEVE
 PF1= HELP           PF3= PREV SCREEN   PF5= MAIN MENU        PF12= END
```

Command Table Update (CMDTBL)

DESCRIPTION AND EXECUTION

The Command Table Update (CMDTBL) template enables authorized individuals to view and update the command entries or template IDs. You may add a new command, browse through a list of commands, change an existing command, delete an existing command, view the next command in the table, or retrieve the command of your choice. The functions available for command maintenance are also available for template ID Maintenance.

You may not change the template (name), subsystem, or index once a template ID or command has been added. However, you may update the other input fields as desired. If you want to change a template (name) or subsystem, you must first delete the existing template ID or command and then add the "updated" template (name) as a new template ID or command.

<u>Steps to Reach Command Table Update</u>

1. At the Main menu, select **3** - Application Administration.
2. At the Applications Administration Menu, select **2** - Maintenance Utilities.
3. At the Maintenance Utilities Menu, select **1** - Command Table.

Steps to Maintain a Command or Template ID

1. Enter the required function: **A**=Add, **B**=Browse, **C**=Change, **D**=Delete, **N**=Next, or **R**=Retrieve.
2. Enter the Template as the name of the command or template ID to be maintained.
3. To identify the subsystem to which the template belongs, enter one of the following abbreviations: **AA** - Administration, **PA** - Payroll, **PE** - Personnel, **EX** - External System, or **SC** - System Command.
4. Enter the Processor as the object module the command processor will execute when that template (command) is entered in the command line.
5. Enter the Description of the processor.
6. In the Command Line Processing Allowed space, enter **Y** to allow command line processing for this template; enter **N** not to allow command line processing.
7. If the command or Template ID is used to initiate a table maintenance process, enter **Y** in the Local Table space if the table this command/template ID will process is local; enter **N** if the table is core.

Note: Index refers to the system-generated number for the security of this template.

4.3.1.2.2 Relational Tables

```
* END OF DATA (TO REPEAT LIST, HIT ENTER)

COMMAND: ________                    NPPS
NPO2500              RELATIONAL EDIT TABLES MENU - RELTAB
     ---------------------------------------------------------------------------
         OPM                 OPM                 OPM                 OPM
 SEL     EDIT        SEL     EDIT        SEL     EDIT        SEL     EDIT
 ---   --------      ---   --------      ---   --------      ---   --------

  _    RAPPENDG       _    RAPPENDI       _    RAPPENDJ       _    RAPPENDR
  _    RAPPENDU       _    RDCK           _    RDDE           _    RELTAB
  _    REX2           _    RGRQ           _    RLWA           _    RNOO
  _    RPPL           _    RPPO           _    RPSH           _    RPSI
  _    RPSK           _    RREQFLD        _    RSLQ           _    RSLS
  _    RSML           _    RSPC           _    RSPD           _    RSPE
  _    RSPHPPLN       _    RSPHPRAT       _    RSPL           _    RSPN
  _    RSRA           _    RSRV           _    RSRW           _    RSRX
  _    RSTK           _    RSUB           _    RTNK



 ---------------------------------------------------------------------------
 PF1= HELP          PF3= PREV SCREEN          PF5= MAIN MENU          PF12= END
```

Relational Edits Table Menu - RELTAB

DESCRIPTION AND EXECUTION

The Relational Edits Table Menu (RELTAB) enables an authorized individual to select a relational table to be edited. This screen displays a list of the Table IDs for all relational edit tables. To view or maintain one of these tables, enter a **X** next to the desired table ID and press **ENTER**. You will then proceed to a view of the first entry for the table you specified.

The view of the specified table will look different depending on the table chosen. If you choose RAPPENDG, RAPPENDI, RAPPENDJ, RAPPENDR, RAPPENDU, RDDE, REX2, RLWA, RNOO, RPPO, RPSH, RPSI, RREQFLD, RSLQ, RSLS, RSPC, RSPD, RSPE, RSPHPPLN, RSPHPRAT, RSPL, RSRA, RSRV, RSRW, RSRX, RSTK or RSUB from the RELTAB menu, the view will look similar to the APPENDIX G (RAPPENDG) table shown.

```
COMMAND: ________                    NPPS
NPO2427                    APPENDIX G - RAPPENDG
      ---------------------------------------------------------------------------


 FUNCTION: R    NCC: 10000  OCC CODE: ____      OPM EDIT CODE: NSD









---------------------------------------------------------------------------------
FUNCTIONS:    A= ADD    B= BROWSE    D= DELETE    N= NEXT    R= RETRIEVE
 PF1= HELP           PF3= PREV SCREEN    PF5= MAIN MENU        PF12= END
```

Appendix G - RAPPENDG

If you choose RDCK, RGRQ, RPPL, RPSK, RSML, RSPN, or RTNK from the RELTAB menu, the view will look similar to the two versions of the Relational Edit - RPSK table shown below. The first view represents the TRIGGER portion of the edit. The Trigger is the value of a specific field which initiates a check for an acceptable Edit Value in another field. The second view represents the EDIT VALUE portion of the edit. PF9 is used to toggle between the two views. All possible values that can trigger the edit are entered using the Trigger view. All valid values based on the trigger value are entered using the Edit Value view. The text of the edit displayed on both views is derived from table TOPMMSG. The Change function is not allowed on these edits. You can only Add or Delete entries.

```
 COMMAND: ________                    NPPS
 NPO2501                  RELATIONAL EDIT - RPSK
      ---------------------------------------------------------------------------
                                                                        TRIGGER
          FUNCTION:  R

  THE POSITION: OCCUPIED MUST BE 3 OR 4 WHEN THE NOAC IS 142$$, 143$$, 145$$,
146$$, 147$$, 148$$, 149$$, 542$$, 543$$, 546$$, 548$$ OR 549$$. (APR '96)



                                  NOAC   142__



---------------------------------------------------------------------------------
 FUNCTIONS:  A= ADD    B= BROWSE    D= DELETE    N= NEXT    R= RETRIEVE
 PF1= HELP    PF3= PREV SCREEN    PF5= MAIN MENU   PF9= EDIT VALUE    PF12= END
```

Relations Edit - RPSK (TRIGGER)

```
COMMAND: ________                    NPPS
NPO2501                  RELATIONAL EDIT - RPSK
     ---------------------------------------------------------------------------
                                                                        EDIT VALUE
         FUNCTION:  R

  THE POSITION: OCCUPIED MUST BE 3 OR 4 WHEN THE NOAC IS 142$$, 143$$, 145$$,
146$$, 147$$, 148$$, 149$$, 542$$, 543$$, 546$$, 548$$ OR 549$$.



                              POSOCC   3



 ---------------------------------------------------------------------------
  FUNCTIONS:  A= ADD    B= BROWSE    D= DELETE    N= NEXT    R= RETRIEVE
  PF1= HELP    PF3= PREV SCREEN    PF5= MAIN MENU   PF9= TRIGGER       PF12= END
```

Relations Edit - RPSK (EDIT VALUE)

While viewing the specified table, you may select to add a new entry, browse a list of entries, change an existing entry (unless otherwise specified), delete an existing entry, view the next entry in the table, or retrieve (jump to) the entry of your choice. Enter the letter representing your choice of functions in the Function blank.

Steps to Reach Relational Tables

1. At the Main Menu, select **3** - Application Administration.
2. At the Applications Administration Menu, select **2** - Maintenance Utilities.
3. At the Maintenance Utilities Menu, select **3** - Relational Tables.

4.3.1.3 Processing Controls Menu

```
COMMAND: _______                N P P S
NPO3000                  PROCESSING  CONTROLS --PROCNTL
 ---------------------------------------------------------------------------


                  ENTER ONE OF THE FOLLOWING SELECTIONS:


                             1 - PAYROLL PROCESSING CONTROL

                             2 - PERSONNEL PROCESSING CONTROL

                             3 - INSTALLATION TABLE

                       SELECTION  _




---------------------------------------------------------------------------
 PF1= HELP                   PF5= MAIN MENU                    PF12= END
```

Processing Controls (PROCNTL)

DESCRIPTION AND EXECUTION

The Processing Controls (PROCNTL) menu allows you to select one of the three options described below.

1 Payroll Processing Control: View or update the Payroll Controls Table

2 Personnel Processing Control: View or update the Personnel Controls Table

3 Installation Table: View or update the Installation Code Table

<u>Steps to Reach Processing Controls</u>

1. At the Main Menu, select **3** - Application Administration.
2. At the Application Administration Menu, select **3** - Processing Controls.

4.3.1.3.1 Payroll Processing Control

```
COMMAND: ________                    NPPS
NPO3100              PAYROLL PROCESSING CONTROL - CTLPAY
--------------------------------------------------------------------------------
FUNCTION:  _
                              MANUALLY CONTROLLED

PRIOR LEAVE YEAR ENDING DATE  ________
MATURE LOCK (Y/N)  _        NEBA YEAR  __       PARTIAL/FURLOUGH (Y/ )  _
DEFAULT PAYBLOCK FOR ACCESSIONS  __             TALC INSTALLED (Y/ )  _
TAEDIT SCROLL SEQUENCE   _  (1=PAYBLOCK & SSN 2=PAYBLOCK & NAME 3=SSN 4=NAME)

///////////////////  AUTOMATICALLY UPDATED WITH OVERRIDE  ///////////////////

PAYROLL TABLE LOCK (Y/ )  _              TSP EFFDATE   ________
TSP TAPE SEQ  ____                       TAX QUARTER   _
PAY PERIOD    __                         CURRENT LEAVE PERIOD  __
CURRENT PP BEGINNING DATE ________       MONTH TO DATE (Y/N)   _
CURRENT PP ENDING   DATE  ________       NUMBER OF LEAVE PERIODS THIS YEAR  __
FEGLI YR  ____                           PAYROLL DATA LOCK (Y/ )  _
--------------------------------------------------------------------------------
 FUNCTIONS:      A= ADD      C= CHANGE        D= DELETE      R= RETRIEVE
 PF1= HELP            PF3= PREV SCREEN   PF5= MAIN MENU        PF12= END
```

Payroll Processing Control (CTLPAY)

DESCRIPTION AND EXECUTION

The Payroll Processing Control (CTLPAY) template is used to display and update payroll control data defined in the Payroll Control Table. NPPS uses this data to determine if certain processing, such as quarterly processing, should be performed. This information is also used to obtain the pay period date for reports and other processing, and to determine if special or periodic processing is required. The Control Data Table Record must be changed to accommodate the type of processing to be performed.

<u>Steps to Reach Payroll Processing Controls</u>

1. At the Main Menu, select **3** - Application Administration.
2. At the Application Administration Menu, select **3** - Processing Controls.
3. At the Processing Controls Menu, select **1** - Payroll Processing Control.

While viewing the Payroll Processing Control template, you may add new data, change existing data, delete existing data, or retrieve the data. Enter the letter representing your choice of functions in the function blank.

DESCRIPTION OF USER INPUTS FOR PAYROLL PROCESSING CONTROL

MANUALLY CONTROLLED VALUES:

USER INPUTS	DESCRIPTION
Default Payblock for Accessions	Enter the payblock number that NPPS will automatically assign to an accession (NOAC 1** or ***A) at the time that it is matured. This assignment may be changed later by payroll professional.
TALC Installed	Enter a **Y** to indicate that the Time, Attendance, and Labor Collection/Labor Distribution System (TALC/LD) has been installed. This will tell NPPS to create TALC notifications of NPPS actions. The TALC/LD System is not used at this time.
T&A Scroll Option	Enter **1**, **2**, **3**, or **4** to determine the scrolling order TAEDIT online will use.

VALUES TO BE AUTOMATICALLY UPDATED IN BATCH:

USER INPUTS	DESCRIPTION
Prior Leave Year Ending Date	Enter pay period ending date of the last leave period of the prior leave year. This field is printed on the SF 1150 (Core Report 409).
Payroll Table Lock (Y/)	Enter **Y** to stop table changes after the initial pay computation processing (i.e., lock out online processing).
TSP Effdate	The date to be used for TSP validation, TSP BP Tape, and the TSP Journal Voucher. Date is the current PP Ending Date plus 10 days.
TSP Tape Seq	Sequence number which is increased by an increment of one each pay period during the production of the TSP tape.
Tax Quarter	Calendar year quarter (blank, 1 - 4); will be blank until the last full pay period of the quarter, then it is set to a number which indicates NPPS should generate the quarterly reports produced in the current pay period.
Pay Period	Pay period number (1-27).
Current Leave Period	Leave period number (1-27).
Current PP Beginning Date	Pay period start date (always a Sunday).
Month-to-Date (Y/N)	Indicate "Month-end" with **Y** and "Not Month-end" (i.e., off-month) with **N**.
Current PP Ending Date	Thirteen days from the above PP starting date (always a Saturday).
Number of Leave Periods	Number of leave periods in the current year (26 or 27).
FEGLI Year	The year to be used for FEGLI Age Group calculation.
NEBA Year	Enter the date to be used in NEBA calculation.
Payroll Data Lock	Enter **Y** to stop master file updates after the final reports process has begun (i.e., lock out online processing and Payroll Mature).
Mature Lock (Y/N)	Enter **Y** to stop online personnel mature processing before the pay is computed.
CPO Center	CPO User Enters ‘Y’ or ‘N’ using ‘C’ Change Function, Mature Lock generates a ‘window’ listing all NASA Centers. The Mature Lock, when set, is independent of each Center.

```
COMMAND: ________                    NPPS
NPO3100               PAYROLL PROCESSING CONTROL - CTLPAY
      ---------------------------------------------------------------------------
FUNCTION:  _
                              MANUALLY CONTROLLED

PRIOR LEAVE YEAR ENDING DATE  ________
MATURE LOCK (Y/N)  _        NEBA YEAR  __       PARTIAL/FURLOUGH (Y/ )  _
DEFAULT PAYBLOCK FOR ACCESSIONS  __             TALC INSTALLED (Y/ )  _
TAEDIT SCROLL SEQUENCE   _  (1=PAYBLOCK & SSN 2=PAYBLOCK & NAME 3=SSN 4=NAME)

///////////////////  AUTOMATICALLY UPDATED WITH OVERRIDE  ///////////////////

PAYROLL TABLE LOCK (Y/ )  _              TSP EFFDATE   ________
TSP TAPE SEQ  ____                       TAX QUARTER   _
PAY PERIOD    __                         CURRENT LEAVE PERIOD  __
CURRENT PP BEGINNING DATE ________       MONTH TO DATE (Y/N)   _
CURRENT PP ENDING   DATE  ________       NUMBER OF LEAVE PERIODS THIS YEAR  __
FEGLI YR  ____                           PAYROLL DATA LOCK (Y/ )  _
-------------------------------------------------------------------------------
 FUNCTIONS:      A= ADD      C= CHANGE        D= DELETE      R= RETRIEVE
 PF1= HELP            PF3= PREV SCREEN   PF5= MAIN MENU        PF12= END
```

Payroll Processing Control - CTLPAY

4.3.1.3.2 Personnel Processing Control

```
COMMAND: ________                    NPPS
NPO3200              PERSONNEL PROCESSING CONTROL - CTLPER
-------------------------------------------------------------------------------

FUNCTION: _

 OFFICE ID  ____                                      REPORT 150,151
 MAIL CODE  ________                                  REPORT 250,251,254,369,372
 CONTACT  ______________________________________      REPORT 250,251,254,369,373
 ORG HIERARCHICAL STRUCTURE  ____                     REPORT 150
 TSP ENROLLMENT DATE (MM DD YY)  __ __ __             REPORT 254

 SIGNATURE CODES:  APPROVING OFFICIAL  _              REPORT 151

 TSP SEASON INDICATOR  _                              EDITING
 MATURE RUNNING (Y/N)  _                              INPUT CONTROL
 POSITION'S  ____________________________________     SF 50/52
 ORG LOCATION ____________________________       PERFORMANCE DATE CODE _
                                                      TOA LIMIT (YEARS)
-------------------------------------------------------------------------------
 FUNCTIONS:  A= ADD     C= CHANGE     D= DELETE     R= RETRIEVE
 PF1= HELP          PF3= PREV SCREEN          PF5= MAIN MENU          PF12= END
```

Personnel Processing Control (CTLPER)

DESCRIPTION AND EXECUTION

The Personnel Processing Control (CTLPER) template is used to display and update personnel control data defined in the Personnel Control Table. This data is used by NPPS to determine report cut-off dates, trigger periodic reports, and trigger on-request reports. The Control Data Table Record must be changed to accommodate the type of processing to be performed.

<u>Steps to Reach Personnel Processing Control</u>

1. At the Main Menu, select **3** - Application Administration.
2. At the Application Administration Menu, select **3** - Processing Controls.
3. At the Processing Controls Menu, select **2** - Personnel Processing Control.

While viewing the Personnel Processing Control, you may add new data, change existing data, delete existing data, or retrieve the data of your choice. Enter the letter representing your choice of functions in the function blank.

DESCRIPTION OF USER INPUTS FOR PERSONNEL PROCESSING CONTROL

USER INPUTS	DESCRIPTION
Office ID	Enter the OPM designated number to print on Core Reports 150 (block 48), 151, and Payroll Report 314.
Mail Code	Enter the Mail Code to print on Core Reports 250, 251, 254, 369, and 372
Contact	Enter the Human Resources contact to print on Core Reports 250, 251, 254, and 369.
ORG Hierarchical	Enter the default hierarchical structure for the organizations at your installation. NPPS uses this structure to locate organizational names for printing on SF 50s (For further explanation, refer to Section 4.1.5 under the subheading Interrelationships).
TSP Enrollment Date	TSP Enrollment Date to appear on Core Report 254. Used to determine TSP Eligibility Code for Employee Express Extract to OPM. Used to determine TSP Status Code when employee stops TSP contributions. Must be changed on the first day of Open Season, to be the first day of the first full pay-period in the enrollment month.
Signature Code	Enter the Signature Code that corresponds to the signature Approving Official to print on Core Report 151.
TSP Season Indicator	Indicates whether the TSP season is Open (O) or Closed (C). When the TSP Season is set to Closed, NPPS will only accept TSP Status Codes of Ineligible (I) or Terminated (T). You must change the indicator to Open (O) in order to hire employees with a TSP status of Yes (Y), No (N), or Eligible (E) without bypassing the edits.
Mature Control	This code is program generated, but may be overridden. If you initiate a run of the mature process, NPPS checks this field to verify another mature process is not already running (i.e., this field will have a value of "N"). Then NPPS sets the field to "Y" and begins the mature process you requested. When the mature process is finished, NPPS resets this field to "N" so another mature process may be run at your option. Should NATURAL go down while a mature process is running, you may need to manually reset this field to "N" before you can restart the mature process.

USER INPUTS	DESCRIPTION
Position's Org Location	Enter the name, city, and state where the organization is located as it is shown on the position description to print on the SF 50/52, blocks 14 and 22.
Performance Date Code	Enter a blank to bypass the automatic performance date calculation, a ‘1’ for the EOD Date to be used in the calculation, or a ‘2’ for the current performance evaluation effective date to be used.

Note: There is only one personnel processing control record per installation. This record is automatically retrieved when you move to the Personnel Processing Control template. You may change the record using the function code "C." You do not need to use the function code "R" for retrieve in order to view this record since all information in the record was entered when NPPS was installed at your site. It is unlikely, therefore, that you will add or delete this record.

4.3.1.3.3 Installation Name

```
COMMAND: ________                    NPPS
NPO3300                   INSTALLATION NAME - TINSTALL   1 OF 2
-------------------------------------------------------------------------------
 FUNCTION: _                                DUTY STATION: _________
INSTALLATION NAME/ADDRESS/CITY-STATE-ZIP    ADDITIONAL ADDRESS FOR SSA TAPE
 ____________________________________________ ____________________________________
 ________________________________             ____________________________________
 _______________    ___    _________         FEDERAL TAX W2 ID: ____________

*--- FEDERAL RESERVE BANK ----- V O U C H E R --------- TSP CONTACT ----------*
  NAME/ADDR-1/ADDR-2/CITY-STATE-ZIP
 ____________________________________        NAME: ________________________________
 ____________________________________       PHONE: ___________
 ____________________________________         LOC: ________________
 _______________    ___    _________
APPROPRIATION CODE:  ______________________________
BOND FEDERAL RESERVE BANK CITY: ________________
PAYROLL OFFICE NO: ________      AGENCY CODE: ____
-------------------------------------------------------------------------------
FUNCTIONS:   A= ADD     C= CHANGE     D= DELETE                 R= RETRIEVE
 PF1= HELP           PF3= PREV SCREEN   PF5= MAIN MENU        PF7= BACKWARD
 PF8= FORWARD        PF12= END_
```

Installation Name - TINSTALL (Page 1)

```
COMMAND: ________                    NPPS
NPO3300                   INSTALLATION NAME - TINSTALL   2 OF 2
-------------------------------------------------------------------------------
 FUNCTION: _
                              V O U C H E R
*-------------------------------- NEBA CHECK --------------------------------*

       DEFAULT NEBA CHAPTER                     ALTERNATE NEBA CHAPTER (1)
  NAME/ADDR-1/ADDR-2/CITY-STATE-ZIP          NAME/ADDR-1/ADDR-2/CITY-STATE-ZIP
 ____________________________________       ____________________________________
 ____________________________________       ____________________________________
 ____________________________________       ____________________________________
 _______________    ___    _________       _______________    ___    _________




-------------------------------------------------------------------------------
FUNCTIONS:   A= ADD     C= CHANGE     D= DELETE                 R= RETRIEVE
 PF1= HELP           PF3= PREV SCREEN   PF5= MAIN MENU        PF7= BACKWARD
 PF8= FORWARD        PF12= END_
```

Installation Name - TINSTALL (Page 2)

DESCRIPTION AND EXECUTION

The Installation Name (TINSTALL) template is used to display and update the Installation Code Table. Each NASA installation represents one table entry.

Steps to Reach Installation Name

1. At the Main Menu, select **3** - Application Administration.
2. At the Application Administration Menu, select **3** - Processing Controls.
3. At the Processing Controls Menu, select **3** - Installation Table.

DESCRIPTION OF USER INPUTS FOR INSTALLATION NAME TABLE

In order to retrieve the data for your installation, enter the function code **R** and your installation code, then press **ENTER**. To change data for your installation, change the function code to **C** and type in your changes, then press **ENTER**.

Field Name	Description	Source
Installation Code	Code which identifies the installation	User
Installation Name	Name of the installation.	User
Installation Address	Address of the installation.	User
Installation Duty Station	Duty station code which will be used on certain reports.	User
Additional Address For SSA Tape	Additional address lines used to further identify the installation address when submitting the SSA tape during pay year-end processing.	User
Federal Tax W2 ID	ID assigned by the federal government to the installation; it is read from here and placed on every W-2 during pay year-end processing.	User
NEBA Check: Name Address	Name and address of the institution which receives the NEBA pay from the installation each pay period. Two sets are provided.	User
City-State-Zip	One for the Default NEBA Chapter and another for the Alternate NEBA Chapter.	User
Federal Reserve Bank: Name, Address, City-State-Zip	Name and address of the federal reserve bank which receives the tax pay from the installation each pay period.	User
Appropriation Code	Up to two other appropriation codes may be entered which may be used for other agencies (e.g., Army, when vouchering). These codes appear on the SF 1166 Voucher Schedule of Pay.	User
TSP Contact Name	Name of the installation TSP contact which appears on TSP tape.	User

Field Name	Description	Source
Phone	Phone number of the installation payroll contact which appears on TSP tape and EFT tape.	User
Location	Sixteen-digit number which represents the installation and appears only on TSP tape.	User
Agency Code	Four-digit number which will be assigned (as a default) for accessions.	User
Payroll Office Number	Eight-digit number which identifies the agency and appears on EFT tape and NET tape.	User
Bond Federal Reserve Bank City	Fifteen-digit number which identifies the Bond Federal Reserve Bank City for payroll Core Report 406	User

4.3.1.4 Help Maintenance

You may access the help facility by pressing **PF1** (Help) from any menu or template in the entire NPPS. For example, to access help while viewing the following Master Employee Record Data Entry Menu, press **PF1**.

```
COMMAND: ________                    NPPS
NAO1000          MASTER EMPLOYEE RECORD DATA ENTRY MENU - MMER
-------------------------------------------------------------------------------

                  ENTER ONE OF THE FOLLOWING SELECTIONS: _


                       1 - MASTER SELECTION MER MENU
                       2 - EMPLOYEE LOCATION MENU
                       3 - CURRENT PP PAY ACTIONS MENU
                       4 - LEAVE HOURS ADJUSTMENTS MENU
                       5 - DOLLAR ACCUMULATIONS ADJUSTMENTS MENU
                       6 - MER CONTROLS AND QUERIES MENU
                       7 - PAYROLL SUSPENSE MAINTENANCE QUERY
                       8 - MASS AND GLOBAL TRANSACTIONS MENU
                       9 - START NEW EMPLOYEE ADD CHAIN


-------------------------------------------------------------------------------
 PF1= HELP          PF3= PREV SCREEN   PF5= MAIN MENU        PF12= END
```

Master Employee Record Data Entry Menu

You will then proceed to the first page of the help screen(s) that accompany this particular menu PF1 (refer to the following screens). The help screen(s) which accompany menus always describe the choices available from the menu. The help screen(s) that accompany templates provide an explanation of the function field and refer you to the data dictionary for information regarding other fields which appear on the template.

```
NSS0004                          NPPS
 MODE: DISPLAY              HELP FACILITY

 TEMPLATE ID: MMER            PAGE NUMBER:  1      FUNCTION: R
 ---------------------------------------------------------------------------

 USE:                               TO:

 1 - Master Selection MER Menu      Access any of the MER Modules pertaining
                                    to deductions, pay adjustments, leave
                                    adjustments, YTD, query, miscellaneous,
                                    suspend, and mass.

 2-  Employee Location Menu         Display/update information pertaining to
                                    distribution of pay-related data.

 3 - Current PP Pay Actions Menu    Process current pay period actions.

                                                                Screen 1 of 3
---------------------------------------------------------------------------
   FUNCTIONS:   A= ADD   C= CHANGE   D= DELETE   I= INSERT   R= RETRIEVE
 PF1= TOP PF2= DISP/UPDT MODE  PF3= END  PF4= DD PF7= BKWD  PF8= FWD  PF9= COPY
```

Help Facility for MMER (Page 1)

```
NSS0004                          NPPS
 MODE: DISPLAY              HELP FACILITY

 TEMPLATE ID: MMER            PAGE NUMBER:  2      FUNCTION: R
 ---------------------------------------------------------------------------

 USE:                                        TO:

 4 - Leave Hours Adjustments Menu             Update an employee's record to
                                              reflect leave hours.

 5 - Dollar Accumulations Adjustments Menu    Change an employee's dollar
                                              accumulation amounts.

 6 - MER Controls and Queries Menu            Display an employee's payroll
                                              information.

                                                                Screen 2 of 3
---------------------------------------------------------------------------
   FUNCTIONS:   A= ADD   C= CHANGE   D= DELETE   I= INSERT   R= RETRIEVE
 PF1= TOP PF2= DISP/UPDT MODE  PF3= END  PF4= DD PF7= BKWD  PF8= FWD  PF9= COPY
```

Help Facility for MMER (Page 2)

```
S0004                          NPPS
      MODE: DISPLAY              HELP FACILITY

      TEMPLATE ID: MMER            PAGE NUMBER:  3      FUNCTION: R
      ---------------------------------------------------------------------------

      USE:                                          TO:

      7 - Payroll Suspense Maintenance Query         Display suspended payroll
                                                     information for an individual
                                                     employee or group of employees.

      8 - Mass and Global Transactions Menu          Access the option to perform mass
                                                     changes on payroll information.

      9 - Start New Employee Add Chain               View a list of new employees
                                                     and initiate the add chain.

                                                                        Screen 3 of 3
     ---------------------------------------------------------------------------
        FUNCTIONS:   A= ADD   C= CHANGE   D= DELETE   I= INSERT   R= RETRIEVE
      PF1= TOP PF2= DISP/UPDT MODE  PF3= END  PF4= DD PF7= BKWD  PF8= FWD  PF9= COPY
```

Help Facility for MMER (Page 3)

Help Screen Conventions

Each help screen, or set of help screens, is unique because it describes the function of the menu or template it accompanies. However, all help screens share some common features and functions.

Title Line One (from left to right):

Mode	This field indicates whether the help facility is displaying the screen in the Display mode, or Update mode. While in the Display mode, the screen may be viewed, but its contents may not be changed. However, in the update mode, the contents of the screen you are viewing may be modified. When the help facility is first requested, NPPS always presents the help screen(s) requested in the Display mode.
NPPS Help Facility	This title appears at the top center of all help screens.

Title Line Two (from left to right):

Template ID	This field displays the abbreviated name of the menu or template the help screen accompanies. For example, the help screen which accompanies the Master Employee Record Data Entry Menu has the template ID of MMER.
Page Number	This number represents the page sequence within a set of help screens. When the help facility is first requested, NPPS displays the first screen in the set of screens (i.e., page 1).
Function	This field identifies the function you want to perform while viewing the help screen. While you are in the Display mode, the function will always be "R" for retrieve. You may change the function only after you have changed the mode to Update.

Bottom Line One (from left to right):

This line displays the five functions available while in the Update mode. While in the Display mode, NPPS requires the function to be "R" for retrieve.

A=Add	Allows you to add a new help screen. You may type in a new template ID and/or page number prior to the add process in order to produce an entirely new screen. This function allows you to expand the help facility to include assistance for requirements that are unique to your installation.
C=Change	Allows you to change the contents of the help screen you are viewing.
D=Delete	Allows you to delete an entire screen at the time you are viewing it. If the screen was part of a set of screens, the page number of any remaining subsequent screen will automatically be renumbered.
I=Insert	Allows you to insert a new page preceding the screen you are viewing. The newly inserted screen will have the same template ID and page number as the original screen you were viewing when the insert request was made. NPPS automatically sets the function on the new screen to change, allowing the inserted screen to be filled with new information. The page number of the original screen and every screen thereafter will be automatically increased by one.
R=Retrieve	Allows you to retrieve a help screen. To view a screen within the help facility while you are viewing a different help screen, type in the template ID and page number of the screen you want to view, and NPPS will display the specified screen.

Bottom Line Two (from left to right):

PF1=Top	Moves the cursor to the top left corner of the help screen.
PF2=Disp/Updt Mode	Allows you to switch from the Display mode to the Update mode and from the Update mode back to the Display mode.
PF3=End	Allows you to leave the help facility and return to the menu or template which you were viewing when you originally requested help.
PF4=DD	Allows you to access the data dictionary.
PF7=Bkwd	Allows you to move through a set of help screens one page at a time, in decreasing page number order.
PF8=Fwd	Allows you to move through a set of help screens one page at a time, in increasing page number order.
PF9=Copy	Allows you to copy an existing set of help screens so that you have two sets with two different template IDs, but identical contents.

Help Screen Maintenance

Authorized individuals may modify the narratives on the help screens by performing any of the procedures explained as follows. Changes made to the help facility are a permanent part of an installation's NPPS system; they may be viewed by any individual who can access the corresponding template or menu. There is no limit to the number of changes that an installation can make to its help facility.

Steps to Retrieve a Specific Help Screen

1. From any template or menu, press **PF1** (Help).
2. Press **PF8** (Forward) and **PF7** (Backward) to move through a set of help screens; or tab to the Page Number field and type in the number of your choice, then press **ENTER** to proceed to the specified page number.
3. Enter a different abbreviated template or menu name in the Template ID field and the desired page number, then press **ENTER** to proceed to the specified help screen.
4. Press **PF3** to leave the help facility and return to the template or menu which you were viewing when you originally requested help.

Note: Any individual may execute the help screen retrieve procedure.

Steps to Change the Contents of a Help Screen

1. Retrieve the help screen to be changed.

2. Press **PF2** to change the mode to Update.

   Note: The function automatically becomes "C" for change.

3. Change the contents of the screen.
4. Press **ENTER** and view a message which indicates the changes have been saved.
5. Press **PF2** to return to the Display mode.
6. Press **PF3** to leave the help facility and return to the template or menu which you were viewing when you originally requested help.

Steps to Insert a Page Within a Set of Help Screens

1. Retrieve the help screen in front of which a new screen is to be inserted.
2. Press **PF2** to change the mode to Update.
3. Change the function to **I** for insert.
4. Press **ENTER** and view the newly inserted screen which has the same template ID and page number as the original screen. The original screen, and any subsequent screens, will be renumbered so their page number is increased by one. The function will automatically change to "C" so the newly inserted screen may be filled with new information. (Refer to "Steps to Change the Contents of a Help Screen" above.)
5. Press **PF2** to return to the Display mode.
6. Press **PF3** to leave the help facility and return to the template or menu which you were viewing when you originally requested help.

Steps to Add a New Set of Help Screens

1. Retrieve any help screen.
2. Press **PF2** to change the mode to Update.
3. Change the function to **A** for add.
4. Type in the template ID and page number for the new screen.
5. Press **ENTER** and view the newly added screen with the new template ID and page number you specified. You may now revise the screens to change the contents you specify.
6. Press **PF2** in order to return to the Display mode.
7. Press **PF3** to leave the help facility and return to the template or menu which you were viewing when you originally requested help.

Steps to Delete a Help Screen

1. Retrieve the help screen to be deleted.

2. Press **PF2** to change the mode to Update.
3. Change the function to **D** for delete.
4. Press **ENTER** and view a message which prompts you to confirm deletion of this screen by pressing **PF11**.
5. Press **PF11** to delete the screen and view a message that the specified screen has been deleted. Any subsequent screens within the set will be renumbered accordingly.
6. Press **PF2** to return to the Display mode.
7. Press **PF3** to leave the help facility and return to the template or menu which you were viewing when you originally requested help.

Steps to Copy a Help Screen

1. Retrieve the help screen or set of screens to be copied.
2. Press **PF9** to proceed to the Copy help screen.
3. Type in the template ID of the existing help screen or set of screens from which you want to copy.
4. Type in a new template ID for the new screen or set of help screens to which you want to copy and press **ENTER**.
5. Type in the new template ID and view the new help screen or set of screens which are the result of the copy process. You now have two different screens or sets of screens with identical contents and unique template IDs.
6. Press **PF2** to return to the Display mode.
7. Press **PF3** to leave the help facility and return to the template or menu which you were viewing when you originally requested help.

4.3.1.5 Ad Hoc Reporting (Super Natural)

```
                                    NPPS
NPO0000                    M A I N   M E N U
--------------------------------------------------------------------------



            ENTER YOUR PASSWORD AND ONE OF THE FOLLOWING SELECTIONS:


                              1 - PERSONNEL
                              2 - PAYROLL
                              3 - APPLICATION ADMINISTRATION
                              4 - EXIT TO SUPER NATURAL



                   NPPS PASSWORD            SELECTION _

--------------------------------------------------------------------------
                     PF1= HELP                PF12= END
```

Exit to SUPER NATURAL

DESCRIPTION AND EXECUTION

The adhoc-reporting tool recommended for use with NPPS is SUPER NATURAL. Selecting Exit to SUPER NATURAL (option 4) from the NPPS Main Menu takes you directly to your SUPER NATURAL private library. If you receive a message stating you are not authorized to use SUPER NATURAL, contact your supervisor or SUPER NATURAL system administrator to obtain this authorization. SUPER NATURAL is a commercial product which is distributed and maintained by Software AG. Since you should have access to a SUPER NATURAL User's Manual (also produced by Software AG) the UOG does not explain the use of SUPER NATURAL. Each installation has the responsibility to provide its members with training in basic SUPER NATURAL query and reporting skills.

To learn how to use SUPER NATURAL in conjunction with the NPPS data files, however, we recommend you take one of the NPPS Query and Reporting courses.