USER AND OPERATIONS GUIDE FOR THE NASA PERSONNEL/PAYROLL SYSTEM

Release 7.41

PrISMS Contract
NOVEMBER 1999

National Aeronautics and
Space Administration

George C. Marshall Space Flight Center
Huntsville, AL 35812

User and Operations Guide
NASA Payroll / Personnel System
Table of Contents

1 INTRODUCTION 1-1

1.1 IDENTIFICATION 1-1
1.2 PURPOSE 1-1
1.3 SCOPE 1-1

2 OPERATIONAL DESCRIPTION 2-1

2.1 OPERATIONAL SCENARIO/FUNCTIONAL DATA FLOW 2-1
2.1.1 Annual Events 2-2
2.1.2 Employee Life Cycle 2-11
2.1.3 Biweekly Pay Process 2-15
2.1.4 Personnel Processing 2-21
2.1.5 Payroll Processing 2-23
2.1.6 Personnel and Payroll Common Processing 2-25

3 USER INTERFACE 3-1

3.1 SYSTEM ACCESS 3-1
3.1.1 Logon and Logoff Procedures 3-1
3.1.2 Valid System ID and NPPS Password 3-1
3.1.3 Agency Payroll Consolidation Logon 3-2
3.1.4 Agency Leave and Earning 3-2
3.2 SYSTEM LAYOUT 3-3
3.2.1 Menus and Templates 3-3
3.2.2 Screen Conventions 3-7
3.3 NAVIGATION TECHNIQUES 3-10
3.3.1 Menu Choices 3-10
3.3.2 Command Line 3-12
3.3.3 PF Keys 3-13
3.3.4 Chained Set of Screens ENTER Key 3-14
3.3.5 Personnel Actions Hot Key 3-14
3.4 HELP SUPPORT 3-14
3.4.1 Benefits of Using Help 3-16
3.4.2 Instructions for Using Help 3-16
3.4.3 Data Dictionary 3-16
3.4.4 Instructions for Using the Data Dictionary 3-17

4 ONLINE/INTERACTIVE CAPABILITIES 4-1

4.1 PERSONNEL 4-2
4.1.1 Personnel Actions Main Menu 4-4
4.1.2 Planning Action Menu 4-24
4.1.3 Mature Process Menu 4-27

4.1.4 SF 50/SF 52 Processing Menu 4-29
4.1.5 Tables Maintenance Menu 4-32
4.1.6 Mass Actions Menu 4-49
4.1.7 Personnel History File Maintenance 4-72
4.2 PAYROLL 4-100
4.2.1 Description and Execution - CPO Center 4-101
4.2.2 Payroll Actions (MER) Menu 4-102
4.2.3 Pay Computations (T&A and Vouchering) 4-237
4.2.4 Payroll Table Processing 4-260
4.2.5 Non-personnel Action Cash Awards Processing 4-267
4.3 APPLICATION ADMINISTRATION 4-271
4.3.1 Application Administration Menu 4-272

5 BATCH USER CAPABILITY 5-1

5.1 BATCH JOB SCHEDULING 5-4
5.1.1 Batch Job Scheduler Main Menu 5-6
5.2 BATCH JOB MAINTENANCE 5-16
5.2.1 Batch Job Maintenance Utilities Main Menu 5-17

APPENDIX A APPLICABLE DOCUMENTS A-1

REFERENCE DOCUMENTS A-1
RELATED DOCUMENTS A-1

APPENDIX B ERROR MESSAGES/USER RESPONSE LIST B-1

INFORMATIONAL MESSAGES B-1
EDIT FAILURE MESSAGES B-1
SEVERE DISCREPANCY MESSAGES B-2
FATAL ERROR INFORMATION SCREEN B-2
NPPS MER MESSAGES B-3
NPPS T&A MESSAGES B-6

APPENDIX C PRODUCTION OPERATIONS GUIDE FOR NPPS C-1

NE00008 PERSONNEL BATCH MATURE C-3
NE0SF50 PERSONNEL SF 50 ..... C-5
NE00010 APPR ACT NOT REG 50 ..... C-6
NE00081 BATCH ANNUAL COMPARABILITY INCREASE (ACI) C-7
NE00366 PERSONNEL INSTALLATION-UNIQUE INTERFACE C-8
NE00096 PERSONNEL MASTER TIME FILE RECALCULATION C-9
NE00001 PERSONNEL PLANNING ACTIONS REPORT C-10
NE00002 PERSONNEL MATURE REPORTS C-11
NE00003 PERSONNEL DAILY REPORTS C-12
CA00013 PAYROLL PAY YEAR-END C-13
CA00014 PAYROLL LEAVE YEAR-END C-15
CA00015 PAYROLL FISCAL YEAR-END C-17
CA00018 PAYROLL NEBA AGE CALCULATION C-18
CA00009 PAYROLL NORMALS RECOMPUTATION C-19
CA00006 PAYROLL PAY PERIOD INITIALIZATION C-21

CA00003 PAYROLL BATCH T & A....C-23
CA00005 PAYROLL FINAL PRODUCTS AND RECONCILING REPORTS....C-26
CA00004 PAYROLL FINAL REPORTS....C-28
CA00001 PAYROLL BATCH MATURE....C-31
NE00004 TSP LETTER....C-32
NE00370 NASA PERSONNEL EDIT ERROR REPORT....C-33
CA00020 PAY YEAR-END UPDATE....C-34
CA00021 PAY YEAR-END REPORTS....C-35
CA00022 CREATE YEAR-END SSA TAPE....C-37
NE0SF52 PERSONNEL SF 52....C-38
NECAPP1 PERSONNEL BIWEEKLY CAPPS SUBMISSIONS....C-39
NECAPP2 PERSONNEL CAPPS MONTHLY SUBMISSIONS....C-40
NECAPP3 PERSONNEL CAPPS QUARTERLY SUBMISSIONS....C-41
NECAPP4 PERSONNEL EOFY CAPPS SUBMISSIONS....C-42
NP000DG PRINT DATA GLOSSARY....C-43
CA00024 CFC INSTALLATION-UNIQUE INTERFACE....C-44
CA00025 CHILD SUPPORT BIWEEKLY NEW HIRES....C-45
CA00026 CHILD SUPPORT QUARTERLY WAGES....C-46
CA00027 ADMINSTAR REFRESH....C-47
CA00045 CALIFORNIA STATE TAX QUARTER TAPE....C-48
PERSONNEL AND PAYROLL INDIVIDUAL REPORTS....C-49
AUTO SCHEDULE JOB....C-60
DATABASE SAVES AND RECOVERY....C-61
DISASTER RECOVERY....C-61

APPENDIX D INDEX BY JOB TASK....D-1

APPENDIX F BATCH JOB PARAMETER INPUT SCREENS....F-1

NEO252 RETENTION REGISTER PARM SCREENS....F-1
NEO255 RETENTION REGISTER LITE PARM SCREEN....F-3
CPO BATCH JOB PARAMETER INPUT SCREEN....F-5
NE00400/NE00410 SF50/SF52 NOTIFICATION OF PERSONNEL ACTIONS....F-6

APPENDIX G ABBREVIATIONS AND ACRONYMS....G-1

1 INTRODUCTION

This User and Operations Guide (UOG) provides the operating procedures for the National Aeronautics and Space Administration (NASA) Personnel/Payroll System (NPPS).

1.1 Identification

This UOG is a reference manual which provides the NPPS functional user and operations personnel with operating instructions.

NPPS is an agencywide system which assists each NASA installation in the administering of personnel/payroll processing and record keeping activities. NPPS was developed to replace the previous personnel and payroll systems at these installations as part of the uniform system development effort, promoted by NASA Headquarters (HQ) and the Federal Government.

This document is identified as the NASA Personnel/Payroll System User and Operations Guide.

1.2 Purpose

This UOG provides instructions for using NPPS as a tool to process personnel and payroll. This guide is specifically written for professionals who have the knowledge and skills necessary to administer personnel and payroll processing, but have no prior experience with an online system such as NPPS.

Explanations of individual data items which appear on the screens (i.e., grade, step, payblock, etc.) are not explained in the NPPS UOG; these items are described in the online data dictionary.

1.3 Scope

The UOG provides an operational overview of the NPPS, including a scenario of processes supported throughout the annual cycle, in Section 2.0. The system conventions and navigational options are described in Section 3.0. The online capabilities (i.e., personnel processing, payroll processing, and application administration) are described in Section 4.0. The batch capabilities are described in Section 5.0. The appendices provide supporting information such as the error messages and operations procedures.

In addition to this document, two online support features are available for the NPPS functional user: the help facility (which contains basic system conventions and menu navigation assistance) and the data dictionary. Both of these facilities may be accessed from almost any NPPS screen.

Also, the Marshall Space Flight Center (MSFC) Help Desk phone number (256-544-6673) is provided for obtaining assistance while using NPPS. This number may be used by each installation's NPPS Application Coordinator. Any user experiencing problems with NPPS should first contact the NPPS Application Coordinator at that user's site. Then, if necessary, the coordinator may call the MSFC Help Desk phone number.

2 OPERATIONAL DESCRIPTION

Typically the operational scenario of a system is explained completely. The products generated through the operational software capabilities are then identified and described. However, due to the large number of products NPPS creates and the complex processes that cause them to be generated, this UOG will explain the products in the context of the processes themselves. The batch job number and name will be identified after the process or report is described. For a detailed explanation of the individual products, refer to Appendix C.

2.1 Operational Scenario/Functional Data Flow

To gain an operational view of the overall functions of NPPS, the user must consider the three main cycles in NPPS processing (refer to Figure 2.1-1, Life Cycle Overview).

- Annual Events
- Employee Life Cycle
- Biweekly Pay Process

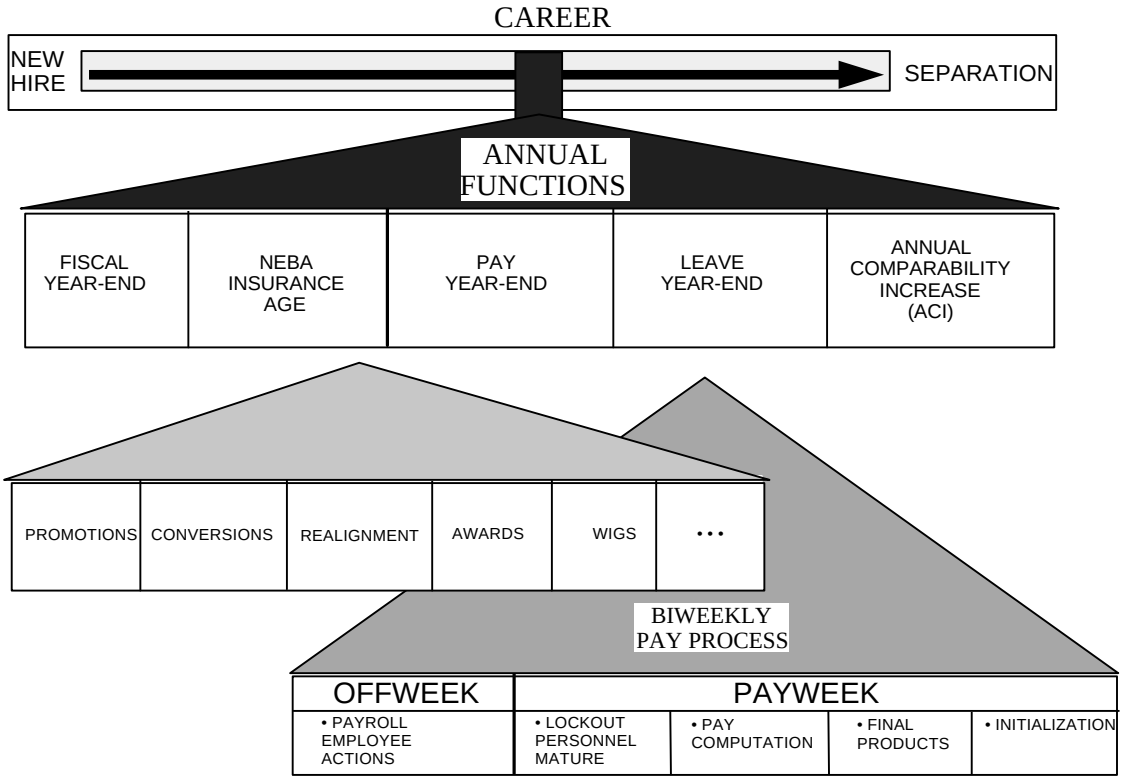

Figure 2.1-1 Life Cycle Overview

2.1.1 Annual Events

The five major annual events supported by personnel and payroll processing are listed by sequential order in the following sections. In some instances, this scenario may be altered according to the preferences of an individual installation. In addition, the Annual Comparability Increase (ACI) does not necessarily occur every year.

2.1.1.1 Fiscal Year-End

The payroll Fiscal Year-End batch processing (CA00015) is executed to initialize and compute the carry-over days for military leave (refer to Figure 2.1.1.1-1, Fiscal Year-End). These military leave days are carried over from the previous fiscal year to the new fiscal year. Processing takes place at the end of the fiscal year, September 30. During processing, the military leave year-end carry-over days are initialized and computed. See Appendix C for reports/products of the Fiscal End of Year process. (Refer to Figure 2.1.1.1-2, Fiscal Year-End Processes and Leave Year-End Processes.)

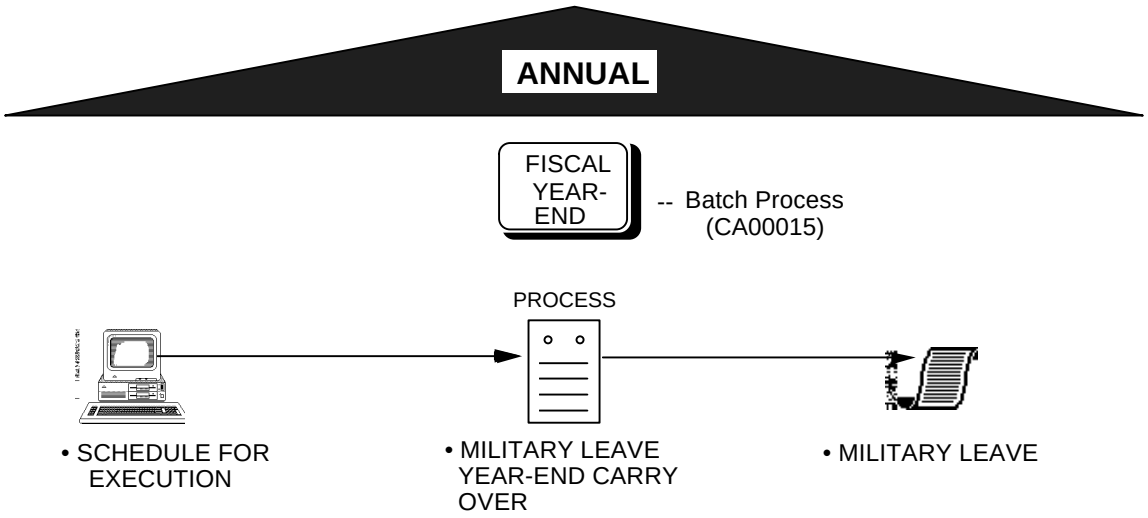

Figure 2.1.1.1-1 Fiscal Year-End

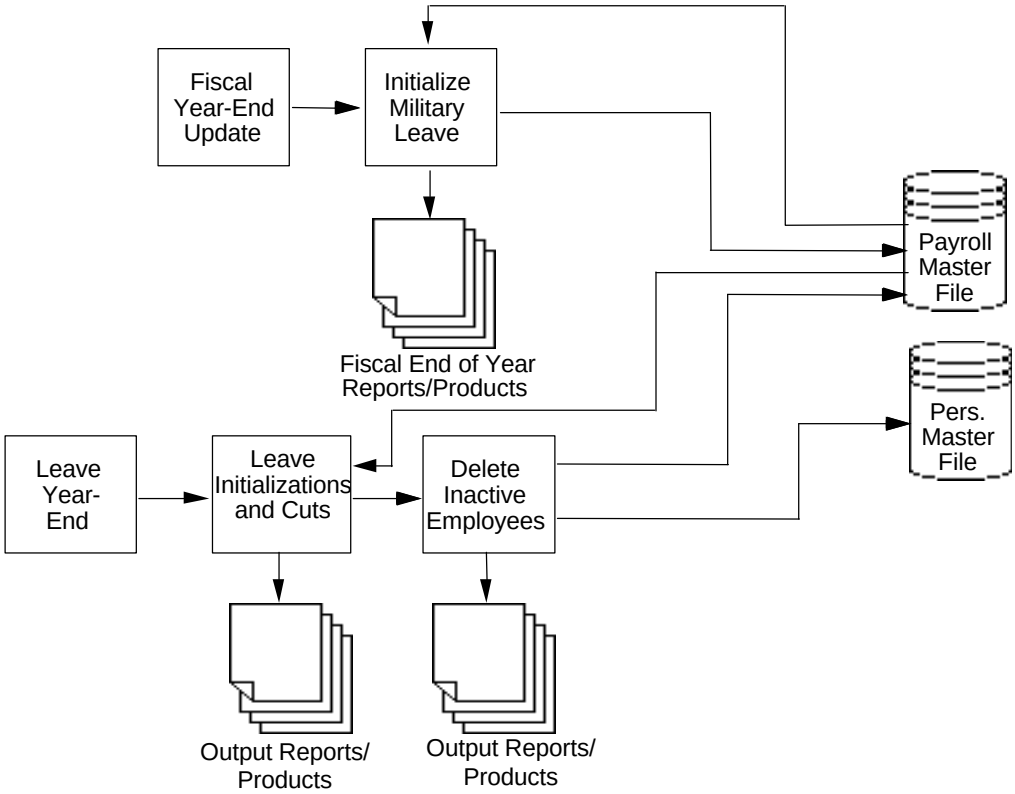

Figure 2.1.1.1-2 Fiscal Year-End Processes and Leave Year-End Processes

2.1.1.2 NEBA Age Calculation

The purpose of the NASA employee's benefit association (NEBA) age calculation process (CA00006/CA00014) is to increment the NEBA age of each employee (refer to Figure 2.1.1.2-1, NEBA Insurance Age). The NEBA age is used by the normals computation and pay computation processes to compute the NEBA age class that, along with salary class, determines the applicable premium rate for the employee biweekly deduction.

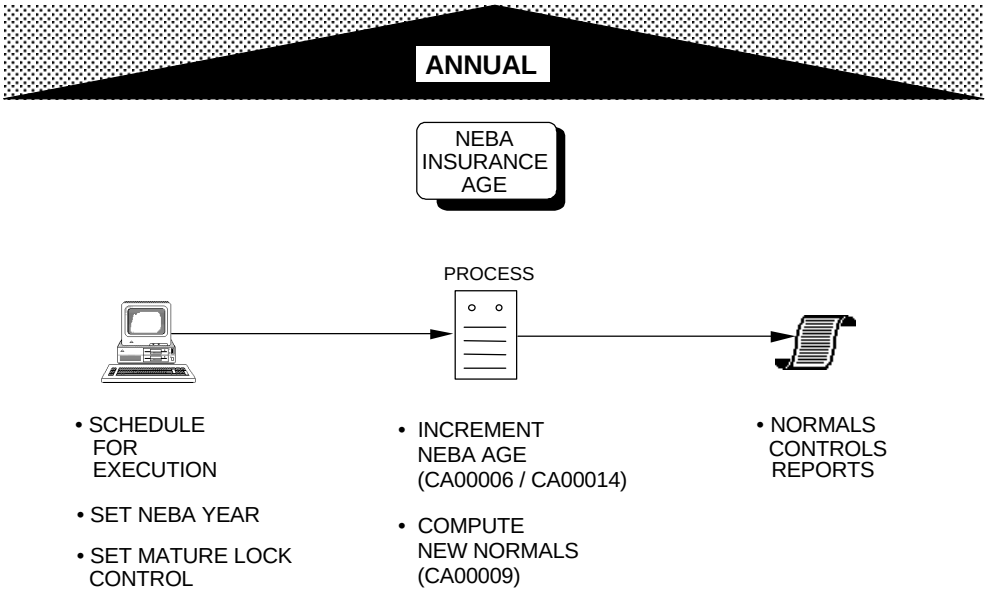

Figure 2.1.1.2-1 NEBA Insurance Age

The NEBA age calculation process occurs biweekly and again at approximately leave year-end to apply the new rate (assuming an age class change results) to the deductions that will be taken to pay for the NEBA insurance coverage for the next pay period (refer to Figure 2.1.1.2-2, Pay Year-End Processes and Age Processes NEBA).

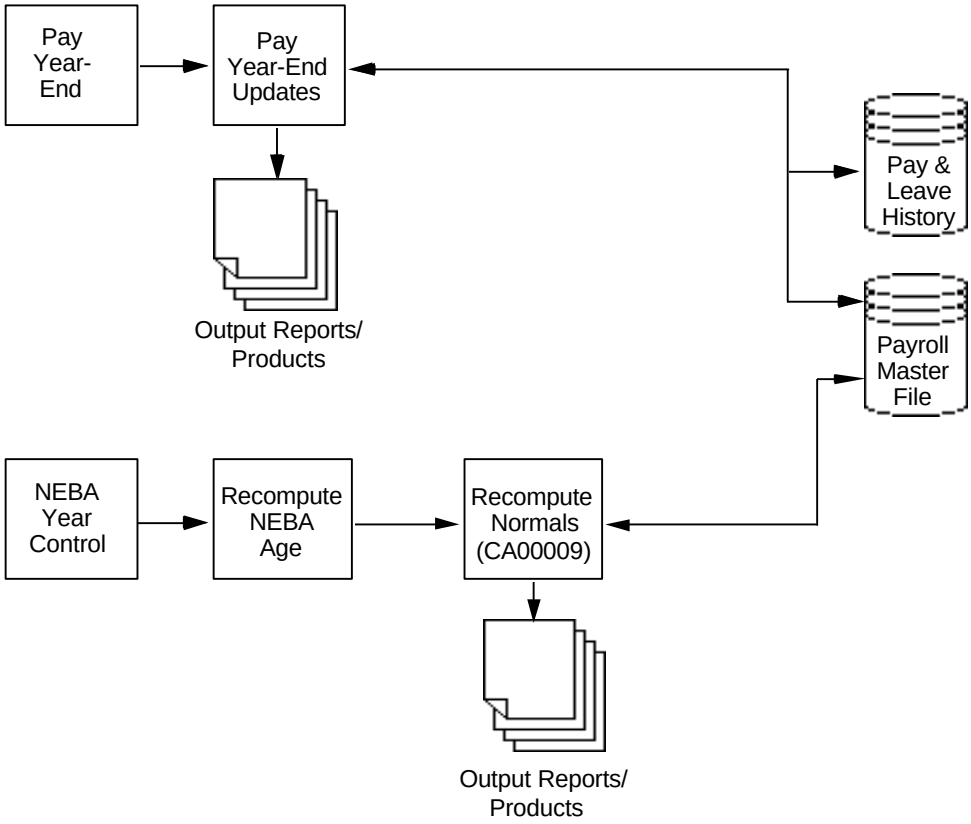

Figure 2.1.1.2-2 Pay Year-End Processes and Age Processes NEBA

The process is controlled by the setting of the NEBA year value in the payroll processing control template (CTLPAY). NEBA year value to derive the NEBA age of the employee. Therefore, the NEBA year must be set to the new value in the CTLPAY template before the NEBA age calculation process is executed.

Usually, the Normals Recomputation process (CA00009) will need to be executed after the NEBA age calculation to produce the new normals control for the NEBA deduction showing the new deduction amount for those employees whose NEBA age class has changed resulting from the new NEBA age (refer to Figure 2.1.1.2-3, Normals Recalculations).

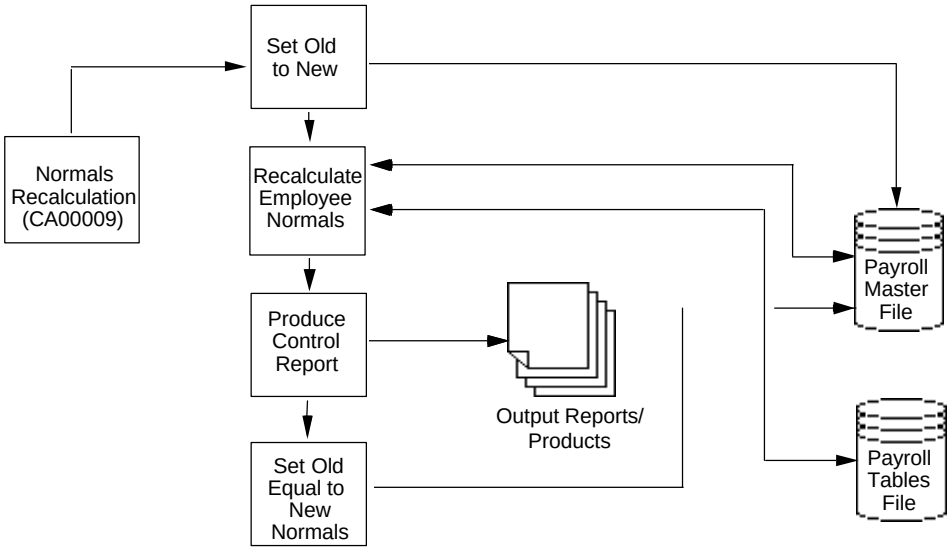

Figure 2.1.1.2-3 Normals Recalculations

2.1.1.3 Pay Year-End

During the Pay Year-End batch processing, all the products associated with the end of the pay year are created and the year-to-date (YTD) dollar amounts for the new pay year are initialized (refer to Figure 2.1.1.3-1, Pay Year-End). Pay Year-End is processed after the last pay period of the pay year is completed and before Initialization (CA00006). Table TEMPRID, which translates a State Tax Code to a State Employer ID to print in block 4 on the W-2 Form, must also be updated prior to the execution of Pay Year-End.

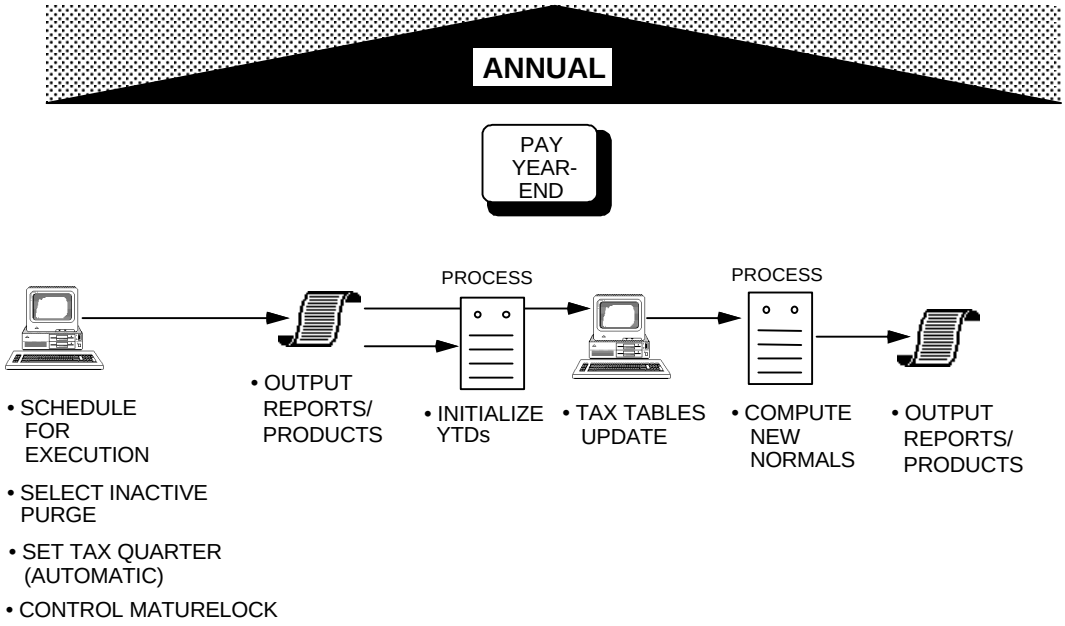

Figure 2.1.1.3-1 Pay Year-End

When Pay Year-End is being scheduled, parameters must be entered for reports and products. See Appendix C for outputs produced as a result of Pay Year-End.

After the completion of Pay Year-End processing and initialization (CA00006) for YTD fields, the installation's tax tables for the new year should be updated and the normals recomputation (CA00009) process is run to determine the new normals controls.

2.1.1.4 Leave Year-End

The Leave Year-End batch processing (CA00014) occurs before the first full pay period of January (refer to Figure 2.1.1.4-1, Leave Year-End). This means that leave year-end occurs during the pay period beginning in December and ending in January. The new Federal Employee Group Life Insurance (FEGLI) year is automatically updated in the Leave Year-End batch processing (CA00014).

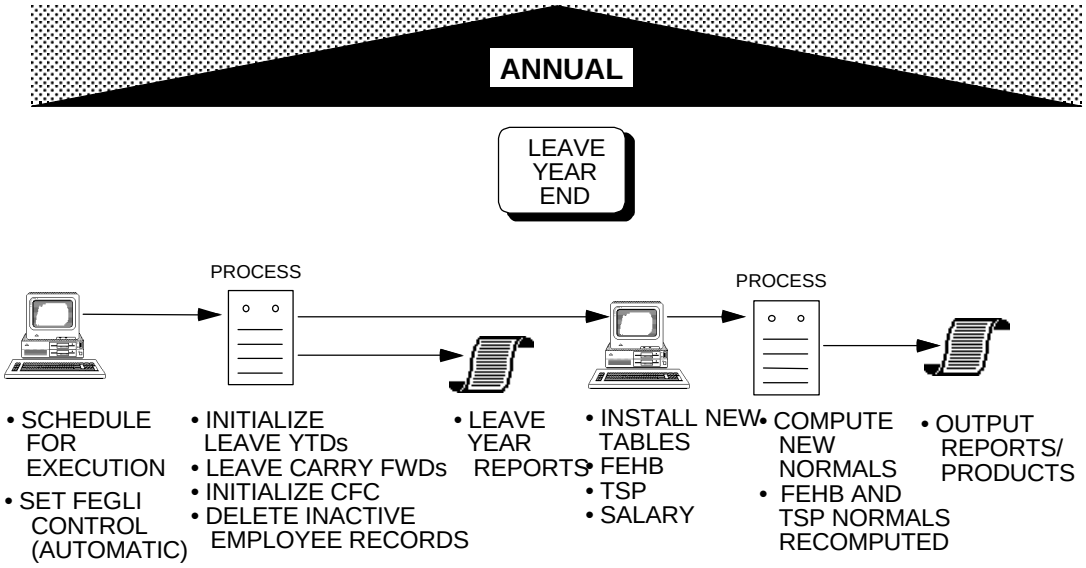

Figure 2.1.1.4-1 Leave Year-End

During the leave year-end processing, the leave year-end is closed out, YTD leave accumulators are initialized, annual and sick leave carry-over hours are computed, and LWOP Service Computation Date Hours are initialized. Combined Federal Campaign (CFC) deductions are initialized to zero for each employee who elected to have a CFC deduction for the previous year. Inactive employees are deleted from the current physical files according to selections identified by the installation during pay year-end processing, and their forwarding address is moved to the personnel history. See Appendix C for the outputs from the Leave Year-End process.

Tables should be installed prior to processing the next payroll. The normals recomputation process (CA00009) should be executed to determine new normals controls. The ACI should be executed to update the employees' salaries for the new year. After the completion of the ACI, new CFC deductions may be entered by payroll in mass.

2.1.1.5 Annual Comparability Increase

The ACI process generates a pay adjustment (NOAC 894) for each group of employees specified by the user (refer to Figures 2.1.1.5-1, ACI; and 2.1.1.5-2, ACI and GM Batch Processes). The new salary tables must be in place for the employee salaries to be loaded (refer to Section 2.1.1.4). A Standard Form (SF) 50 (Core Report 150) or a Memo in Lieu of an SF 50 (Core Report 151) should be produced for each employee who received a pay adjustment. Other non-pay actions (i.e., FEHB and TSP changes) that are effective the same day as the ACI will have their suspense sequence increased by one and SF 50 print status set to blank. SF 50s should be reprinted to correctly reflect the "From" salary as a result of the ACI being effective first.

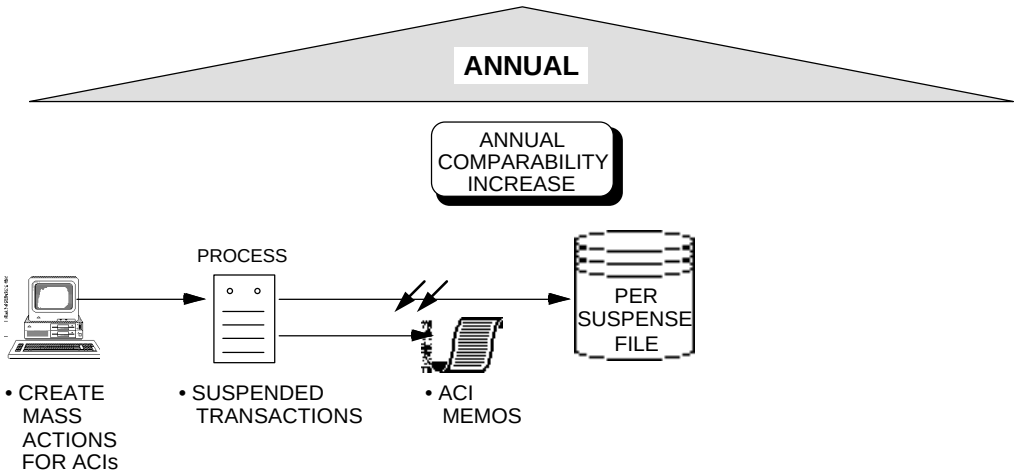

Figure 2.1.1.5-1 ACI

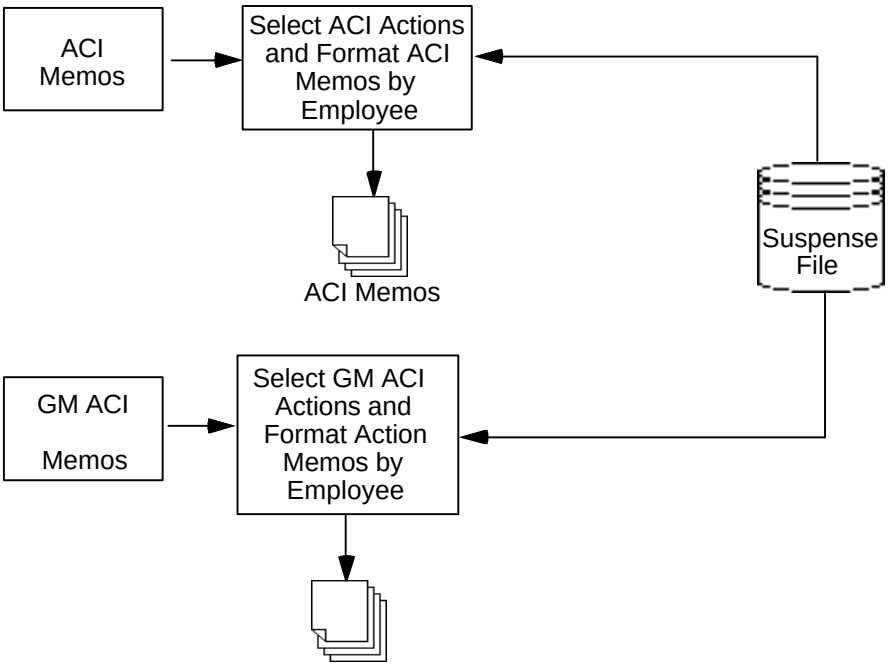

Figure 2.1.1.5-2 ACI and GM ACI Batch Processes

2.1.2 Employee Life Cycle

An employee life cycle with NASA begins on an employee's first day of work and ends on his/her last day of work at NASA (i.e., accession to separation). Personnel processes maintain the employee's record throughout the life cycle (refer to Figure 2.1.2-1, Personnel Processes).

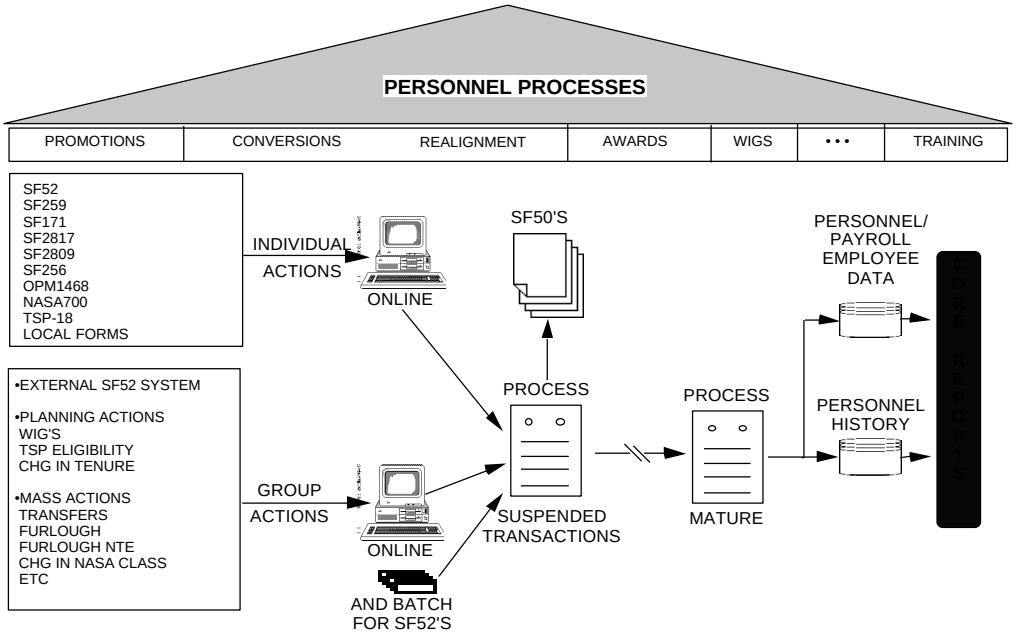

Figure 2.1.2-1 Personnel Processes

All personnel actions are placed on the suspense file and matured later according to their effective dates. This is true of individual actions (e.g., accessions) and group actions (e.g., mass transfers). Personnel actions are entered as individual actions or group actions.

Individual actions are entered online and include accessions, promotions, separations, etc. The source of data for individual actions is most often the SF 52. Other source documents for individual actions are SF 259, SF 171, SF 2817, SF 2809, SF 256, OPM 1468, NASA 700, and local forms.

Group actions are produced from planning actions or mass actions (refer to Figure 2.1.2-2, Planning Action Process and TSP Letter Process). These group actions may be executed online.

Planning actions involve a group of Within Grade (WIG) increases, a group of Changes in Tenure, or a group of changes in Thrift Savings Plan (TSP) status. See Appendix C for output reports or products resulting from the planning action process.

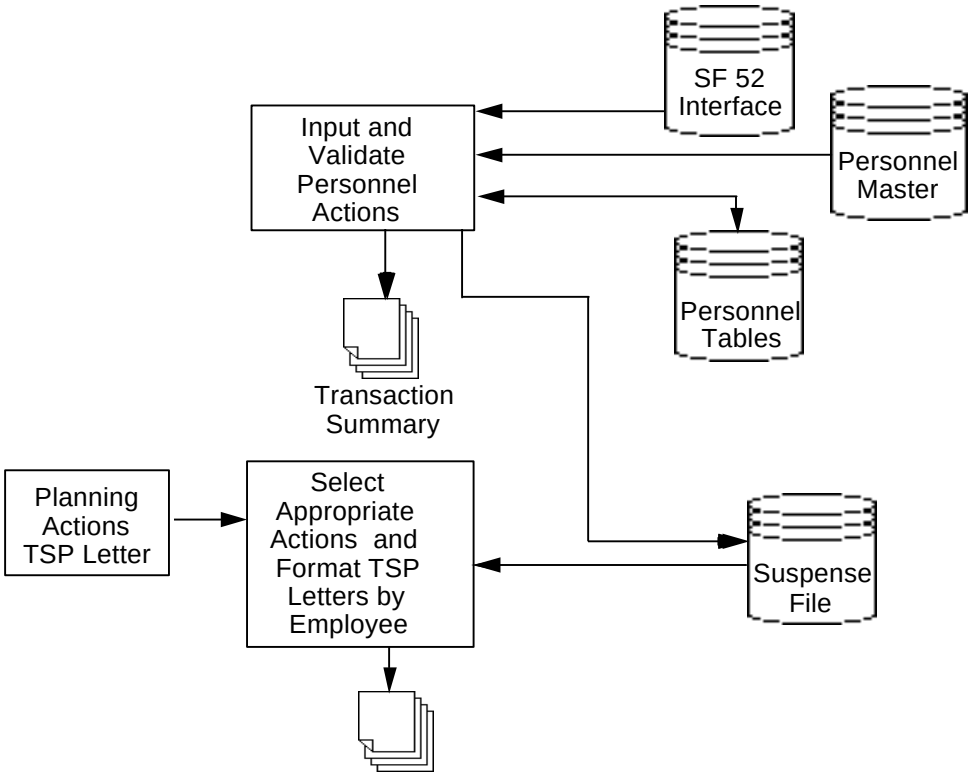

Figure 2.1.2-2 Planning Action Process and TSP Letter Process

Mass actions, similar to individual personnel actions, are applied against an entire group of employees versus a single employee. For example, a large number of employees transferring from one organization to another may be processed as a group, via the mass transfer capability, rather than individually. Not all personnel actions may be executed as mass actions. Section 4.1.9 provides more detailed information regarding mass actions.

For each personnel action placed on the suspense file, an SF 50 or SF 52 is produced (refer to Figure 2.1.2-3). The SF 50 or SF 52 may be produced online (NE0SF50/NE0SF52) or via a batch process (NE00400/NE00410). The suspended SF 50 transactions are then matured according to their effective dates. Mature transactions may be executed online or through a batch procedure (NE00008). See Appendix C for reports produced as a result of mature processing (refer to Figure 2.1.2-4).

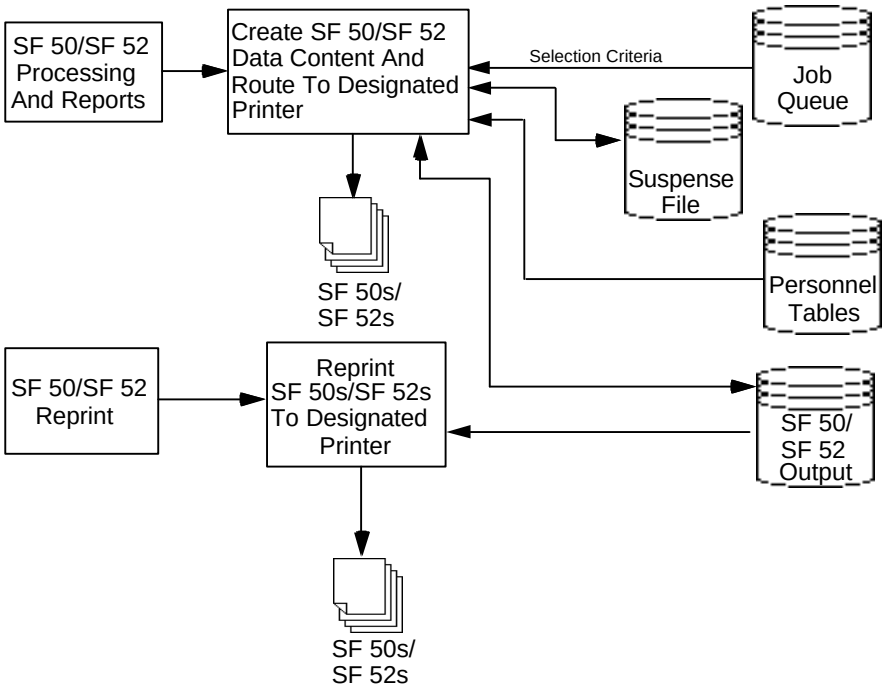

Figure 2.1.2-3 SF 50/SF 52 Processing

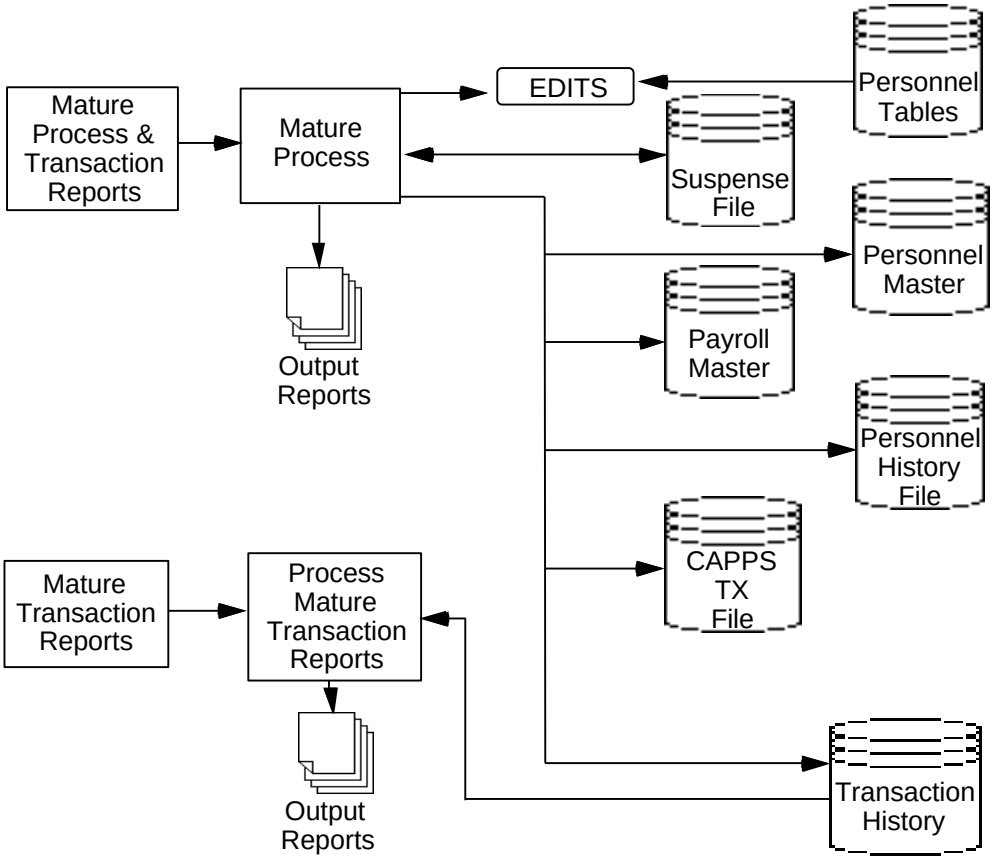

Figure 2.1.2-4 Mature Processes

Once matured, the actions update the master employee records and generate related core reports. Certain reports may be run daily to maintain a transaction audit trail of the daily activities. See Appendix C for the Daily Reports (NE00003).

2.1.3 Biweekly Pay Process

The Biweekly Pay Process is supported by payroll processing and is further divided into the Offweek and the Payweek. During the Offweek the employee master records are updated via payroll employee actions. Personnel mature is locked out during Payweek. At this time, pay is computed and final pay products are produced. At the end of Payweek, the payroll master file is initialized.

2.1.3.1 Offweek

During Offweek, the installation prepares to compute the pay of its employees (refer to Figure 2.1.3.1-1, Offweek). Each data entry professional has a payblock. At times, the members of a payblock must be reorganized because auditors limit the amount of time a given professional may maintain the same employee records.

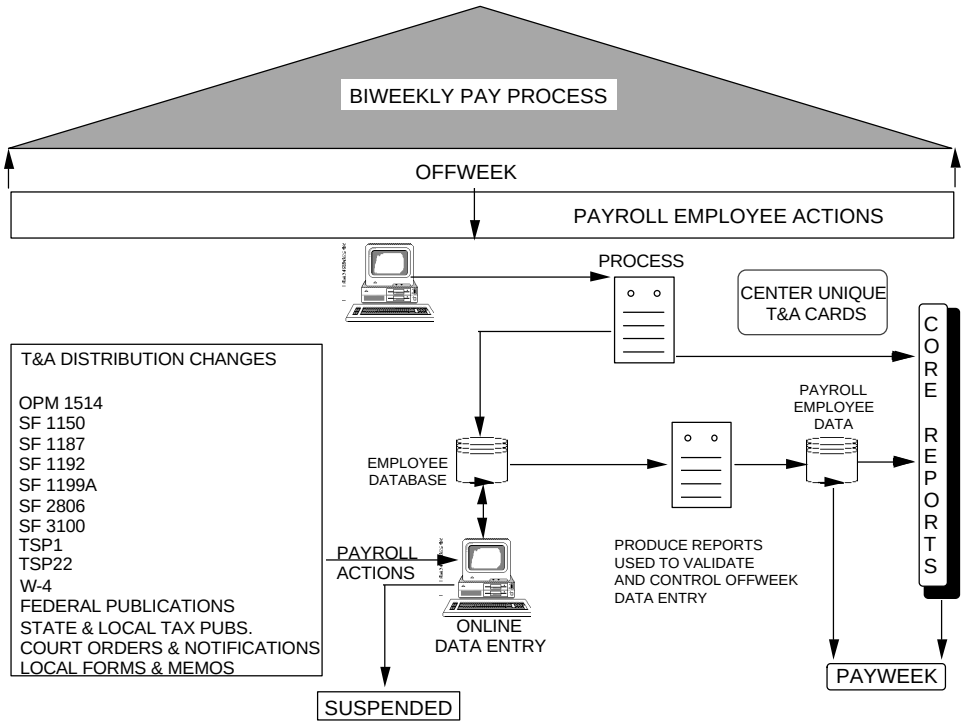

Figure 2.1.3.1-1 Offweek

The Payroll Mature Process for the pay period is executed to apply transactions on the suspense file for the current pay period to the employee master records and to recompute normals. The transaction history file then captures these matured transactions and produces the Transaction Report for payroll.

The personnel mature is unlocked so all actions affecting any employee's payroll may be input by both personnel and payroll and then matured. Payroll actions result from the following.

- Time and Attendance (T&A) distribution changes
- OPM1514
- SF 1150
- SF 1187
- SF 1192
- SF 1199A
- SF 2806
- TSP1
- TSP22
- W-4
- Federal Publications
- State and Local Tax Publications
- Court Orders and Notifications
- Local Forms
- Memos

Reports are then produced to validate and control the Offweek data entry. All reports are run individually at the request of the installation. All installations must produce T&A cards and/or labor distribution cards. NPPS does not support labor (i.e., no labor codes are included in the core capabilities).

2.1.3.2 Payweek

During Payweek, the installation computes its employee pay and produces payroll (refer to Figure 2.1.3.2-1, Payweek). At this time, personnel mature is locked out so payroll can baseline the normals and calculate the pay. The T&A process is provided to the payroll office via the transient storage pool area in a flat file format. Each center uses their own T&A process.

The CPO technical team runs a TSO submit job which updates the T&A in NPPS. No center is allowed to enter time into the system, unless it is for Errors and Missing timecards.

Initialization is the final step in the Payweek process.

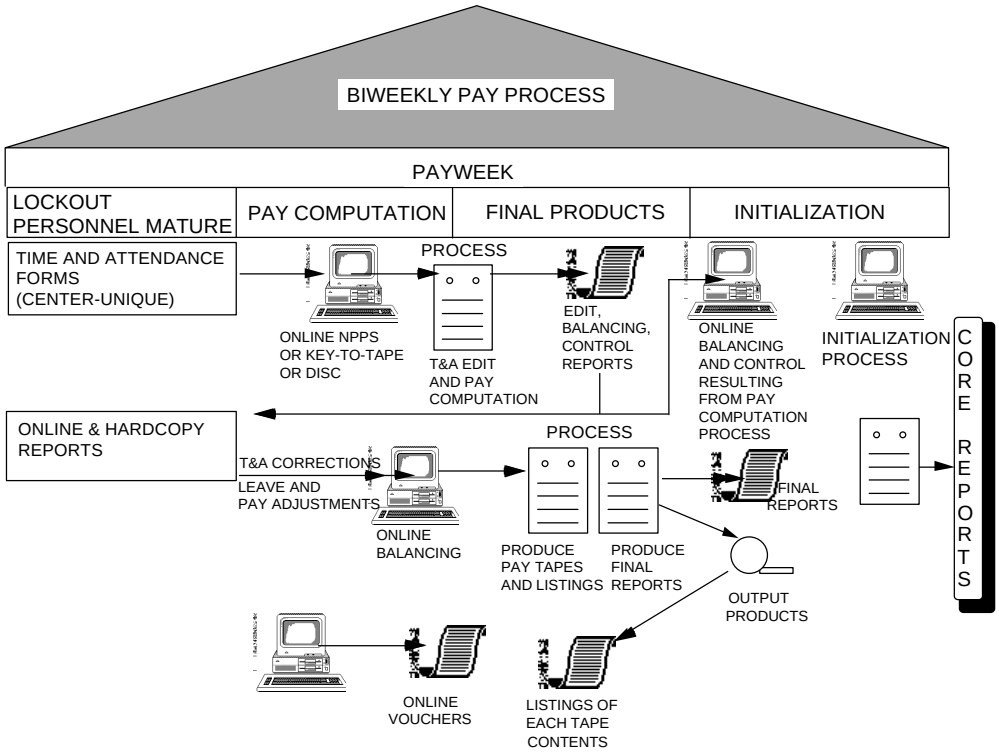

Figure 2.1.3.2-1 Payweek

The Payroll Batch T&A process (CA00003) is a core batch job which edits T&A data and reported hours when data is entered into the T&A file via batch processing. If the T&A data for an employee passes the edits, NPPS computes the T&A pay record for the employee. If the T&A data for an employee does not pass the edits, NPPS creates a T&A pay record and flags it as being in error. If T&A data for an employee is missing, NPPS flags the employee's T&A pay record as missing. NPPS also generates LWOP and severance pay T&A pay records for employees missing T&A data. See Appendix C for reports produced as a result of the T&A batch process (see Figure 2.1.3.2-2, T&A Batch Process).

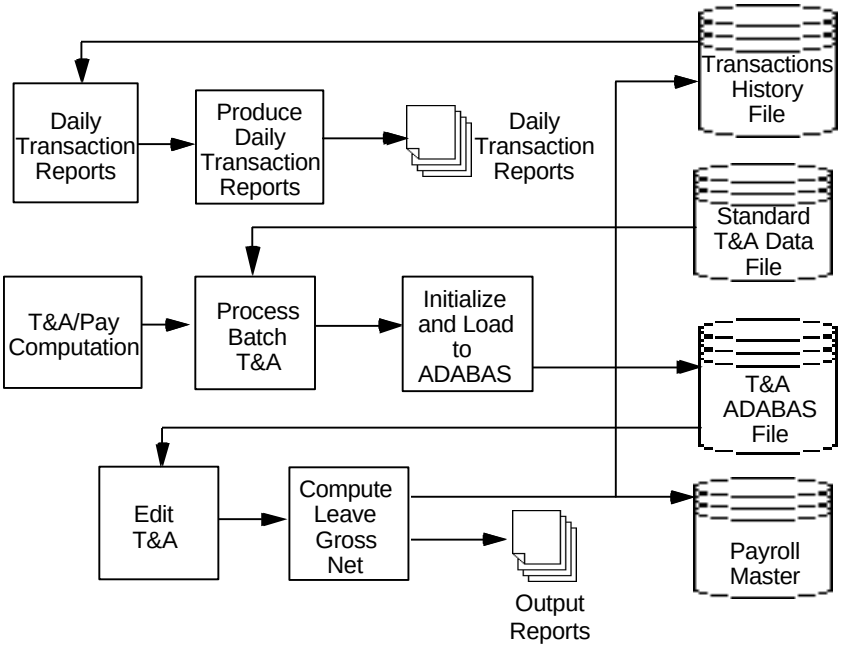

Figure 2.1.3.2-2 T&A Batch Process

After the T&A batch process is completed and errors are identified, the corresponding corrections are made online. If the T&A pay records are entered online, the errors are discovered by the system via normal online processing. Corrections are made immediately so T&A processing may continue.

After completing all error and missing timecard transactions, Payroll Final Reports (CA00004) is processed (see Figure 2.1.3.2-3). See Appendix C for output reports and/or products.

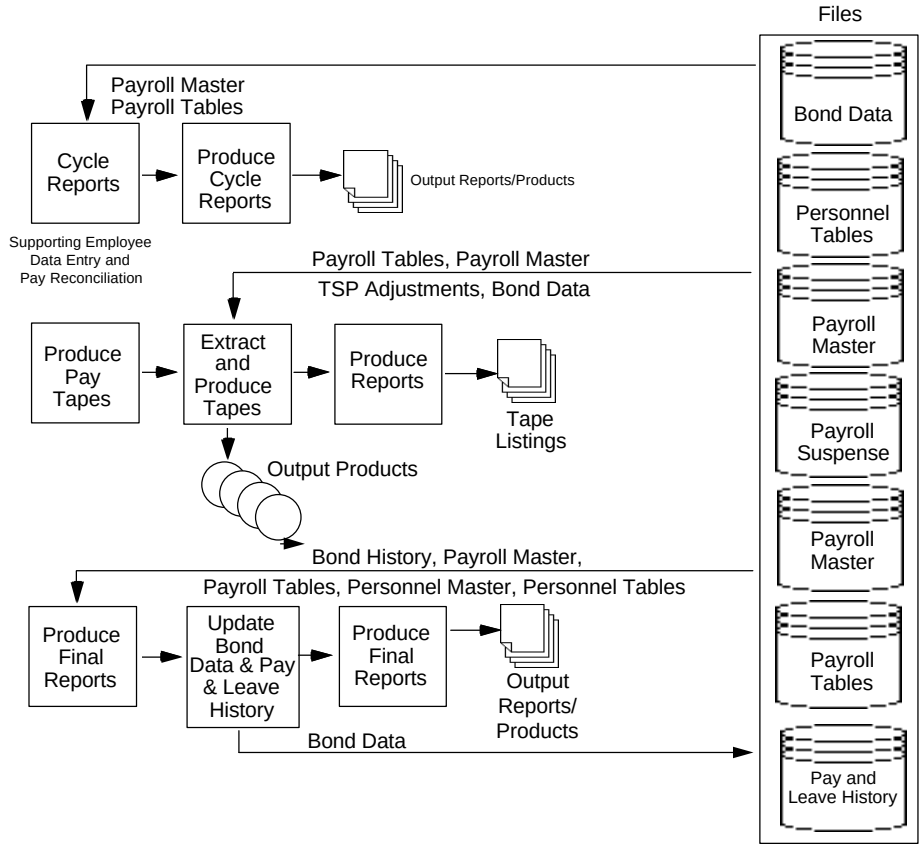

Figure 2.1.3.2-3 Payroll Final Products and Reports Processes

The final reports include all historical reports with all final balanced payroll data, plus the additional final reports which are sent to various agencies but are not required to produce the payroll. Appendix C provides a complete listing of all Payroll Final Reports.

Initialization occurs at the end of the pay period. During initialization (CA00006), the Gains and Losses Report (Core Report 505/R6071) is produced which informs each data entry professional of the employees gained/lost from his or her payblock. The employees are then reorganized according to the report and normals are equated. Payroll history files are updated. The nominal pay period data (i.e., reported hours) and transaction history file are initialized. The payroll process control data is updated. The previously matured payroll transactions are deleted from the payroll suspense file. The personnel log file is also initialized (refer to Figure 2.1.3.2-4, Initialization Process).

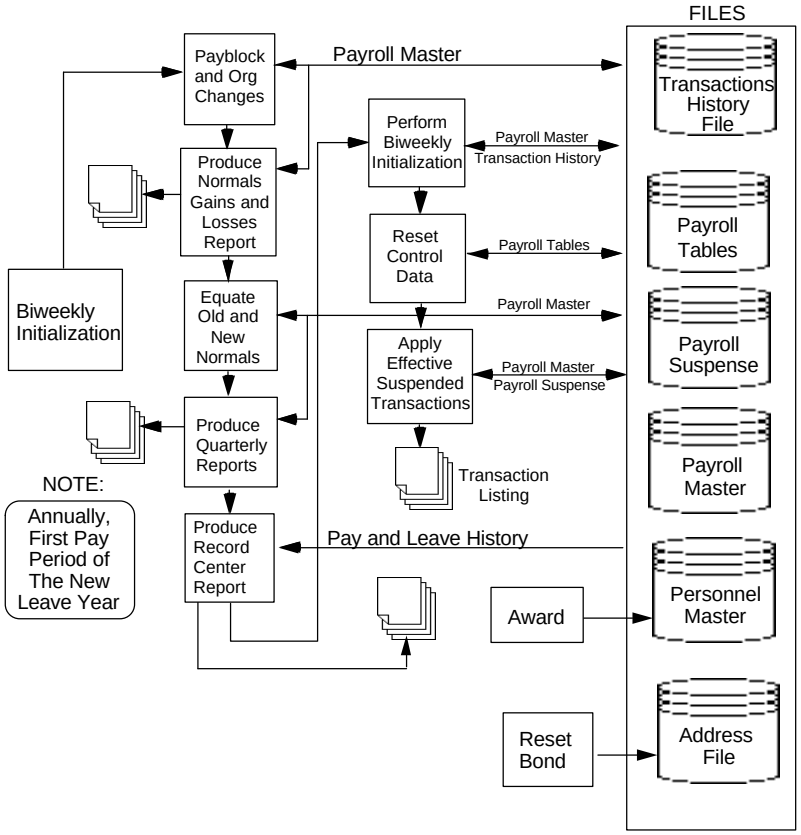

Figure 2.1.3.2-4 Initialization Process

SYSTEM CAPABILITIES

The processing described in the Operational Overview is accomplished through personnel processing, payroll processing, and personnel and payroll common processing functions. Following is a detailed description of the capabilities of each.

2.1.4 Personnel Processing

NPPS processes personnel data through a series of personnel actions. The system provides the capability to process all employee personnel actions described in the Federal Personnel Manual (FPM) by a Nature of Action Code (NOAC) and those identified by the agency (NOAC 900 series). (Refer to Figure 2.1.4-1, Personnel.)

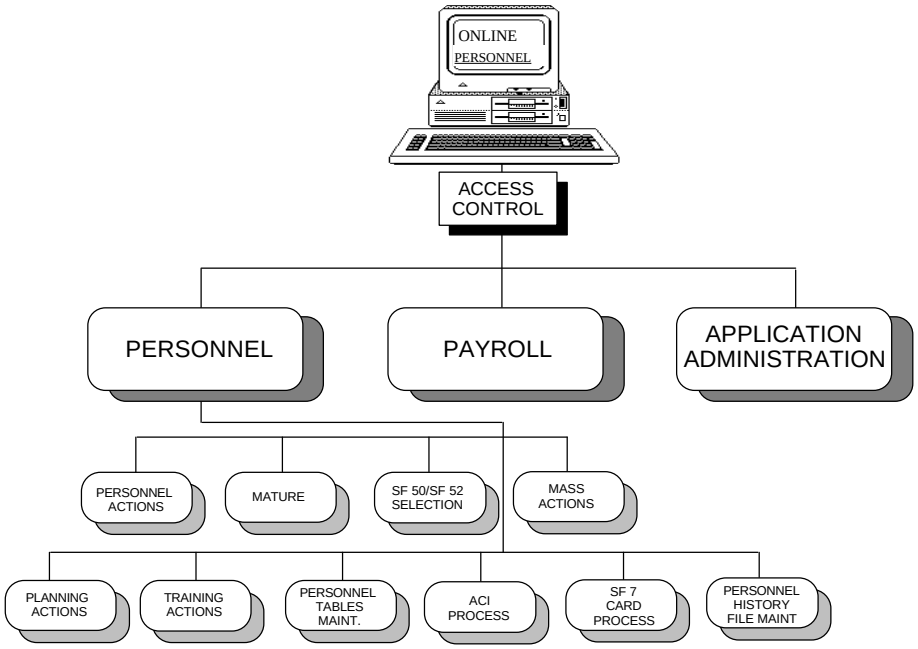

Figure 2.1.4-1 Personnel

During the processing of each NOAC, the list of those fields which are mandatory or optional input fields are displayed. Mandatory fields must be filled in so the action may be processed. Optional fields may be filled in if the information is relevant to the specific action being processed. As a result of this processing, a suspended personnel action is generated for each action.

Planning actions provide for advanced preparation of three specific personnel actions. The following personnel actions may be created and suspended for future maturation.

- WIG Increases (NOACs 891 and 893)
- Changes in Tenure (NOAC 880)
- Changes in TSP Eligibility (NOAC 996)

All information required for processing is available from the database or is system generated. Eligible employees are selected based upon the Eligibility Beginning and Ending Dates provided.

NPPS can generate suspended personnel actions for groups of employees which are defined. These actions are referred to as Personnel Mass Actions and include the following actions.

- Mass Transfers (NOAC 352)
- Furloughs (NOACs 471, 472, 473, and 772)
- Realignment (NOAC 790)
- Awards (NOACs 873, 874, 875, 876, 877, 878, 879, 885, 987, 988, and 989)
- Performance Rating (NOAC 990)
- Annual Comparability Increase (NOAC 894)
- NASA Class Code (NOAC 920)
- Change in Organization Name (NOAC 925)
- TSP Change (NOAC 943)

NPPS can print the SF 50 Notification of Personnel Action or SF 52 Request for Personnel Action for any employee action requiring an Office of Personnel Management (OPM)/NASA HQ NOAC. A dual SF 50/SF 52, two separate actions on the same SF 50/SF 52, may be printed for an employee having two or more personnel actions with the same effective date.

2.1.5 Payroll Processing

NPPS processes payroll employee actions and computes employee pay in accordance with the following publications (refer to Figure 2.1.5 -1, Payroll).

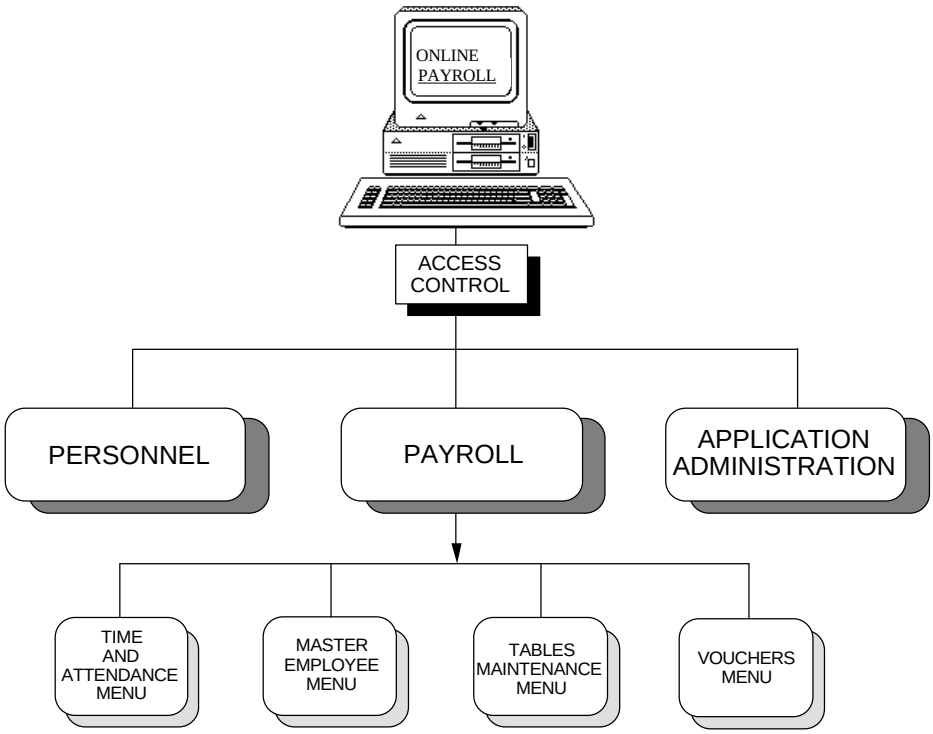

Figure 2.1.5-1 Payroll

- Federal Personnel Manual
- Treasury Fiscal Requirements Manual
- NASA Financial Management Manual
- NASA Management Instructions (NMI)

NPPS maintains the employee data necessary for computation of pay, maintenance of historical payroll processing results, and production of payroll products. The four categories of payroll action processing are as follows.

- Deductions
- Adjustments
- Administrative Employee Data
- Payroll Controls

NPPS computes leave and pay based on the entry of T&A data and payroll actions that affect current pay period earnings and deductions or leave balances. T&A data is the only source of current hours from which NPPS computes earnings. Each T&A transaction must pass field edits in order to be validated. NPPS computes the biweekly accrual of annual and sick leave and accounts for all paid and non-paid types of leave. NPPS computes the gross pay for each employee based on hours reported and/or from adjustments to base and gross earnings. NPPS computes the employee net pay by applying specific deductions from employee gross earnings.

2.1.6 Personnel and Payroll Common Processing

The processes described below are shared by personnel and payroll. The individual who administers these processes is referred to as the Application Administrator (refer to Figure 2.1.6-1, Application Administration).

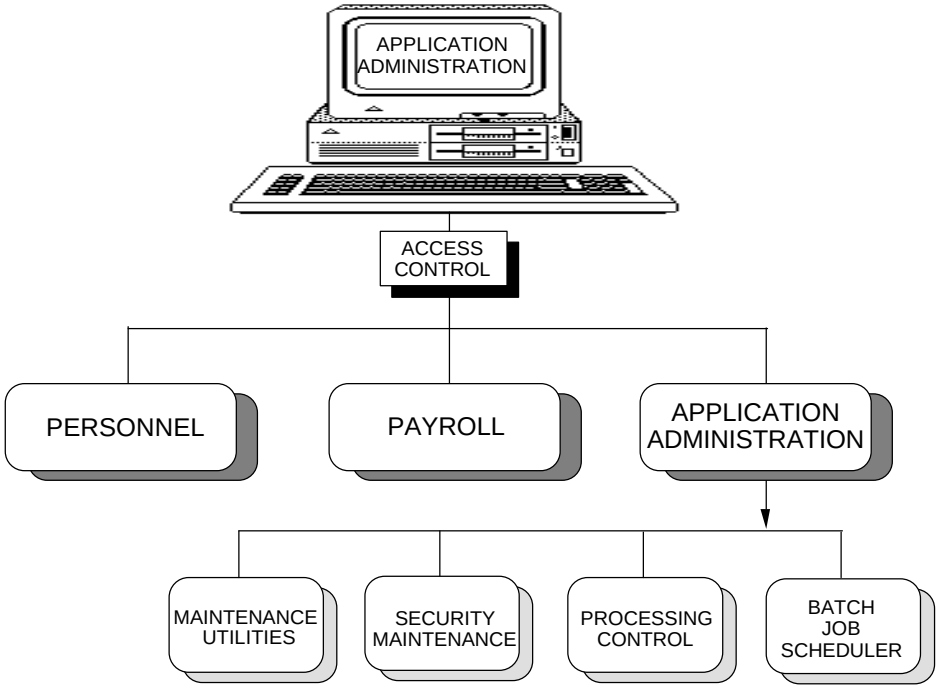

Figure 2.1.6-1 Application Administration

2.1.6.1 Database

Personnel and payroll processes access the same body of information. The NPPS database is organized in data categories based on data usage. The following table lists the categories (files) referred to in this document.

NPPS FILE DESCRIPTIONS

FILE NAME	CONTENTS
Personnel Master File	Contains employee information required by NASA HQ and represents the most current data for the employee based upon the last matured action.
Suspense File	Contains all transactions prior to their being matured. This file also includes all the information necessary to print the SF 50/SF 52 for the employee for each transaction. The only transactions which do not go to the suspense file are table updates.
Personnel Tables File	Contains the majority of the single field and relational edits supplied by HQ as well as all other tables as needed for use by the Personnel programs.
CAPPS TX File	Accumulates the transactions as they are matured and saves them for submission to CAPPS.
Personnel History File	Accumulates complete before and after images of the transactions as they are matured. These records will contain all of the fields stored in the Personnel Master File, as well as other identification information such as the action code and effective date of the action.
Payroll Master File	Contains employee information required to process payroll.
Payroll Tables File	Contains edit and computational data necessary for the computation of pay.
Pay and Leave History	Contains pay and leave information resulting from the pay processing for each employee for each pay period.
Transaction History	Contains the transaction data from Completed payroll update transactions and the NPPS information messages that were produced when the update transaction was processed, as well as an audit trail of all successfully completed transactions whenever any file is updated.
TSP Adjustments File	Contains the information needed to report the adjustments to an employee's Thrift Savings Plan deductions. The information is reported on the Thrift Savings Plan tape each pay period.
Address/Bond History File	Contains address information and the information required to process employee savings bonds after bond deductions computations.
Pay Suspense File	Contains payroll employee and table transactions (not T&A transactions) that are effective for a future pay period.

FILE NAME	CONTENTS
Job Directory File	Contains information that defines each batch job that can be executed using the NPPS Batch Job Scheduler.
Report Directory File	Contains information needed for report assembly and distribution for the reports that can be executed using the NPPS Batch Job Scheduler.
JCL Catalog File	Contains the job control language statements necessary to execute the jobs that have been defined to the NPPS Batch Job Scheduler.
Print Directory File	Contains the information necessary to identify the printers available to receive NPPS printed output produced from the batch jobs defined to the NPPS Batch Job Scheduler.
Job Queue File	Contains information about all NPPS batch jobs currently scheduled.
Log File	Contains program error information produced as a result of errors detected by ADABAS/NATURAL during execution of jobs using the NPPS Batch Job Scheduler.
Security File	Contains information defining the security profile of each individual that has been defined as a NPPS application user through the NPPS security maintenance function.
System Help File	Contains help information associated with all NPPS functions.
System Release File	Contains help information associated with new and/or modified capabilities that are being implemented in the latest NPPS software release.
System Table File	Contains such tables as the NPPS command table, as well as other tables which are of common use to both personnel and payroll processes.

Table 2.1.6.1-1 NPPS File Descriptions

2.1.6.2 Access Control

NPPS is a sensitive data processing application requiring special attention to system and data access. The user gains access to employee data through NPPS security. NPPS security is provided at the transaction level for each user. The user requires separate authorization for viewing or updating system data. Authorization is granted by a system administrator or authorized system user through the security administration functions provided by NPPS.

Each employee within the database is identified by social security number (SSN) and installation code. Access to employee data is limited to a single installation code for remote centers and multiple installations for the CPO office. An individual may not process an action against his/her own SSN.

2.1.6.3 Help Facility

The diversity of professionals who use the complex structure of NPPS requires that assistance be available to system users at all times. The help facility is available online to the system user from any NPPS process. The NPPS user is authorized, through the security administration function, to maintain the help information at the installation.

2.1.6.4 Suspended Transactions

Employee transactions may be collected and saved for future application to the database. Multiple transactions may be suspended for the same employee, whether or not the transactions have the same effective date. The sequence in which the transactions are to be applied to the database for those transactions with the same effective date may be specified. Any suspended transaction maybe viewed, modified, or deleted.

2.1.6.5 Transaction Mature

Suspended transactions may be applied (matured) for all employees or selected employees based on the effective date specified. The maturation of the suspended transaction will update each employee's current master record.

All suspended transactions with an effective date on or before the date specified will be matured. All actions meeting the date criteria or only those actions for specific SSNs meeting the date criteria. Suspended transactions currently stored in an error condition will not be matured. NPPS automatically edits a suspended action unless it is specified that edits are to be bypassed (personnel actions only). If an action fails an edit, NPPS places the action in an error status and all subsequent actions for that SSN will not be applied to the employee master record (personnel actions only). Whenever this situation occurs, a message regarding the error condition will be received. Each employee record reflects the most current information as of the last transaction matured.

2.1.6.6 History

The results of database updates are captured to meet the three historical data requirements.

- Pay and leave history by pay period for each employee
- Personnel action transaction history for each employee
- Transaction audit trails of NPPS database maintenance

NPPS creates a cumulative pay and leave history for each employee for each pay period. This history includes all pay results and leave balances resulting from the pay period process, including pay adjustments.

Historical information is retained on all personnel transactions. Amy historical data may be retrieved, modified, or deleted. At the time a personnel transaction is matured, a complete before-and-after image of the employee's data is captured and saved for historical purposes. This historical record includes the date the transaction matured, the employee's time in grade, and the employee’s age when the transaction became effective.

Maintenance of any employee's personnel historical record(s) is based on the employee's SSN, the NOAC, and the effective date of the transaction. Any field within the record may be modified, including both the before-and-after images, and the entire record may be deleted.

NPPS retains a history of all transactions which have updated the database including the transaction values, an identification of the type of transaction, the date of the transaction, and the transaction indicator.

2.1.6.7 Year-End Processing

During Fiscal Year-End processing, NPPS initializes the military leave days accumulations to zero and carries over unused days between 1 and 15 for use in the following fiscal year.

During Pay Year-End processing, NPPS produces reports and output products (see Appendix C for the listing). The system also initializes all YTD earnings accumulations and deductions accumulations to zero.

During Leave Year-End processing, NPPS initializes leave YTD hour accumulations and leave cost accumulations to zero. The system also sets the amount of annual leave to be carried forward to the new leave year equal to the annual leave balance, provided that the balance is equal to or less than the annual leave ceiling. If the employee ceiling is greater than 240 hours (720 hours for Senior Executive Service [SES] [Pay Plan = ES] employees) and the balance is less than the ceiling, NPPS computes the new ceiling equal to the employee balance. For SES employees converted during the leave year, only the leave accrued prior to conversion in the current leave year will be subject to the 240-hour ceiling requirement.

NPPS initializes expired restored leave to zero and may delete all inactive employees from the database. The system also initializes the biweekly CFC deductions to zero.

2.1.6.8 Reporting

Due to the volume of data to be processed, NPPS must provide a method of processing bulk input and output. The system provides online and batch access to the system database containing personnel and payroll data. The online system is composed of the following three primary segments.

- Personnel
- Payroll
- Administrative

The personnel segment of the system contains all processing components required to add, maintain, and delete personnel data in the system. The payroll segment of the system contains all processing components required to process payroll for active personnel. The administrative segment of the system contains functions required for the authorized system user to access system components, maintain system table values, update help information, and perform other miscellaneous functions required in controlling user access.

Batch processes accommodate hardcopy output reports and input of large volumes of data to be processed by NPPS. A core set of reports is maintained by NPPS. These core reports contain processing information, employee information, management information, and regulatory reports as specified by NASA, the Office of Management and Budget (OMB), the OPM, and the US Department of Treasury. The core report formats are defined in the System/Software Requirements Specification for the NASA Personnel/Payroll System.

2.1.6.9 Batch Job Scheduling

NPPS allows the user to control the execution of the batch job process by selecting a batch process for execution, obtaining status for a previously elected batch process, and defining the order of batch process execution (refer to Figure 2.1.6.9-1).

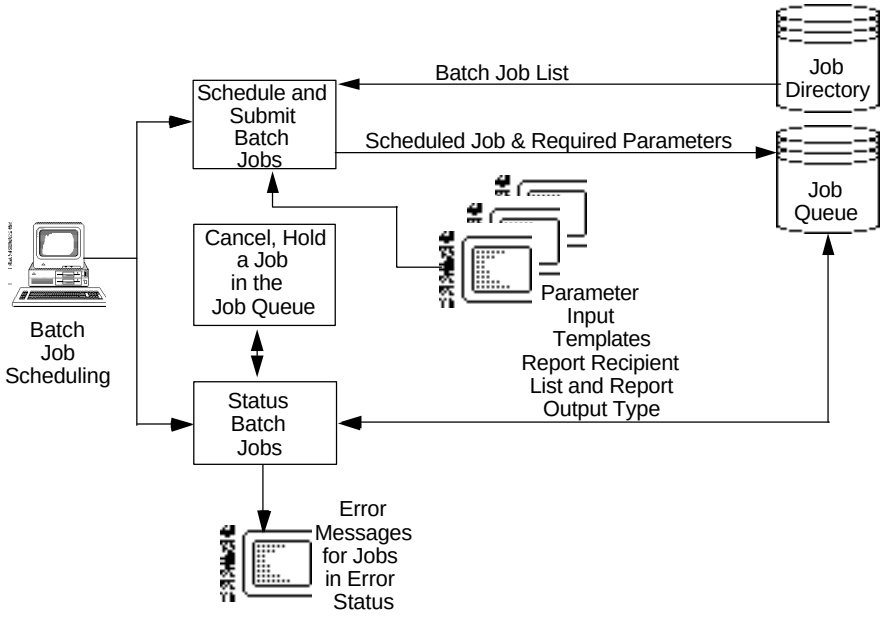

Figure 2.1.6.9-1 Batch Job Scheduler

2.1.6.10 Ad Hoc Reporting

Adhoc queries and unique reports for obtaining information from the NPPS database may be developed. This is accomplished through use of SUPER NATURAL, produced by Software AG.

2.1.6.11 Processing Controls

Through processing controls, the user is able to specify the routing of all hardcopy output, control the application of employee updates to the database, and schedule and obtain status for batch processes.

NPPS enables the user to assign available installation network printers for the purpose of routing hardcopy reports. Report assembly and distribution information including recipient name, location, assembly instructions, and number of copies may also be defined and maintained.

The database may be locked and unlocked for the purpose of preventing the application of suspended employee transactions to the database.

2.1.6.12 Interfaces

Standard external interfaces to other government agency systems are accommodated in NPPS. Standard interface file formats defined by these agencies are used for all data transfer between the agencies. NPPS provides output and input interface file formats for each standard interface application.

NPPS must provide a standard interface for the following external systems.

- US Department of Treasury
- SSA
- US Department of Agriculture (USDA) National Finance Center
- CAPPS
- NEBA
- HHS
- California State
- Federal Reserve Bank - Pittsburgh

3 USER INTERFACE

NPPS is a system for maintaining employee information for use with both personnel and payroll functions. Each piece of information regarding an employee is called data. The collective body of information regarding all the employees at the installation is called the database. NPPS enables the user to view or change the contents of this database by controlling the way data is entered (menus and templates) and the way data already in the database is viewed (screen displays and printouts).

Your terminal or personal computer is the tool used to enter data. It is connected to the larger storage and processing device, the mainframe computer, where the NPPS and its database are stored. When you enter information, it first appears on the screen. Then, when you press **ENTER**, it is transmitted to the mainframe where it is processed by NPPS.

When you request information, it is retrieved from the database and sent to your screen for display. Also, when you request a printed copy of information, the information is retrieved from the database, but is sent to a printer rather than the screen of your terminal or personal computer.

3.1 System Access

Before using NPPS, you will need to obtain a terminal or personal computer. In addition, you will need an access identification by which the system may recognize you as an authorized user. This access identification is called a system ID.

You will also need a password which enables the computer to verify you are the valid user of that system ID. Finally, you will require a NPPS userid and temporary password, which will be assigned by an Application Administrator. The NPPS userid will define your access privileges (i.e., update or view information).

3.1.1 Logon and Logoff Procedures

In order to communicate with NPPS, you must use a terminal or personal computer that is attached to the mainframe via a cable, or you may connect to the mainframe by using a phone line. The process of establishing communications with NPPS is referred to as logging on. Therefore, the set of steps to establish this communication is referred to as the logon procedure. To end the communications, you will use the logoff procedures.

Both the logon and logoff procedures are different for each installation. You should obtain these procedures from your NPPS Application Administrator.

3.1.2 Valid System ID and NPPS Password

One of the first steps in logging on will be to type your system ID and password. The remaining steps will eventually bring you to the NPPS Main Menu. At this point, you will need to type your NPPS userid and password which identifies you as a valid user of the NPPS.

The NPPS userid represents your NPPS security profile. This profile establishes the tasks you may perform while using NPPS, such as entering a personnel action or editing a T&A card. If you attempt to access a menu or template which you are not authorized to view or use, NPPS will prohibit you from moving to the designated screen or processing the desired action. You will receive a message stating you have requested a template or action for which you do not have authorization.

When you logon to NPPS for the first time, you will be required to change your temporary password assigned to you by the security administrator. A password is valid for sixty days. When the sixty days are up, you will be required to change your password. Your new password cannot be the same as your current or previous five passwords. You can also change your password from the NPPS Main Menu by pressing **PF2** and entering your current password and your new password (twice for verification).

You may view your own security profile in order to learn which tasks you are authorized to perform. For detailed procedures, refer to Section 4.3.1.1.

Your logon and logoff procedures should be included in Appendix E, along with any other information regarding special situations at your installation. Printing procedures are examples of other site-unique information. Though NPPS provides a universal means by which to request a printed copy, your installation has special printers in specific locations.

3.1.3 Agency Payroll Consolidation Logon

Designated personnel from the Consolidated Payroll Office (CPO) will be identified by a special set of NPPS user identification codes. (See Security Maintenance, 4.3.1.1). CPO users will use their CPO identification to execute and monitor APC batch jobs. Logging on to NPPS, as a CPO user for the purpose of submitting or monitoring batch APC batch jobs, requires that “NASA” be entered into the unprotected field in the upper left hand corner of the screen under the “COMMAND” line on the JOB SCHEDULER MAIN MENU (BJSMM). Having logged on as a CPO user and entered “NASA” into BJSMM, the menu selections made from BJSMM will be as a CPO user.

When scheduling a CPO job, the last parameter screen that will be seen will be a center selection screen that will automatically be presented for center selection(s). One or more centers may be selected. (See Appendix F, NPO950PA - CPO CENTER SELECTION SCREEN, for a description of this parameter screen’s use.)

3.1.4 Agency Leave and Earning

The Consolidated Payroll Office will be responsible for producing the leave and earning print file for each center. The job is treated as a non-consolidated process and resides on each center's core NPPS BJS as a "CA" job name. The leave and earnings statement jobs will be executed at the consolidated site and printed at the appropriate center.

3.2 System Layout

The following sections contain details of the system layout.

3.2.1 Menus and Templates

NPPS provides two types of screens: menus and templates. Menus assist the user when moving through the system and provide a means for selecting a NPPS capability. Templates accept information to change, edit, or update employee records.

3.2.1.1 Menus

NPPS contains a number of menus which guide you through the system. Each menu lists several numbered items from which you may select. These items may be other menus or may be templates. Make a selection by entering the number of your choice and pressing **ENTER**.

The following warning screen is presented when you first enter the NPPS environment. Press **ENTER** to advance to the NPPS Main Menu or **PF12** to quit.

```
NPO0000                                                                91-09-09
      ** ALERT** ALERT** ALERT** ALERT** ALERT** ALERT** ALERT** ALERT*

                 THE NASA PERSONNEL PAYROLL SYSTEM CONTAINS

                        PERSONAL AND FINANCIAL DATA

            PROTECTED UNDER THE PRIVACY ACT OF 1974 AND NMI 1382.17

    *** YOU MAY USE THE DATA ONLY TO PERFORM YOUR OFFICIAL DUTIES

    *** YOU MUST TAKE CARE TO ENTER ONLY CORRECT INFORMATION INTO NPPS

    *** YOU MUST NOT LEAVE YOUR WORKSTATION UNATTENDED WHILE LOGGED ONTO NPPS

    *** HARDCOPY OUTPUT OF EMPLOYEE DATA MUST BE PROTECTED AND DISTRIBUTED
        ONLY TO AUTHORIZED INDIVIDUALS

                  PRESS ENTER TO CONTINUE THE NPPS LOGON
                             OR  PF12 TO QUIT

      ** ALERT** ALERT** ALERT** ALERT** ALERT** ALERT** ALERT** ALERT*
```

NPPS Privacy Act Warning Screen

The NPPS Main Menu is the first screen displayed when you establish communications with NPPS. This screen provides four choices: (1) Personnel, (2) Payroll, (3) Application Administration, and (4) Exit to Super Natural.

You use this menu to access the three subsystems of NPPS, represented by the first three choices. You also use this menu to access Super Natural, the fourth choice.

A CPO user enters their CPO USER-ID and password to access the main menu and will have an option later to select the specific center to be accessed.

```
                                    NPPS
NPO0000                    M A I N   M E N U
--------------------------------------------------------------------------------
               CENTER ID:         NPPS VERSION:

    ENTER YOUR NPPS USERID, PASSWORD AND ONE OF THE FOLLOWING SELECTIONS:

                              1 - PERSONNEL

                              2 - PAYROLL

                              3 - APPLICATION ADMINISTRATION

                              4 - EXIT TO SUPER NATURAL

                              SELECTION: _

             NPPS USERID  ________   NPPS PASSWORD  ________

--------------------------------------------------------------------------------
  PF1= HELP                   PF2= CHANGE PASSWORD                   F12= END
```

NPPS Main Menu

3.2.1.2 Templates

Templates include a number of blank spaces, or fields, where you enter data. For personnel or payroll actions, you start by identifying the employee. Then you enter the information required in order to add, change, or delete the record of the employee you have identified. When you have entered all the necessary information, press **ENTER** (or its equivalent key) to process the data on that template. Some actions require you to fill in a set of related templates which are linked together. This set is called a chain.

The first template is the following Personnel Actions template. In order to use this template, you enter the required information regarding the employee (SSN or last name) whose record you want to update, the type of action (NOAC) you want to perform, the effective date of the action, and the desired function. Then press **ENTER**. NPPS will display a set of templates, or chain. You fill in the required information on each template and press **ENTER**. This will call up the next template in the chain.

After you fill in all the templates in the chain and press **ENTER**, the action is completed. NPPS will display a message stating you have succeeded in placing this action on the suspense file, and you will be returned automatically to the Personnel Actions template. For more detailed information on the use of this template, refer to Section 4.1.1.1.

```
COMMAND: ________                    NPPS
NEO1001         SF 50 PERSONNEL ACTION PROCESSING MENU - PERACT
-----------------------------------------------------------------------

 SSN: ___ __ ____  NOAC: _____  EFDATE: __ __ __  FUNC: _
 NAME(LAST,FIRST):  ______________________   ____________

      FUNCTION                DESCRIPTION

         A            ADD THE ACTION TO SUSPENSE
         C            CHANGE AN EXISTING SUSPENSE ACTION
         D            DELETE AN EXISTING SUSPENSE ACTION
         E            CHANGE THE EFDATE OF AN EXISTING SUSPENSE ACTION
         H            CHANGE SSN ON ACCESSION ACTION
         R            RETRIEVE AN EXISTING SUSPENSE ACTION
         S            RE-SEQUENCE SUSPENSE ACTIONS
         T            CONVERT SF52 ACTION TO SF50 ACTION



 ---------------------------------------------------------------------------
  PF1= HELP                  PF5= MAIN MENU                    PF12= END
```

Personnel Actions Processing Menu

The second template is the following T&A Edit template, which represents the online version of the employee's official pay record. In order to use this template, identify the employee whose T&A information you want to add or update. This is completed by entering the employee's SSN and payblock. Next, enter the function you want to perform and all the information required in order to update this employee's pay record.

When you press **ENTER**, NPPS updates the employee's pay record according to your changes. For more detailed information on the use of this template, refer to Section 4.2.3.1.1.

```
* SPECIFY NEW PAYBLOCK AND SELECTION, OR USE PF KEYS

COMMAND: ________   NPPS - OFFICIAL PAY RECORD - TAEDIT
NAO3100  ----------------------------------------------------------------------
FUNCTION _ SEL _   PAYBLOCK __ SSN ___ __ ____ EMP#          CMPRSD WEEK(Y/ ) _
LAST NAME ________________________ FIRST _____________  MI _    DATE
        REG    OT     ND     CTE    HOL    SD     HD          CD  OTH  CD  OTH
WEEK1 ______ ______ ______ ______ ______ ______ ______        _ ______ _ ______
SH: _   AL     SL     CTU   LWOP   SUSP   AWOL   HOL    RST  _ ______ _ ______

      ______ ______ ______ ______ ______ ______ ______ ______
        REG    OT     ND     CTE    HOL    SD     HD          CD  OTH  CD  OTH
WEEK2 ______ ______ ______ ______ ______ ______ ______        _ ______ _ ______
SH: _   AL     SL     CTU   LWOP   SUSP   AWOL   HOL    RST  _ ______ _ ______
      ______ ______ ______ ______ ______ ______ ______ ______ LAST SHIFT WRKD _
****************************** BIWEEKLY TOTALS ********************************
WORK  ______ ______ ______ ______ ______ ______ ______        FACILITY CODE:
LEAVE ______ ______ ______ ______ ______ ______ ______ ______
OTHER-  J ______  M ______  A ______  G ______  E ______  C ______  T ______
 LEAVE  I ______  H ______  Y ______  D ______  Z ______  R ______


-------------------------------------------------------------------------------
FUNCTION: B= BLOCK TOT  C= CHANGE  H= HUNDRED TOT  N= NAME SRCH  S= SPLIT SHIFT
  PF1= HELP  PF2= MORE MESSAGES  PF3= PREV SCREEN  PF5= MAIN MENU  PF12= END
```

T&A Edit

3.2.2 Screen Conventions

Though all the menus and templates have different names and functions, certain features regarding their layout are consistent. Each screen can be divided into three main parts as shown on the following menu. These parts are (1) the title information which is located above the top dotted line, (2) the function and Program Functions (PF) key information which is located below the bottom dotted line, and (3) the user input area which is located between the two dotted lines.

```
COMMAND: ________                    NPPS
NEO0000                  PERSONNEL MAIN MENU - PERMM
-------------------------------------------------------------------------------

                   CENTER ID:         NPPS VERSION:

                   ENTER ONE OF THE FOLLOWING SELECTIONS: __

                     1 - PERSONNEL ACTIONS
                     2 - PLANNING ACTION
                     3 - MATURE PROCESS
                     4 - SF-50/SF-52 PROCESSING
                     5 - TABLES MAINTENANCE
                     6 - ACI
                     7 - MASS ACTIONS
                     8 - EMPLOYEE SERVICE RECORD
                     9 - PERSONNEL HISTORY FILE MAINTENANCE
                    10 - PERSONNEL AUDIT BROWSE

-------------------------------------------------------------------------------
 PF1= HELP                      PF5= MAIN MENU                      PF12= END
```

Screen Conventions

3.2.2.1 Title Information

COMMAND LINE - At the top left is the Command Line. To move your cursor to this line, press the **HOME** key. The Command Line provides one of the system navigation options and is further explained in this section. Immediately below the Command Line is the program identification which identifies each screen. As a functional user of NPPS, you will not need to use this unique screen code.

TITLE - The menu/template title always appears at the top center of the screen. Immediately following the title is its abbreviated name or, as it is referred to by NPPS, the template ID. This ID is used to identify the template when the user needs to move to it directly via the command processing capability by entering this acronym on the command line and pressing **ENTER**.

DATE/TIME - The date and time are displayed at the top right of the screen. Every time you move from one screen to another, you will see that the time has updated automatically. The number appearing immediately below the date and time is the Processing Time Indicator. This indicator displays the number of seconds between the time NPPS initiates and completes its processing on the

mainframe. The Processing Time Indicator provides information relative to your mainframe's processing performance.

3.2.2.2 Functions and PF Keys

At the bottom of the screen are the functions and PF keys which accompany the specific menu or template you are viewing. The functions are available only on templates because they are used to identify the type of action you want to perform for a specific employee record (i.e., add, change, retrieve, or delete). The functions available are described in conjunction with each template. The four functions available for most templates are as follows.

(A) Add

(C) Change

(D) Delete

(R) Retrieve

The PF keys available will also vary from one menu/template to another. However, there is a group of four standard PF keys which appears on most menus and templates. These standard keys are as follows.

PF1 = Help

PF3 = Previous Screen

PF5 = Main Menu

PF12 = End (must be pressed twice for confirmation)

In addition, two keys are provided which allow you to move between the pages of a template composed of more than one screen. These two keys are PF7=Backward and PF8=Forward. All other PF keys will be described in conjunction with their corresponding screens.

3.2.2.3 User Input Area

The contents of the middle section of each menu or template vary according to the purpose of the screen itself. However, the user input area of each screen contains one or more of three types of fields: (1) mandatory fields in which you must enter information, (2) optional fields in which you may choose whether or not to enter information, and (3) display fields in which you may not enter information.

Mandatory inputs vary according to the task you are performing. The mandatory fields are highlighted by NPPS so you can easily identify them. If you neglect to complete a mandatory field, NPPS will return the cursor to this field after you press **ENTER**. NPPS will also display a message which reminds you that you must complete this field before proceeding with the task.

All templates require you to enter the SSN of the employee whose master record is to be added, changed, or deleted. If you want to do any action other than retrieve information which already exists in the master record, you must also change the function code (FUNC). Personnel templates may require a NOAC and action date (ACDATE) as well.

If your monitor has a color display, the mandatory entries are displayed as white, and the optional entries are displayed as green. Those fields which you may not change are displayed as blue.

3.3 Navigation Techniques

The following sections describe the navigation techniques.

3.3.1 Menu Choices

Menus allow you to select the particular path you want to travel. You pass from one menu to the next until you arrive at the proper template. For instance, if you want to arrive at the Personnel Actions template from the NPPS Main Menu, you would follow the path outlined in FIGURE 3.3.1-1, Menu Navigation.

1. At the NPPS Main Menu, select **1** - Personnel and press **ENTER**.

2. At the Personnel Main Menu, select **1** - Personnel Actions and press **ENTER**.

3. At the Personnel Actions Menu, select **1** - Personnel Action Processing and press **ENTER**.

Navigating via the menus is helpful for individuals who are learning NPPS. However, the experienced NPPS user may find the command line a more efficient method of navigation.

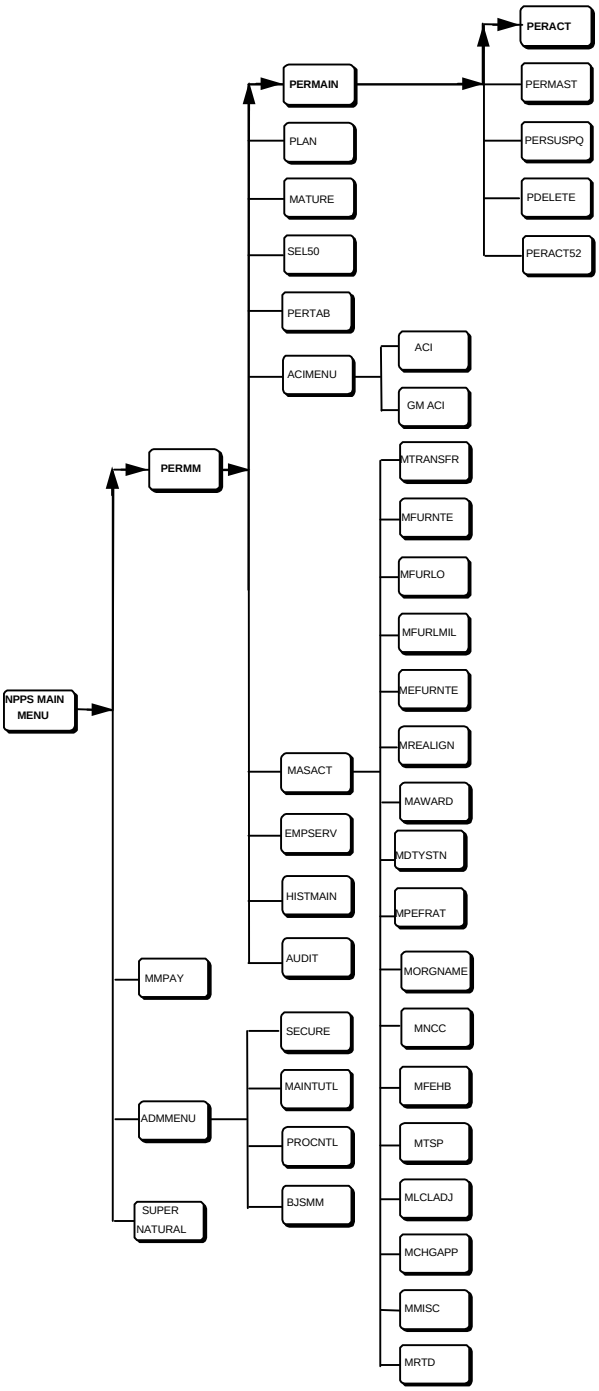

FIGURE 3.3.1-1 Menu Navigation

3.3.2 Command Line

The command line is located at the top, left corner of each screen, as displayed in the following example. At the command line, you can enter either a template ID or a key word. Either type of command tells NPPS where you want to go without stepping through layers of menus.

```
                                                                    89-04-18
COMMAND: ________                NPPS                               11:28:40
 NEO0000                PERSONNEL MAIN MENU - PERMM
 ---------------------------------------------------------------------------
```

Command Line

To use this method for navigating to the screen of your choice, first press the HOME key to move your cursor to the command line. Then type in the template ID of key word that represents your desired location. Finally, press **ENTER** to execute and move to your desired location. You will notice that the NPPS Main Menu does not have a command line. This is because you must first select and enter one of the four subsystems before proceeding to its accompanying menus and templates. Also, you may not use the command line to move to a menu or template which you are not authorized to use.

The template IDs are abbreviations of the individual menu and template titles. Each screen has an abbreviated name immediately after its full title. The screen title and abbreviated name are always centered at the top of each screen.

The key words are available as an alternative to PF keys. They represent the direction in which you may move or the location to which you may move. Certain key words tell NPPS that you want to cease the application and return to the mainframe operating system. These words are FIN, END, and STOP. Other words enable you to return to the main menu, such as MAIN, MAINMENU, and MENU.

Another key word allows you to move backward one screen at a time. This word is PREVIOUS. The key word which moves you directly to the data dictionary is DD. Finally, if you want to invoke the help facility from any template, type in HELP.

3.3.3 PF Keys

The PF keys are another method of navigation. These keys are located at the bottom of the screen, as pictured in the following example. PF keys enable you to move from one location to another and are executed by pressing the key which represents the type of movement you desire.

```
--------------------------------------------------------------------------------
 PF1= HELP                 PF5= MAIN MENU                   PF12= END
```

PF Keys

PF keys are as follows.

PF1 = HELP

PF5 = MAIN MENU

PF3 = PREVIOUS SCREEN

PF12 = END

When you enter the help facility for NPPS, some of the PF keys take on a new meaning. The PF keys which are available within the help facility are listed below.

PF1 = TOP

PF2 = DISPLAY/UPDATE MODE

PF3 = END

PF4 = DD (DATA DICTIONARY)

PF7 = BKWD (BACKWARD)

PF8 = FWD (FORWARD)

PF9 = COPY

Before you press a PF key, be sure to check its function at the bottom of the NPPS screen.

3.3.4 Chained Set of Screens ENTER Key

Some actions are performed by filling in a set of related templates. These templates are linked to form a chain. You move from one template to the next by simply pressing **ENTER**. You must move through the templates in a predetermined sequence which facilitates the logical processing of the action. The templates within a chain do not have a command line and you may not move directly to these templates.

3.3.5 Personnel Actions Hot Key

While processing a personnel action via a chain of templates, you may move directly to the final template of the chain by pressing the hot key, which is identified in the list of PF keys found at the bottom of the screen.

3.4 Help Support

Each menu and template has an accompanying help screen or set of help screens. The following example is the help screen that accompanies the Application Administration Menu. These screens comprise the help facility.

```
NSS0004                          NPPS
  MODE: DISPLAY              HELP FACILITY

  TEMPLATE ID: ADMMENU         PAGE NUMBER:  1      FUNCTION: R


  THIS MENU ALLOWS YOU TO SELECT FROM:
           SECURITY MAINTENANCE
           MAINTENANCE UTILITIES
               (sub functions)
               COMMAND TABLE MAINTENANCE
               BATCH JOB MAINTENANCE
               PERSONNEL RELATIONAL EDITS
           PROCESS CONTROLS
               (sub functions)
               PAYROLL
               PERSONNEL
           BATCH JOB SCHEDULING

 ------------------------------------------------------------------------------
    FUNCTIONS:   A= ADD   C= CHANGE   D= DELETE   I= INSERT   R= RETRIEVE
  PF1= TOP PF2= DISP/UPDT MODE  PF3= END  PF4= DD PF7= BKWD  PF8= FWD  PF9= COPY
```

Help Screen

The help facility contains basic system conventions and menu navigation assistance. However, the help facility is provided primarily as a tool to be customized by each installation. This enables the installation to provide any information needed to assist the user in performing tasks associated with personnel and payroll processing. An example of information which might be added to the help facility is the set of center-unique codes and their values. Other examples are special personnel processing information and site-unique procedures for balancing payroll.

One template or menu may have more than one help screen (i.e., a set of help screens). All help screens in the set share the same template ID, but have unique page numbers. The following example is the set of three help screens that accompany the Master Employee Record Menu.

```
NSS0004                          NPPS
MODE: DISPLAY              HELP FACILITY
TEMPLATE ID: MMER            PAGE NUMBER:  1      FUNCTION: R
  ---------------------------------------------------------------------------

  USE:                                TO:
  1 - Master Selection MER Menu       Access any of the MER Modules pertaining
                                      to deductions, pay adjustments, leave
                                      adjustments, YTD, query, miscellaneous,
                                      suspend, and mass.

  2-  Employee Location Menu          Display/update information pertaining to
                                      distribution of pay-related data.

  3 - Current PP Pay Actions Menu     Process current pay period actions.

                                                                 Screen 1 of 3


 ---------------------------------------------------------------------------
    FUNCTIONS:   A= ADD   C= CHANGE   D= DELETE   I= INSERT   R= RETRIEVE
  PF1= TOP PF2= DISP/UPDT MODE  PF3= END  PF4= DD PF7= BKWD  PF8= FWD  PF9= COPY
```

Master Employee Record Menu (Page 1)

```
NSS0004                          NPPS
MODE: DISPLAY              HELP FACILITY
TEMPLATE ID: MMER            PAGE NUMBER:  2      FUNCTION: R
  ---------------------------------------------------------------------------
  USE:                                         TO:
  4 - Leave Hours Adjustments Menu              Update an employee's record to
                                                reflect leave hours.

  5 - Dollar Accumulations Adjustments Menu     Change an employee's dollar
                                                accumulation amounts.

  6 - MER Controls and Queries Menu             Display an employee's payroll
                                                information.
                                                                 Screen 2 of 3
 ---------------------------------------------------------------------------
    FUNCTIONS:   A= ADD   C= CHANGE   D= DELETE   I= INSERT   R= RETRIEVE
  PF1= TOP PF2= DISP/UPDT MODE  PF3= END  PF4= DD PF7= BKWD  PF8= FWD  PF9= COPY
```

Master Employee Record Menu (Page 2) (Continued)

```
NSS0004                          NPPS
MODE: DISPLAY               HELP FACILITY
TEMPLATE ID: MMER            PAGE NUMBER:  3      FUNCTION: R
  ------------------------------------------------------------------------------
  USE:                                          TO:
  7 - Payroll Suspense Maintenance Query         Display suspended payroll
                                                 information for an individual
                                                 employee or group of employees.

  8 - Mass and Global Transactions Menu          Access the option to perform mass
                                                 changes on payroll information.

  9 - Start New Employee Add Chain               View a list of new employees
                                                 and initiate the add chain.
                                                                   Screen 3 of 3
 ------------------------------------------------------------------------------
    FUNCTIONS:   A= ADD   C= CHANGE   D= DELETE   I= INSERT   R= RETRIEVE
  PF1= TOP PF2= DISP/UPDT MODE  PF3= END  PF4= DD PF7= BKWD  PF8= FWD  PF9= COPY
```

Master Employee Record Menu (Page 3) (Concluded)

3.4.1 Benefits of Using Help

Help screens which accompany menus display an explanation of the choices available at the given menu. Help screens which accompany templates provide an explanation of the function field and refer you to the data dictionary for information regarding other fields which appear on the template.

The error and informational messages are not explained on the help screens. This is because these messages are self-explanatory. However, if you want more information about the error and informational message, refer to Appendix B.

3.4.2 Instructions for Using Help

If you have a question about a particular menu or template, press **PF1** in order to access help. When you request help, NPPS shows you the first help screen for the template you are viewing. The additional help screens for the template are available one page at a time. Press **PF8** to page forward through the set of screens and **PF7** to page backward. If you want to move directly to a specific page number, type the desired page number in the appropriate field at the top, center of the screen and press **ENTER**. When you are finished with the help screens, press **PF3** and you will return to the original template that you were viewing when you requested assistance.

Authorized individuals may add new help screens, change the contents of existing help screens, and delete unwanted help screens. For more information on updating the help screens, refer to Section 4.3.1.4.

3.4.3 Data Dictionary

The data dictionary is available both online and in print. Since the online version of the data dictionary is easily accessible when you are working in NPPS, you will probably not require the printed version on a regular basis.

The data dictionary contains every data name, its corresponding field names, and any corresponding acronyms. The online data dictionary enables you to locate all three versions of the data name with equal efficiency by typing in the version you would like at the time you request information. For each data name, the dictionary provides a description of the name, its source, the file(s) in which the name may be located, and its edit criteria. The dictionary also provides the type and size of the data name.

You may access the data dictionary by typing **DD** in the command line and pressing **ENTER**. This method may be executed from any template or menu with a command line.

If the data dictionary cannot locate the field by the name you have provided, you can initiate a search for the field by pressing **PF1** and choosing the type of name you seek and the starting value. When you finish reviewing the description of the field, press **PF3** to exit the data dictionary and return to the menu or template you were viewing when you first requested help.

3.4.4 Instructions for Using the Data Dictionary

The steps to look up a data name in the printed version of the data dictionary are identical to looking up a word in a regular dictionary. You manually search for the data name according to its location in the alphabet.

Though the procedures for looking up a data name in the online version of the data dictionary are not as familiar to most individuals, they are just as simple once you learn them. First, you must access the data dictionary. This may be done from any NPPS screen with a command line. Then you type in the data name or begin a search for the name based on the first few letters. When you finish reviewing the information, you press **PF3** in order to return to your original location in NPPS. The procedures for looking up a name in the online data dictionary are as follows.

<u>To Access the Online Data Dictionary from NPPS</u>

1. Press HOME to move your cursor to the command line.

2. At the command line, type **DD** and press **ENTER**;
   or
   From any help screen, press **PF4**.

To Look Up a Known Data Name

The first screen of the online data dictionary is entitled, "NASA Personnel/Payroll System Glossary Inquiry."

```
UDDM1000              NASA PERSONNEL / PAYROLL SYSTEM
                               GLOSSARY INQUIRY
Data Name: ____________________________________



    Enter Data Name and press 'RETURN' to start inquiry
Enter-PF1---PF2---PF3---PF4---PF5---PF6---PF7---PF8---PF9---PF10--PF11--PF12---
     HELP        PREV                                                  QUIT
```

Data Dictionary

At the Data Name blank, type in the name and press **ENTER**.

```
UDDM1000              NASA PERSONNEL / PAYROLL SYSTEM
                               GLOSSARY INQUIRY
Data Name: NAME: LAST__________________________


    Enter Data Name and press 'RETURN' to start inquiry
Enter-PF1---PF2---PF3---PF4---PF5---PF6---PF7---PF8---PF9---PF10--PF11--PF12---
     HELP        PREV                                                  QUIT
```

Look Up Known Data Name

You will then receive the first screen of information about this name. You may view the second and third screens of information by pressing **ENTER** (refer to the following screens) or return to the initial Glossary Inquiry screen by pressing **PF3**.

```
UDDM2100              NASA PERSONNEL / PAYROLL SYSTEM
                               GLOSSARY INQUIRY
Data Name: NAME: LAST
  Source: SF 52                            Type: A    Size: 22.0

Description:
      Last name by which an employee is designated on
      official transactions


                   Press 'RETURN' to continue inquiry ...
Enter-PF1---PF2---PF3---PF4---PF5---PF6---PF7---PF8---PF9---PF10--PF11--PF12---
                 PREV                                                   QUIT
```

Last Name Field (Page 1)

```
UDDM2300              NASA PERSONNEL / PAYROLL SYSTEM
                               GLOSSARY INQUIRY
Data Name: NAME: LAST

      ADABAS FILE NAME    ADABAS FIELD NAME
      ================    ================================
    1 NPS2-PER-MASTER     PER-NAME-LAST
    2 NPS2-PER-PMRS       PMRS-NAME-LAST
    3 NPS2-PAY-MASTER     PAY-NAME-LAST
    4
    5
    6
    7
    8
    9
   10

Enter-PF1---PF2---PF3---PF4---PF5---PF6---PF7---PF8---PF9---PF10--PF11--PF12---
                 PREV                    BCKWD FORWD                    QUIT
```

Last Name Field (Page 2)

To Look Up an Unknown Data Name

1. At the Data Name blank, type in an approximation of the correct data name and press **ENTER**.
   If you do not type in the exact data name, the dictionary will display a message at the bottom of the screen which explains that the data name you entered was not found. You will be prompted to press **PF1** for help.

```
UDDM1000              NASA PERSONNEL / PAYROLL SYSTEM
                               GLOSSARY INQUIRY
Data Name: LAST NAME_______________________


 Data Name as entered NOT found.   Use F1 for HELP....
Enter-PF1---PF2---PF3---PF4---PF5---PF6---PF7---PF8---PF9---PF10--PF11--PF12---
     HELP        PREV                                                   QUIT
```

Look Up Unknown Data Name

2. Press **PF1** and view the following pop-up menu which is used to initiate a search for an unknown data name.

```
UDDM1000              NASA PERSONNEL / PAYROLL SYSTEM
                               GLOSSARY INQUIRY

Data Name: LAST NAME_______________________


           +--------------------------------------------------+
           |                                                  |
           |   Search by    : 1  1) Data Name                 |
           |                     2) Field Name                |
           |                     3) Cancel Search             |
           |                                                  |
           |   Starting from: LAST NAME____________________  |
           |                                                  |
           +--------------------------------------------------+



 Data Name as entered NOT found.   Use F1 for HELP....
Enter-PF1---PF2---PF3---PF4---PF5---PF6---PF7---PF8---PF9---PF10--PF11--PF12---
     HELP        PREV                                                   QUIT
```

Initiate Data Name Search

3. Select the type of name for which you want to search.
   1 = Data Name
   2 = Field Name
   3 = Cancel Search
   This inquiry presents two options for glossary search: data name and field name. The option you select depends on whether your search is for a data name that is used as the descriptive full text name in the glossary, or the field name that is defined to the data management software and is used programmatically to access the data in the programming and query language (super natural and natural).

4. Select the Data Name option and type in the letter(s) you select as a starting point for your search for a data name and press **ENTER**.

5. At the listing, view the data names until you find the name you are seeking (refer to the following screen). If you do not locate the name on the first display screen, press **ENTER** to move to the next screen.

```
UDDM1100              NASA PERSONNEL / PAYROLL SYSTEM
                               GLOSSARY INQUIRY
Search by    : Data Name
Starting from: LAST NAME_________________________
Mark 'X' for Detail     Data Name
             ======     ================================
                _       LEAVE PERIOD: CURRENT
                _       LEAVE PERIOD: TOTAL
                _       LEGAL AUTHORITY CODE: 1
                _       LEGAL AUTHORITY CODE: 2
                _       LUMP SUM: FED W/H 20% RATE IND
                _       LUMP SUM: LEAVE ADJ
                _       LUMP SUM: LEAVE HOURS
                _       LUMP SUM: LEAVE HRLY RATE
                _       LUMP SUM: LEAVE PAYMENT
                _       LUMP SUM: LEAVE PAYMENT YTD
                _       LUMP SUM: RESTORED HOURS
                _       LWOP: NTE DATE
                 Press 'RETURN' to continue scrolling ...
Enter-PF1---PF2---PF3---PF4---PF5---PF6---PF7---PF8---PF9---PF10--PF11--PF12---
                 PREV                                                   QUIT
```

View Data Name Listing

6. When you locate the data name, enter **X** in the blank to the left of the name and press **ENTER** (refer to the following screen). You will then receive the first screen of information about this data name. You may view the second screen of information by pressing **ENTER** or return to the initial Glossary Inquiry screen by pressing **PF3**.

```
UDDM1100              NASA PERSONNEL / PAYROLL SYSTEM
                                GLOSSARY INQUIRY
Search by    : Data Name
Starting from: LAST NAME_______________________
Mark 'X' for Detail     Data Name
             ======     ================================
                _       MILITARY LEAVE: DAYS LIMIT
                _       MILITARY LEAVE: USED B/W HOURS
                _       MILITARY LEAVE: USED DAYS FYTD
                _       MILITARY LEAVE: USED WEEK 1
                _       MILITARY LEAVE: USED WEEK 2
                _       MILITARY LEAVE: USED YTD HOURS
                _       MINORITY CODE
                _       MISCELLANEOUS REQUIRED AMT
                _       MISCELLANEOUS YTD
                _       NAME: FIRST
                _       NAME: GENEALOGICAL SUFFIX
                X       NAME: LAST
                 Press 'RETURN' to continue scrolling ...
Enter-PF1---PF2---PF3---PF4---PF5---PF6---PF7---PF8---PF9---PF10--PF11--PF12---
                 PREV                                                   QUIT
```

Select Desired Data Name

To Look Up an Unknown Field Name

1. Press **PF1** and view the pop-up menu which is used to initiate a search for an unknown name.

2. Select the Field Name option and type in the letter(s) you select as a starting point for a field name and press **ENTER**.

3. At the listing, view the field and data names until you find the name you are seeking (refer to the following screen). If you do not locate the name on the first display screen, press **ENTER** to move to the next screen.

```
UDDM1300              NASA PERSONNEL / PAYROLL SYSTEM
                                GLOSSARY INQUIRY
Search by    : Field Name
Starting from: ________________________________
Mark 'X'
Detail Field Name                          Data Name
=====  ==============================      ================================
  _    A-L-PT-CARRY-OVR                    ANNUAL LV: P/T CARRY OVER HIST
  _    ADDR-AWARD-DATA                     AWARD: PE GROUP DATA
  _    ADDR-AWD-CITY-DED                   AWARD: CITY TAX DED
  _    ADDR-AWD-CNTY-DED                   AWARD: COUNTY TAX DED
  _    ADDR-AWD-EARN                       AWARD: EARNINGS
  _    ADDR-AWD-EFDATE                     AWARD: EFF DATE
  _    ADDR-AWD-FEDTX-DED                  AWARD: FED TAX DED
  _    ADDR-AWD-FICA-DED                   AWARD: FICA DEDUCTION
  _    ADDR-AWD-FICA-EARN                  AWARD: FICA EARNING AMOUNT
  _    ADDR-AWD-FICA-GOV-DED               AWARD: FICA GOV DED
  _    ADDR-AWD-HIT-DED                    AWARD: HIT DEDUCTION
  _    ADDR-AWD-HIT-EARN                   AWARD: HIT EARNING AMOUNT

                  PRESS 'RETURN' TO CONTINUE SCROLLING ...
Enter-PF1---PF2---PF3---PF4---PF5---PF6---PF7---PF8---PF9---PF10--PF11--PF12---
                  PREV                                                   QUIT
```

View Field Name Listing

4. When you locate the field name, enter **X** in the blank to the left of the name and press **ENTER**. (Refer to the following screen.) You will then receive the first screen of information about this field name. You may view the second screen of information by pressing **ENTER**, or you may return to the initial Glossary Inquiry screen by pressing **PF3**.

```
UDDM1300              NASA PERSONNEL / PAYROLL SYSTEM
                                GLOSSARY INQUIRY
Search by    : Field Name
Starting from: ________________________________
Mark 'X'
Detail Field Name                          Data Name
=====  ================================    ================================
  _    A-L-PT-CARRY-OVR                    ANNUAL LV: P/T CARRY OVER HIST
  _    ADDR-AWARD-DATA                     AWARD: PE GROUP DATA
  _    ADDR-AWD-CITY-DED                   AWARD: CITY TAX DED
  _    ADDR-AWD-CNTY-DED                   AWARD: COUNTY TAX DED
  x    ADDR-AWD-EARN                       AWARD: EARNINGS
  _    ADDR-AWD-EFDATE                     AWARD: EFF DATE
  _    ADDR-AWD-FEDTX-DED                  AWARD: FED TAX DED
  _    ADDR-AWD-FICA-DED                   AWARD: FICA DEDUCTION
  _    ADDR-AWD-FICA-EARN                  AWARD: FICA EARNING AMOUNT
  _    ADDR-AWD-FICA-GOV-DED               AWARD: FICA GOV DED
  _    ADDR-AWD-HIT-DED                    AWARD: HIT DEDUCTION
  _    ADDR-AWD-HIT-EARN                   AWARD: HIT EARNING AMOUNT

                  PRESS 'RETURN' TO CONTINUE SCROLLING ...
Enter-PF1---PF2---PF3---PF4---PF5---PF6---PF7---PF8---PF9---PF10--PF11--PF12---
                  PREV                                                   QUIT
```

Select Desired Field Name

<u>To Exit the Online Data Dictionary and Return to NPPS</u>

Press **PF3**.

4 ONLINE/INTERACTIVE CAPABILITIES

NPPS provides three major online processing capabilities: personnel, payroll, and application administration. These capabilities are described in greater detail in this section.

The three major capabilities are further divided into their various operations. For each operation, the following information is provided. Sections marked with an asterisk (*) are included for an individual operation only when required.

- Display of the Screen(s)
- Description and Execution
- User Input *
- System Provided Data *
- Description of Data Processing Results and Outputs
- Interrelationships *
- Options *

User inputs are explained in the NPPS Data Dictionary. A data dictionary is also available for viewing online. By typing **DD** in the command line, you may exit NPPS and move to the data dictionary from any menu or template. When you have completed your research, press **PF3** until you return to your original menu or template.

All error messages are listed in Appendix B and will be displayed on the screen when appropriate.

Limitations and options are discussed throughout the guide when they are relevant.

4.1 Personnel

```
COMMAND: ________                    NPPS
NEO0000                  PERSONNEL MAIN MENU - PERMM
-------------------------------------------------------------------------------

                   CENTER ID:         NPPS VERSION:

                   ENTER ONE OF THE FOLLOWING SELECTIONS: __

                     1 - PERSONNEL ACTIONS
                     2 - PLANNING ACTION
                     3 - MATURE PROCESS
                     4 - SF-50/SF-52 PROCESSING
                     5 - TABLES MAINTENANCE
                     6 - ACI
                     7 - MASS ACTIONS
                     8 - EMPLOYEE SERVICE RECORD
                     9 - PERSONNEL HISTORY FILE MAINTENANCE
                    10 - PERSONNEL AUDIT BROWSE

-------------------------------------------------------------------------------
 PF1= HELP                      PF5= MAIN MENU                      PF12= END
```

Personnel Main Menu (PERMM)

DESCRIPTION AND EXECUTION

NPPS maintains NASA personnel data in a form that can readily be retrieved and updated. This capability is accomplished through the Personnel Main Menu (PERMM), which is composed of 10 major operations. Following are the operations as listed on the Personnel Main Menu and a brief description of each.

1. Personnel Actions: Provides the capability for processing all personnel actions for new or existing employees.
2. Planning Action: Creates Within Grade (WIG) Increases, Changes in Tenure, or Changes in TSP Eligibility and places them on the suspense file.
3. Mature Process: Matures (applies) personnel actions from the suspense file to the database.
4. SF 50/SF 52 Processing: Prints SF 50s and SF 52s.
5. Tables Maintenance: Allows maintenance of the personnel tables.
6. ACI: Prepares ACIs on the suspense file.
7. Mass Actions: Allows for a select set of mass/global NOACs to be created.
8. Employee Service Record: Displays an employee's service record.
9. Personnel History File Maintenance: Changes and/or deletes personnel action history records.
10. Personnel Audit Browse: Browses the contents of the personnel history audit records.

Step to Reach the Personnel Main Menu

1. At the Main Menu, select **1** - Personnel.

4.1.1 Personnel Actions Main Menu

```
COMMAND: ________                    NPPS
NEO1000             PERSONNEL ACTIONS MAIN MENU - PERMAIN
-------------------------------------------------------------------------------


                   ENTER ONE OF THE FOLLOWING SELECTIONS: _


                     1 - SF 50 PERSONNEL ACTION PROCESSING

                     2 - VIEW MASTER RECORD

                     3 - QUERY SUSPENSE FILE

                     4 - MASS DELETION OF SUSPENDED ACTIONS

                     5 - SF 52 PERSONNEL ACTION PROCESSING


-------------------------------------------------------------------------------
 PF1= HELP                    PF5= MAIN MENU                    PF12= END
```

Personnel Actions Main Menu (PERMAIN)

DESCRIPTION AND EXECUTION

The Personnel Actions Main Menu (PERMAIN) is used to select one of the five functions available in this section. Each function is described briefly below (as illustrated in Figure 4.1.1-1).

1. SF 50 Personnel Action Processing: Processes a personnel action for a new or existing employee.
2. View Master Record: Displays employee data from the master record.
3. Query Suspense File: Queries the suspense file for existing actions.
4. Mass Deletion of Suspended Actions: Deletes user-specified personnel action(s) on the suspense file.
5. SF 52 Personnel Action Processing: Processes a request for personnel action for a new or existing employee.

<u>Steps to Reach the Personnel Actions Main Menu</u>

1. At the Main Menu, select **1** - Personnel.
2. At the Personnel Main Menu, select **1** - Personnel Actions.

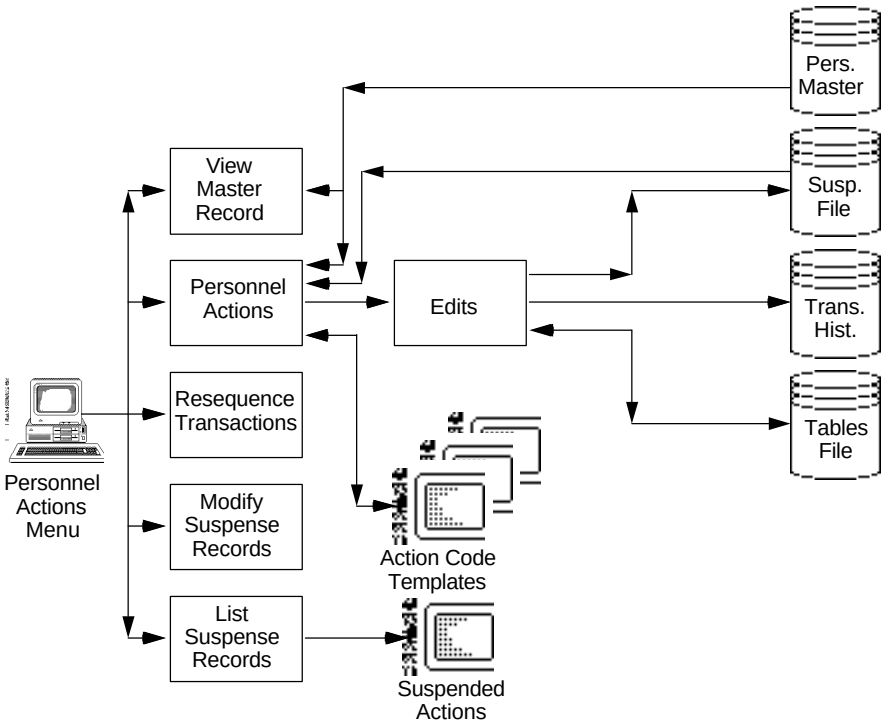

Figure 4.1.1-1 Personnel Actions

4.1.1.1 SF 50 Personnel Action Processing

```
COMMAND: ________                    NPPS
NEO1001         SF 50 PERSONNEL ACTION PROCESSING MENU - PERACT
-------------------------------------------------------------------------------

SSN: ___ __ ____  NOAC: _____  EFDATE: __ __ ____  FUNC: _
NAME(LAST,FIRST): _______________________  ____________

     FUNCTION                DESCRIPTION

        A            ADD THE ACTION TO SUSPENSE
        C            CHANGE AN EXISTING SUSPENSE ACTION
        D            DELETE AN EXISTING SUSPENSE ACTION
        E            CHANGE THE EFDATE OF AN EXISTING SUSPENSE ACTION
        H            CHANGE SSN ON ACCESSION ACTION
        R            RETRIEVE AN EXISTING SUSPENSE ACTION
        S            RE-SEQUENCE SUSPENSE ACTIONS
        T            CONVERT SF52 ACTION TO SF50 ACTION

-------------------------------------------------------------------------------
 PF1= HELP                      PF5= MAIN MENU                      PF12= END_
```

SF 50 Personnel Action Processing Menu (PERACT)

DESCRIPTION AND EXECUTION

The SF 50 Personnel Action Processing Menu (PERACT) is used to add an action to the suspense file, change or delete an action on the suspense file, view an existing suspense action, change the effective date of an existing action, change the SSN on accession and subsequent actions, re-sequence suspense actions, or convert an SF 52 action to an SF 50 action. First, you must enter the necessary information about the employee (i.e., SSN, NOAC, Effective Date, or Name). Then select a function by entering its letter in the blank marked FUNC. All the available functions are listed on the screen.

When you press **ENTER**, you will receive the series of templates which correspond to the function you requested.

Personnel data is processed through a series of personnel actions identified by a NOAC. NPPS processes all employee personnel actions described in the FPM and those identified by NASA as having a NOAC in the 900 series. Each NOAC lists only those fields that you are allowed or required to enter. Required fields are those for which data must be entered. Optional fields are those for which data may be entered. The user has the capability to define optional fields as locally required fields at the NOAC level using table TREQFLD (refer to Description in PERTAB section).

As you complete each screen of mandatory and optional entries for a given personnel action, NPPS tests your entries on a single edit check basis (e.g., verifies the FEHB code you entered actually occurs in the FEHB table).

NPPS displays informative error messages when edit errors occur. OPM edit errors appear in the form of the OPM edit code, and you may request to view the

corresponding description of any error code. After you have completed all the mandatory and optional entries for the entire action (i.e., all related screens), NPPS performs a relational edit check. If all the entries for the action being processed pass the relational edit check, the action is placed on the suspense file. If one or more of the entries do not pass the edit check, NPPS displays the OPM error codes in the top, left corner of the screen. You must then correct the entry in error and resubmit the action for processing.

Authorized individuals may place an action which does not pass edit checks on suspense by electing to bypass the edits. When you elect to bypass edits by placing X in the bypass edit field, all relational and single field value edits are ignored. NPPS allows you to process actions for non-NASA employees without having to enter data in those fields that are required for NASA employees by placing **S** or **N** in the bypass edit field. The "S" represents the subset of OPM to be performed (System/Software Requirements Specification (SRS) Table 3-8) and the "N" represents no OPM edits. On all actions other than accession NOACs, the "S" will be the default for non-NASA employees.

NPPS ensures that the employee's most current master record is used for relational edit purposes for the action being processed. When an action is entered, all SF 50 actions in suspense with a different NOAC for that SSN which have not matured and have an Effective Date prior to, or equal to, the Effective Date of the action being entered will be temporarily applied (a mock update) to the employee record.

Multiple actions may be suspended for the same employee whether or not those actions have the same Effective Date. NPPS allows you to specify the sequence in which actions will be applied to the employee's master record for those actions with the same Effective Date. However, when a new action is suspended with an effective date earlier than the effective date of pre-existing SF 50 suspended actions, the pre-existing actions will be set to error status to ensure that they will be checked for impact from the new action.

NPPS allows you to modify or edit any unmatured suspended transaction. NPPS also allows you to delete any suspended transaction.

During the processing of an action, some of the fields are automatically filled in by NPPS. The information NPPS will enter in these fields may not be present at the time the screen is processed; this data is referred to as "System Provided Data." NPPS loads some fields using information you have already entered in a previous field. NPPS loads other fields using information from the personnel tables (i.e., NPPS performs table look-ups; e.g., Salary). You may override any entry which NPPS provides by typing in your own information.

If you want to zero fill a required data element, you may use "9" for a numeric field or a period (.) for an alpha field. You may also use the "9" to take out a numeric value or a period (.) to remove an alpha value which already exists in the master record.

An exception to this rule exists for Empl AUO Pct, Retention Allowance Percent, Staffing Differential Percent, and Supervisory Differential Percent. These fields cannot be reset to zero directly, but by entering a **9** in the corresponding amount, the percent fields will be set to zero when the action is matured.

Once an action has been input on suspense and the appropriate fields have been filled in via a table look-up, the following procedure must be executed in order for the system to look up new values based on any changes made to the action.

First, change the action by entering the new data in the fields you wish to update. Then, erase the old values from the related table look-up fields. NPPS will look-up new values for these fields only if they are manually blanked out prior to the processing of each individual screen.

You have two other options that will enable you to update the table look-up fields. You may enter the updates to all related fields manually or delete the action from the suspense file and enter it with the updated data, thereby ensuring accurate table look-up values.

NPPS allows the modification of the effective date after it has been originally placed on the suspense file by choosing function **E** on the PERACT menu. NPPS also allows the re-sequencing of transactions that are effective on the same day for the same employee by choosing function S on the PERACT menu. However, changing the effective date or re-sequencing transactions does not automatically recalculate those fields that may be based on effective date or other data values. After the effective date has been modified or transactions have been re-sequenced, the user should do a change on the actions following the procedures described in the previous paragraph to properly ensure that all data is correct and a good SF 50 has been produced.

NPPS allows for the conversion of an SF 52 action to an SF 50 action by choosing function **T** on the PERACT menu. Only those actions for which an SF 52 has been printed will be allowed to be converted. During the conversion process, NPPS will reset to blank the following fields: Bypass Edit, Suspense Sequence, Combination, and Print Status. The edit function (FUNC on PERACT menu) will be reset to "C" and you will be positioned at the first input screen.

NPPS allows the modification of the SSN on accession and subsequent actions after they have been originally placed on the suspense file by choosing function **H** on the PERACT menu and specifying the accession action. This option is available only on transactions against a new hire (unmatured action with NOAC equal 100-199 or fourth character equals "A").

```
NEMXXXXA                  (SCREEN)A     SF52 DATA         0 OF 0
BY-PASS EDIT: _
 1.NAME(LAST,SUF,FIR,MI) 2.SSN            3.BIRTH DATE 0  0  0    > 0  0  0
                                                     4.EFDATE 0  0  0
 5A.NOAC         NOAC NTE  0  0  0       6A. NOAC        NOAC NTE  0  0  0
 5B. _________________________           6B.
     ___________________________________
 6C. AUTH1 ___                           6E. AUTH2 ___
 6D. _________________________           6F. _________________________
     ___________________________________     ___________________________________
 7.OPM TTL                                        /                    TITLE
       15.>                                       /                    CODE
 7.NASA TTL                                       /                       >
       15.>                                       /
  PDN          NCC         SUPIND       >   PDN          NCC         SUPIND
 8.PAY PLAN          9.OCC CODE        > 16.PAY PLAN         17.OCC CODE
10.GRADE  0         11.STEP            > 18.GRADE            19.STEP
12.TOTSAL 0.00      13.PAY BASIS       > 20.TOTSAL 0.00      21.PAY BASIS
-------------------------------------------------------------------------------
 PF1= HELP        PF2= TBL LOOKUP   PF3= PREV SCREEN   PF4= OPM MSG
 PF5= MAIN MENU   PF6= END ACTION   PF10= MASTER INQ   PF11= GO TO    PF12= END
```

Screen A

SYSTEM PROVIDED DATA

NPPS sets the Legal Authority descriptions based on the Legal Authorities entered by the user in accordance with personnel table TAUTH.

NPPS sets OPM Title, NASA Title, and Local Title based on the Title Code, Occupational Code, NASA Class Code, and Supervisory Indicator. When one of these four codes is updated, NPPS will look up and update the accompanying titles.

NPPS sets the Empl Tot Pay Amt equal to the sum of Empl Adjstd Basic Pay Amt and Empl Othr Pay Amt.

```
NEMXXXXB
                        (SCREEN) B -    (SF52 DATA)          0 OF 0
  BY-PASS EDIT: _
  NAME                                                          SSN
  12A.BASIC PAY                          >  20A.BASIC PAY      0.00_____
  12B.LOCALITY ADJ                       >  20B.LOCALITY ADJ   0____
  12C.ADJ BASIC PAY                      >  20C.ADJ BASIC PAY  0.00
  12D.OTHER PAY                          >  20D.OTHER PAY      0
  14.ORG ASSIGNED        >  22.ORG ASSIGNED  _____
     ORG LOCATED         >     ORG LOCATED   _____
  23.VET PREF      > _  24.TENURE    > _   26.VETPREF RIF        > _
  27.FEGLI         > __ 28.ANUIND    > _   29.PAYRAT DET         > _
  30.RET PLAN      > _                     31.SCD LV             > 0_ 0_ 0___
  32.WORKSCH       > _                     33.PT HOURS SCH       > __
  34.POS OCC       > _  35.FLSA      > _   36.APPROP CODE
  37.UNION BU      > ____                                  > ___________________
  38.DUTY STATION            > _________
  45.ED LEVEL    > __  46.YR DEG       > ____  47.ACAD DISC          > ______
  48.FUNC CL     > __  49.CITIZEN      > _     50.VET STATUS         > _
 ---------------------------------------------------------------------------
  PF1= HELP             PF3= PREV SCREEN                        PF5= MAIN MENU
  PF6= END ACTION       PF10= MASTER INQ       PF11= GO TO      PF12= END
```

Screen B

USER INPUT

NPPS stores the Duty Station Name based on the Duty Station Code which you enter.

SYSTEM PROVIDED DATA

NPPS sets the Appropriation Code based on the value of the Project Line Item input by the user for non-NASA employees. This value is found in the TPRJLINE table.

NPPS sets Degree: Highest Level, Degree: Highest Year, and Degree: Highest Field to zero(s) if Educational Level changes to a value less than 10.

NPPS sets the Empl Basic Pay Amt in accordance with table TSALSTEP based on any change to Pay Table, Grade: Current, or Step and if the following criteria has been met:

1. Action being processed must be an accession, conversion, 702, 703, 713, 721, 740, 741, 866, 892, 893, 894, 002, or 001.
2. Employee's Pay Plan must not equal GM.
3. Employee's Step must not equal 0.
4. Employee's Pay Rate Determinant must equal 0, 5, 6, 7, A, B, C, E, F, or M.

NPPS sets the Empl Lclty Adjstmnt Anl Amt based on any change to Empl Basic Pay Amt or Empl Sch Basic Pay Amt when the Locality Adjustment Indicator is found in table TLOA.

NPPS sets Empl Adjstd Basic Pay Amt equal to the sum of Empl Basic Pay Amt or Empl Sch Basic Pay Amt when greater than zero and Empl Lclty Adjstmnt Anl Amt.

NPPS sets Empl Other Pay Amt equal to the sum of Retention Allowance, Supervisory Differential, Salary: Staffing Differential, and Empl AUO Anl Amt.

```
NEMXXXXC                        (REMARKS)                    0 OF 0
BY-PASS EDIT: _

NAME                                                          SSN
PART D - REMARKS BY REQUESTING OFFICE
 ___   ____________________________________________________________________
 ___   ____________________________________________________________________
 ___   ____________________________________________________________________
 ___   ____________________________________________________________________
 ___   ____________________________________________________________________
 ___   ____________________________________________________________________
 ___   ____________________________________________________________________
 ___   ____________________________________________________________________
 ___   ____________________________________________________________________
 ___   ____________________________________________________________________
 ___   ____________________________________________________________________
   AGENCY CODE       > ____   APP DATE  0_ 0_ 0_     SIGNATURE  _
   REQUIRED 50  _             PRINT STATUS  _        COMBINED   _
-----------------------------------------------------------------------------
 PF1= HELP        PF3= PREV SCREEN        PF5= MAIN MENU        PF6= END ACTION
 PF8= FWD         PF9= REM    PF10= MASTER INQ      PF11= GO TO        PF12= END_
```

SF 50 Remarks

USER INPUT

You may enter SF 50 Comment Codes to be associated with a personnel action, as well as insert input variables into the remark associated with the SF 50 Comment Code you enter, and override the remark associated with any SF 50 Comment Code as you desire.

NPPS sets a SF 50 Comment Code equal to P26 with the variable contained in this remark set equal to payable salary if the employee is General Merit (Pay Plan equals GM) who is limited by the salary cap (Empl Sch Basic Pay Amt greater than zero) and is not a re-employed annuitant (Annuitant Indicator equals 1, 4, or 5).

NPPS sets a SF 50 Comment Code equal to P11 with the variable contained in this remark set equal to Empl Sch Basic Pay Amt when an employee is limited by the salary cap (Empl Sch Basic Pay Amt greater than zero) and is not General Merit (Pay Plan equals GM) or a Re-employed Annuitant (Annuitant Indicator equals 1, 4, or 5).

```
* PLEASE ADD/CHANGE DESIRED DATA


NEMXXXXE              (SCREEN)E   (FREQ. MISC. DATA)   0 OF 0
BY-PASS EDIT:  _
NAME                                                          SSN
ADMIN LEVEL          > _____      SEX             > _  COMPLEV           > _ ___
EMPNO                > ______     POS TYPE        > _  POS TYPE LOCAL    > _ _
SCH BASIC  0.00      > 0.00_____  DUTY STATUS     > _  PRIOR RET COVER   >  _
SCH LCLTY  0         > 0____      DEPART DEST     > _  AGENCY/ FROM      > _ ___
SCH ADJ    0.00      > 0.00       DEPART REASON   > _   INSTALL TO       > __ __
SCH TOT    0.00      > 0.00       HANDICAP        > __ EMP INDICATOR     > _
PAYTBL               > ___                             PROJ PROMOTION    > _ _
FEHB/FULL PAY        > ___ _      HI PAYPLAN      > __ FINSTM            > _
MINORITY             > _          FACILITY        > _  LV ENTITLEMENT    > _
HI GRADE          0  > __                 WIG WAIT    0  0  0    > 0_ 0_ 0__ _
FINSTM DATE    0  0  0    > 0_ 0_ 0___    NEXT WIG    0  0  0    > 0_ 0_ 0___
LAST EQV INC   0  0  0    > 0_ 0_ 0___    LAST PROMO  0  0  0    > 0_ 0_ 0___
CURRENT GRADE  0  0  0    > 0_ 0_ 0___    CRED MIL    0  0  0    > 0_ 0_ 0_
EOD            0  0  0    > 0_ 0_ 0___    NASA SCD    0  0  0    > 0_ 0_ 0___
FROZEN CSRS    0  0  0    > 0_ 0_ 0_      RIF SCD     0  0  0    > 0_ 0_ 0___
-------------------------------------------------------------------------------
PF1= HELP             PF3= PREV SCREEN                          PF5= MAIN MENU
PF6= END ACTION       PF10= MASTER INQ       PF11= GO TO        PF12= END
```

Screen E

USER INPUT

Employee Indicator is only used for non-paid employees. This will create a record on Personnel, but none on Payroll.

SYSTEM PROVIDED DATA

NPPS sets the Salary Scheduled in accordance with table TSALSTEP based on any change to Pay Table, Grade: Current, or Step and if the following criteria has been met.

1. Action being processed must be an accession, conversion, 702, 703, 713, 721, 740, 741, 866, 892, 893, 894, 002, or 001.
2. Employee's Pay Plan must not equal GM.
3. Employee's Step must not equal 0.
4. Employee's Pay Rate Determinant must equal 0, 5, 6, 7, A, B, C, E, F, or M.

```
NEMXXXXF         (SCREEN)F -         (FREQ. MISC. DATA)    0 OF 0
BY-PASS EDIT: _

NAME                                                          SSN
COOP:ENTRY       0  0  0    > 0_ 0_ 0___   TRAINING DEV PGM           > __
     RET TO DUTY 0  0  0    > 0_ 0_ 0___   NASA SPEC PGM              > ______
     RET TO SCH  0  0  0    > 0_ 0_ 0___   RTD     > _    RTD GRP     > __
SCD: RETIREMENT  0  0  0    > 0_ 0_ 0___   CPP     > __   POSCRIT     > ___
LOCAL TITLE:                              > ___________________________
FERS/TSP:  FERS COVER    > _  TSP SCD         0  0  0    > 0_ 0_ 0___
           TSP STATUS    > _  TSP STAT DATE   0  0  0    > 0_ 0_ 0___
           TSP VEST      > _  TSP ELIG DATE   0  0  0    > 0_ 0_ 0___
           TSP SEPCDE    > _  TSP SEP DATE    0  0  0    > 0_ 0_ 0___
NON NASA PROJ LI             > __________
RETIRED MIL:RETIRE 0  0  0    > 0_ 0_ 0___ PAY STATUS           > _
            SERV COMPONENT    > _          RET BASIS            > _
            SERV PAY GRD      > ___        SERV NUM             > ___________
                                           SERV DESIGNATION     > _
-------------------------------------------------------------------------------
PF1= HELP            PF3= PREV SCREEN     PF5= MAIN MENU
PF6= END ACTION      PF10= MASTER INQ     PF11= GO TO              PF12= END_
```

Screen F

```
NEMXXXXG
                    (SCREEN) G    (MISC. INFREQ.)      0 OF 0
 BY-PASS EDIT: _
 NAME                                                          SSN
               FIELD             SCHOOL           YEAR       LEVEL      GPA
 HIGH                      01001002 > ________                  > _  0.00 > 0.00
 2               > ______           > ________       > ____    > _  0.00 > 0.00
 3               > ______           > ________       > ____    > _  0.00 > 0.00
 4               > ______           > ________       > ____    > _  0.00 > 0.00
 COOP/PMI        > ______           > ________       > ____    > _  0.00 > 0.00
                                         BDYR        > ____     FTELI      >
 LIMITS:                                RETIREMENT:
   SEVERANCE  0.00      > 0.00_____      OPTIONAL              > 0_ 0_ 0___
   DAY             0    > 0__            DISCONT               > 0_ 0_ 0___
   HOURS           0    > 0___           FERS MRA   0  0  0    > 0_ 0_ 0___

 LINE NUMBER           > ________         PARAGRAPH           > ________
RESERVES:  BRANCH     > __ RANK     > __        HEAD OF AGENCY     > _
RETAIN: PAYPLN    > __ GRD    > __ STP    > __ EXP DTE 0  0  0    > 0_ 0_ 0___
-------------------------------------------------------------------------------
 PF1= HELP            PF3= PREV SCREEN                          PF5= MAIN MENU
 PF6= END ACTION      PF10= MASTER INQ       PF11= GO TO        PF12= END
```

Screen G

SYSTEM PROVIDED DATA

NPPS sets the Degree: Bachelor Year to zero if Degree: Highest Level is changing to a value not equal to Bachelors (B), Masters (M), or Doctorate (D).

```
NEMXXXXH              (SCREEN)H -        (SUSPENSE DATES)  0 OF 0
BY-PASS EDIT: _

NAME                                                            SSN

NTE DATES:                                ENDING  DATES:
APPOINTMENT    0  0  0    > 0_ 0_ 0___    CONVERSION   0  0  0    > 0_ 0_ 0___
FURLOUGH       0  0  0    > 0_ 0_ 0___    PROBATION    0  0  0    > 0_ 0_ 0___
SABBATICAL LV  0  0  0    > 0_ 0_ 0___    NEW SUPV     0  0  0    > 0_ 0_ 0___
LEAVE W/O PAY  0  0  0    > 0_ 0_ 0___    TENURE       0  0  0    > 0_ 0_ 0___
LEAVE WITH PAY 0  0  0    > 0_ 0_ 0___    SVC AGRMNT   0  0  0    > 0_ 0_ 0___
POSITION CHG   0  0  0    > 0_ 0_ 0___    SES PROB     0  0  0    > 0_ 0_ 0___
SUSPENSION     0  0  0    > 0_ 0_ 0___    BEGINNING  DATES:
PROMOTION      0  0  0    > 0_ 0_ 0___    NEW SUPV     0  0  0    > 0_ 0_ 0___
RETENTION ALW  0  0  0    > 0_ 0_ 0___    TENURE       0  0  0    > 0_ 0_ 0___
RIF EXTENSION  0  0  0    > 0_ 0_ 0___

-------------------------------------------------------------------------------
PF1= HELP            PF3= PREV SCREEN     PF5= MAIN MENU     PF6= END ACTION
PF10= MASTER INQ     PF11= GO TO          PF12= END
```

Screen H

USER INPUT

Conversion is used for a suspense date and will appear on the Tickler report. The Conversion date is to be used to change an employee to a Career or a Career Conditional Appointment.

```
NEMXXXXI               (SCREEN)I -        (MISC)        0 OF 0
BY-PASS EDIT: _


NAME                                                            SSN
NEW NAME:
      ______________________  ___  ____________  ____________

NEW SSN:  ___ __ ____

FOLLOW UP CODES AND DATES:
1)    > __   0  0  0    > 0_ 0_ 0___      2)    > __   0  0  0    > 0_ 0_ 0___
3)    > __   0  0  0    > 0_ 0_ 0___      4)    > __   0  0  0    > 0_ 0_ 0___
5)    > __   0  0  0    > 0_ 0_ 0___      6)    > __   0  0  0    > 0_ 0_ 0___
7)    > __   0  0  0    > 0_ 0_ 0___      8)    > __   0  0  0    > 0_ 0_ 0___

-------------------------------------------------------------------------------
PF1= HELP            PF3= PREV SCREEN     PF5= MAIN MENU     PF6= END ACTION
PF10= MASTER INQ     PF11= GO TO          PF12= END
```

Screen I

SYSTEM PROVIDED DATA

If an employee's name changes, NPPS sets the Previous Name to the old name.

NPPS changes all historical data for an employee to reflect the current value for SSN, Previous SSN, and Name when that employee's SSN or name changes.

```
                          (SCREEN)J -        (MISC)        0 OF 0
BY-PASS EDIT: _
NEMXXXXJ

NAME                                                          SSN
DETAIL:
  OPM TITLE                                            /
             > ________________________________________ / ________________
  NASA TITLE                                           /
             > ________________________________________ / ________________
  TITLE CODE              > __
  PDN                     > ______        NCC                    > ___ __
  PAY PLAN                > __            OCC CODE               > _____
  GRADE                0  > __            ORG ASSIGNED           > _____
  DUTY STATION            > _________     ENDING DATE 0  0  0    > 0_ 0_ 0___
  INSTALLATION LOCATED       > ____


-------------------------------------------------------------------------------
PF1= HELP         PF3= PREV SCREEN       PF5= MAIN MENU       PF10= MASTER INQ
PF11= GO TO       PF12= END
```

Screen J

```
NEMXXXXK        (SCREEN)K -        (BONUS/DIFF/ALLOW)     0 OF 0
BY-PASS EDIT: _

NAME                                                          SSN

LOCALITY ADJUSTMENT INDICATOR      >

BONUS/DIFFERENTIAL BASIS     > _

RECRUITMENT BONUS %      > __     RECRUITMENT BONUS AMOUNT         > _____
RELOCATION BONUS %       > __     RELOCATION BONUS AMOUNT          > _____

                                  AVLBTY ANNUAL AMNT               > _____
AUO %                    > __     AUO ANNUAL AMOUNT                > _____
RETENTION ALLOW %        > __     RETNTN ALLOW ANNL AMNT           > _____
STAFFING DIFF %          > __     STAFFING DIFF ANNL AMNT          > _____
SUPERVISORY DIFF %       > __     SUPRVSRY DIFF ANNL AMNT          > _____
                                  FOREIGN LANG ANNL AMNT           > _____

-------------------------------------------------------------------------------
PF1= HELP            PF3= PREV SCREEN     PF5= MAIN MENU     PF6= END ACTION
PF10= MASTER INQ     PF11= GO TO          PF12= END
```

Screen K

SYSTEM PROVIDED DATA

NPPS sets the Locality Adjustment Indicator according to table TLOA based on any change to Duty Station. The AVLBTY ANNUAL AMNT is equal to 25 percent of the Adjusted Basic Pay Amt (results 50 cents and over are increased to next whole dollar).

```
NEMXXXXL              (SCREEN)L  -        (MISC. INFREQ.)  0 OF 0
BY-PASS EDIT: _
NAME                                                          SSN

    RATING     YEAR              EFDATE               PATTERN
CUR  0 > _       > __    0  0  0    > 0_ 0_ 0___           > _
PR1  0 > _       > __    0  0  0    > 0_ 0_ 0___           >
PR2  0 > _       > __    0  0  0    > 0_ 0_ 0___           >
PR3  0 > _       > __    0  0  0    > 0_ 0_ 0___           >

AWARDS:
  CHK     YEAR    TYPE   AMOUNT
    > _     > __    > _    > 0.00____
  GROUP     BENEFIT AMOUNT   TIME OFF HRS/LYTD
    > ____    > 0.00_______    > 0.0__ / 0.0
  GROUP TEXT > ______________________________
  AWD BUDGET           > ________

--------------------------------------------------------------------------------
PF1= HELP             PF3= PREV SCREEN       PF5= MAIN MENU
PF6= END ACTION       PF10= MASTER INQ       PF11= GO TO        PF12= END
```

Screen L

SPECIAL PF KEY

The capability exists to input either Net or Gross Award Amount for NOAC 877 On the Spot Awards, but the final On the Spot Award Amount must be Gross. Therefore, when Net Award Amount is entered, **PF9 GROSS AWDAMT** must be used to calculate Gross Award Amount.

If Gross Award Amount is entered, normal processing takes place.

```
 NEMXXXXM                (SCREEN)M -        (CAPPS)       0 OF 0
 BY-PASS EDIT: _
NAME                                                          SSN
AWARDS:                QTY YR                            ASCN ACTION:
  HONORARY            > _   __                             AUTH1  > ___
  PERFORMANCE SES     > _   __                             AUTH2  > ___
  QUALITY INCREASE    > _   __                            EFDATE  > __ __ ____
  SPECIAL ACT         > _   __   PREVIOUS:                 NOAC   > _____
                                   BASIC PAY  > _________
COUNTER CODES:                     DUTY STN   > _________  CVNRSN ACTION:
  APPOINTMENT         > _          GRADE      > __           AUTH1  > ___
  AWARDS              > _          LOCAL ADJ  > _____        AUTH2  > ___
  CAO                 > __         OCC CODE   > _____       EFDATE  > __ __ ____
  CONVERSION          > _          PAY BASIS  > __           NOAC   > _____
  DOWNGRADE           > _          PAY PLAN   > __
  OTHER AWARDS        > __         PAYRAT DET > _          APPOINTMENT:
  PERFORMANCE AWARDS  > __         STEP       > __           AUTH1  > ___
  TRAINING            > __         WORKSCH    > _            AUTH2  > ___
-------------------------------------------------------------------------------
 PF1= HELP         PF3= PREV SCREEN       PF5= MAIN MENU       PF6= END ACTION
 PF11= GO TO       PF12= END
```

Screen M

USER INPUT

Screen **M** will only appear when the NOAC equals 721A or 991. Report 460 generated by the losing installation and forwarded to the gaining installation contains the necessary data for input.

In addition to the four standard PF keys (PF1=Help, PF3=Previous Screen, PF5=Main Menu, and PF12=End), four special PF keys are listed on the personnel action screens. These PF keys are only available during the processing of a personnel action.

PF2=Table Lookup - Directs NPPS to look up the remarks for the Authority Code or titles based on the title codes which you must enter on the first screen of the series (A). You may override the default description or title by typing in the description or title you prefer. The table lookup key does not apply to the salary field. This option is only available on Screen A.

PF4=OPM Messages - Allows you to display the description of any OPM message. This option is useful after you complete all your entries for an action and attempt to place that action on the suspense file. If NPPS finds any relational edit error, it will return you to the first screen of the series and display the OPM Edit codes in the top, left corner of this screen. In order to view a description for a code, press **PF4** and type in the code. This option is only available on the first screen in the series.

PF6=End Action - Used to complete the action without paging through the remainder of the screens available in the series. This option is available on all screens in the series.

PF9=SF 50 REM - Used to display the description of the Remarks Codes to determine the appropriate variables for the specific conditions which apply to the

employee whose action is being processed. This option is only available on the SF 50 Remarks screen of the series.

PF11=GO TO - Allows the user to directly access a specific screen by pressing this key and entering the desired page number when prompted with a pop-up window. This option is available on all screens in the series. This option is also available in PERMAST and HISTMAIN.

Steps to Reach Personnel Action Processing

1. At the Main Menu, select **1** - Personnel.
2. At the Personnel Main Menu, select **1** - Personnel Actions.
3. At the Personnel Actions Main Menu, select **1** - SF50 Personnel Action Processing.

DESCRIPTION OF DATA PROCESSING RESULTS AND OUTPUT

NPPS generates a suspended personnel transaction for each personnel action consisting of the transaction as input.

4.1.1.2 View Master Record

```
COMMAND: ________                    NPPS
NEO1200                   VIEW MASTER RECORD - PERMAST
--------------------------------------------------------------------------------


SSN:  ___ __ ____      TYPE:  _

NAME:  _______________________ _____________
          (LAST NAME)         (FIRST NAME)

     TYPE             DESCRIPTION

      D        RETRIEVE IN DATA BASE FIELD FORMAT
      P        RETRIEVE IN PERSONNEL ACTION FORMAT





--------------------------------------------------------------------------------
 PF1= HELP                  PF5= MAIN MENU                    PF12= END
```

View Master Record (PERMAST)

DESCRIPTION AND EXECUTION

The View Master Record (PERMAST) template is used to retrieve information from an employee's master record.

<u>Steps to Reach View Master Record</u>

1. At the Main Menu, select **1** - Personnel.
2. At the Personnel Main Menu, select **1** - Personnel Action.
3. At the Personnel Actions Main Menu, select **2** - View Master Record.

DESCRIPTION OF DATA PROCESSING RESULTS AND OUTPUT

You have the option to retrieve the information in two formats. You may select to view the record in the Data Base Field Format (**D**) or the Personnel Action Input Format (**P**). The Personnel Action Input Format is displayed in the same order and layout as input during personnel action input. The database format displays the fields alphabetically by database name.

4.1.1.3 Query Suspense File

```
COMMAND: ________                    NPPS
NEO1300                   SUSPENSE QUERY - PERSUSPQ
--------------------------------------------------------------------------------


    LIST ACTIONS FOR EMPLOYEE:
    SSN:  ___ __ ____
    NAME:(LAST,FIRST)   ______________________    ____________

    LIST ACTIONS ON OR BEFORE EFDATE:  __ __ ____

    LIST ACTIONS FOR NOAC:  _____

    LIST ACTIONS FOR SOURCE:  _

    LIST ACTIONS FOR CLERK ID: ____________


--------------------------------------------------------------------------------
 PF1= HELP                  PF5= MAIN MENU                    PF12= END
```

Suspense Query (PERSUSPQ)

DESCRIPTION AND EXECUTION

The Suspense Query (PERSUSPQ) template is used to specify and retrieve existing actions from the suspense file.

This display includes the following:

- SSN
- Transaction Identifier (NOAC)
- Effective Date
- Sequence Number
- Whether or not a combination SF 50/SF 52 was specified
- Whether or not an SF 50/SF 52 has been printed
- Whether or not the action has been applied to the employee's master record
- Whether or not the action was created by online data entry or by a system function (such as Planning Actions)
- Whether or not the transaction has errors
- Whether or not the Edit Bypass Code was specified
- Action Update Clerk

- Whether or not the action is an SF 52

Steps to Reach Suspense Query

1. At the Main Menu, select **1** - Personnel.
2. At the Personnel Main Menu, select **1** - Personnel Actions.
3. At the Personnel Actions Main Menu, select **3** - Query Suspense.

DESCRIPTION OF DATA PROCESSING RESULTS AND OUTPUT

You may select a list of existing actions based on five criteria: (**1**) SSN or Name, (**2**) Effective Date, (**3**) NOAC, (**4**) Source of the action, and (**5**) Clerk ID.

The valid source codes are as follows.

C	Personnel Actions (clerk from online entry)		
P	Planning Actions	A	ACI
T	Mass Transfer	I	Installation-Unique Interface
L	Mass Realignment	F	Mass Furlough
G	Mass Performance Rating	W	Mass Award
H	Mass Change in Health Plan	N	Mass Change in NCC
S	TSP Change	O	Mass Change in Organ. Nam
D	Mass Duty Station Change	J	Mass Locality Payment
B	Mass Change in Appropriation	M	Mass Miscellaneous
R	Mass Return to Duty		

4.1.1.4 Mass Deletion of Suspended Actions

```
COMMAND: ________                    NPPS
NEM1400          MASS DELETION OF SUSPENDED ACTIONS - PDELETE
-------------------------------------------------------------------------------



                              CLERK:  ____________

                             EFDATE:  __ __ ____

                               NOAC:  _____

                PAYTBL (ACI'S ONLY):  ___

                             SOURCE:  _



-------------------------------------------------------------------------------
 PF1= HELP                      PF5= MAIN MENU                      PF12= END_
```

Mass Deletion of Suspended Actions (PDELETE)

DESCRIPTION AND EXECUTION

The Mass Deletion of Suspended Actions (PDELETE) template is used to specify and delete a group of personnel actions on the suspense file.

<u>Steps to Reach Mass Deletion of Suspended Actions</u>

1. At the Main Menu, select **1** - Personnel.
2. At the Personnel Main Menu, select **1** - Personnel Actions.
3. At the Personnel Actions Main Menu, select **4** - Mass Deletion of Suspended Actions.

DESCRIPTION OF DATA PROCESSING RESULTS AND OUTPUT

The group of actions to be deleted will be selected by Source, NOAC, Effective Date, or Action Update Clerk. Pay Table may be specified when the NOAC is 894.

4.1.1.5 SF 52 Personnel Action Processing

```
COMMAND: ________                    NPPS
NEO1500       SF 52 PERSONNEL ACTION PROCESSING MENU - PERACT52
--------------------------------------------------------------------------------

SSN: ___ __ ____  NOAC: _____  EFDATE: __ __ ____  FUNC: _
NAME(LAST,FIRST): ______________________  ____________

     FUNCTION                DESCRIPTION

        A            ADD THE ACTION TO SUSPENSE
        C            CHANGE AN EXISTING SUSPENSE ACTION
        D            DELETE AN EXISTING SUSPENSE ACTION
        E            CHANGE THE EFDATE OF AN EXISTING SUSPENSE ACTION
        H            CHANGE SSN ON ACCESSION ACTION
        R            RETRIEVE AN EXISTING SUSPENSE ACTION
        S            RE-SEQUENCE SUSPENSE ACTIONS



--------------------------------------------------------------------------------
 PF1= HELP                  PF5= MAIN MENU                    PF12= END
```

SF 52 Personnel Action Processing Menu (PERACT52)

DESCRIPTION AND EXECUTION

The SF 52 Personnel Action Processing Menu (PERACT52) is used to add an SF 52 action to the suspense file, change or delete an SF 52 action on the suspense file, view an existing SF 52 suspense action, change the effective date of an existing SF 52 action, or re-sequence SF 52 suspense actions. First, you must enter the necessary information about the employee (i.e., SSN, NOAC, Effective Date, or Name). Then select a function by entering its letter in the blank marked FUNC. All the available functions are listed on the screen.

The SF 52 Personnel Action Processing system functions exactly as the SF 50 Personnel Action Processing system, except "X" is generated in the Bypass Edit field (an "S" is generated for NON-NASA employees). Refer to Section 4.1.1.1 for details on how to enter a personnel action and convert an SF 52 action to an SF 50 action.

4.1.2 Planning Action Menu

```
COMMAND: ________                    NPPS
NEM2000              PLANNING ACTIONS TEMPLATE - PLAN
                         (MASTER TO SUSPENSE FILE)
-------------------------------------------------------------------------------

    (X OR                                          START          STOP
    BLANK)                                        MM DD YY       MM DD YY

      _    CHANGE IN TENURE GROUP         (880)  __ __ __       __ __ __

      _    WITHIN GRADE INCREASE      (891/893)  __ __ __       __ __ __

      _    THRIFT SAVING PLAN             (943)  __ __ __       __ __ __
           PRINT TSP LETTER  _ (Y/N)

                       880'S     891'S     893'S     943'S     991'S
           SUSPENDED
           REJECTED

-------------------------------------------------------------------------------
 PF1= HELP                       PF5= MAIN MENU                      PF12= END
```

Planning Actions Template (PLAN)

DESCRIPTION AND EXECUTION

The Planning Actions Template (PLAN) provides for the advance preparation of three specific personnel actions, as illustrated in Figure 4.1.2-1. All information required for processing is available from the master record, or is system generated. Eligible employees are selected based upon the Eligibility Beginning and Ending Dates which you provide. Following are the four Personnel Actions which are created and suspended for future maturation: (1) Changes in Tenure (NOAC 880), (2) WIG Increases (NOAC 893, 891), (3) Changes in TSP Eligibility (NOAC 996), and (4) Adjusted Next WIG Date due to excess LWOP (NOAC 991).

<u>Steps to Reach Planning Actions Template</u>

1. At the Main Menu, select **1** - Personnel.
2. At the Personnel Main Menu, select **2** - Planning Action.

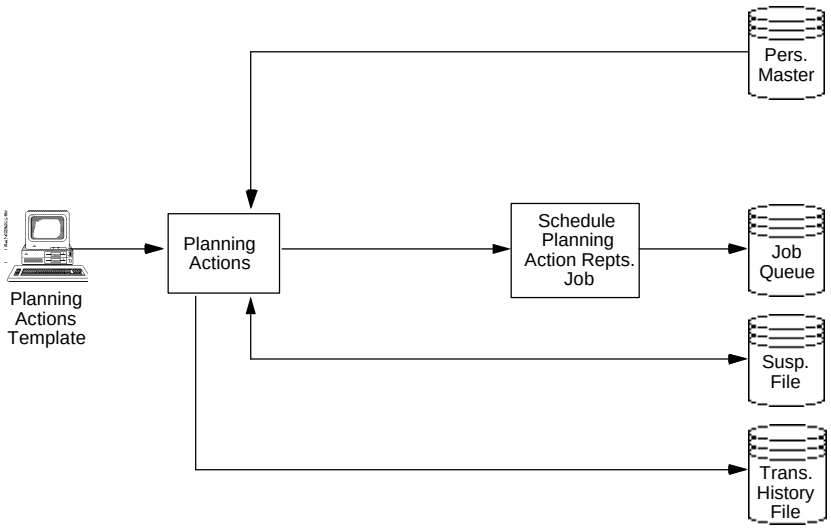

Figure 4.1.2 - 1 Planning Actions

DESCRIPTION OF DATA PROCESSING RESULTS AND OUTPUT

Upon completion of the planning action requested, NPPS displays the count of the number of actions suspended and rejected for the specified NOAC. In addition, each of the four types of planning actions has unique output as described below.

Change in Tenure (NOAC 880) - Generated and suspended for each employee meeting the eligibility criteria. In addition, all the dates necessary to print the SF 50 will be created as part of the suspended transaction.

WIG Increase (NOAC 891, 893) - Generated and suspended for each employee meeting the eligibility criteria. In addition, all data necessary to print the SF 50 will be available and two reports are available for scheduling as batch jobs.

- LWOP Report
- Acceptable Level of Competence Report (generated for each employee transaction)

Adjusted Next WIG Date (NOAC 991) - Generated and suspended for each eligible employee who has excess LWOP that causes the waiting period for the employee's next WIG increase to be adjusted beyond the Stop date entered on the input screen.

During this process, NPPS first checks to see if the employee has excess LWOP. If so, it then calculates the adjusted date when the individual will no longer have excess LWOP. The system then checks to see if the adjusted date still falls within the date range you provided when you requested the planning action. If the adjusted date does fall within this range, NPPS will still build a NOAC 891 or NOAC 893 for this individual. If not, NPPS cannot build a NOAC 891 or NOAC 893, but it does change the next WIG date via a NOAC 991 in order to create an

appropriate eligibility date. As a result, this individual will be picked up during the next WIG planning action providing he/she does not accumulate additional excess LWOP.

TSP Eligibility (NOAC 943) - Generated and suspended for each employee meeting the eligibility criteria. In addition, the option to create a TSP letter (NE00004, TSP letter) for each eligible employee is available through the batch job scheduler capability. At the time that each TSP Eligibility action is matured, the TSP information is integrated into the Payroll file to start the automatic one percent agency contribution for those employees under FERS.

4.1.3 Mature Process Menu

```
COMMAND: ________                    NPPS
NEO3000                   MATURE PROCESS TEMPLATE - MATURE
--------------------------------------------------------------------------------

    ALL ACTIONS WITH EFFECTIVE DATES ON OR BEFORE THIS DATE WILL MATURE

                           MATURE DATE: __ __ __


NAME SEARCH:
  NAME (LAST, FIRST): _______________________   ____________


MATURE THESE SSN'S ONLY: ___ __ ____ , ___ __ ____ , ___ __ ____ , ___ __ ____
                         ___ __ ____ , ___ __ ____ , ___ __ ____ , ___ __ ____
                         ___ __ ____ , ___ __ ____ , ___ __ ____ , ___ __ ____
                         ___ __ ____ , ___ __ ____ , ___ __ ____ , ___ __ ____
                         ___ __ ____ , ___ __ ____ , ___ __ ____ , ___ __ ____


--------------------------------------------------------------------------------
 PF1= HELP                  PF5= MAIN MENU                    PF12= END
```

Mature Process Template (MATURE)

DESCRIPTION AND EXECUTION

The Mature Process Template (MATURE) is used to apply the suspended actions for all employees or selected employees based on the Effective Date specified, and thereby updates each employee's current master record, as illustrated in Figure 4.1.3-1. NPPS applies suspended transactions with an effective date on or before the date specified when you press **ENTER**. You have the option of maturing all actions that meet the date criteria or only the actions for the specified SSNs entered.

When mature processing is initiated, NPPS automatically edits each suspended action unless you elected to bypass the edits when the action was entered into NPPS. If an action fails an edit, NPPS places the action in an error status and all subsequent actions for that SSN will not be applied to the employee's master record. You may correct the error and reprocess the action. You must also reprocess all subsequent actions in order to remove the error flag set for each action. You may then re-execute the mature.

NPPS matures multiple actions with the same Effective Date for a single SSN in the sequence defined. NPPS recomputes an employee's normal pay and deductions based on a change in Birth Date, FEHB Plan Code, FEGLI Plan Code, Retirement Plan, or Salary when the action is applied to the employee's record.

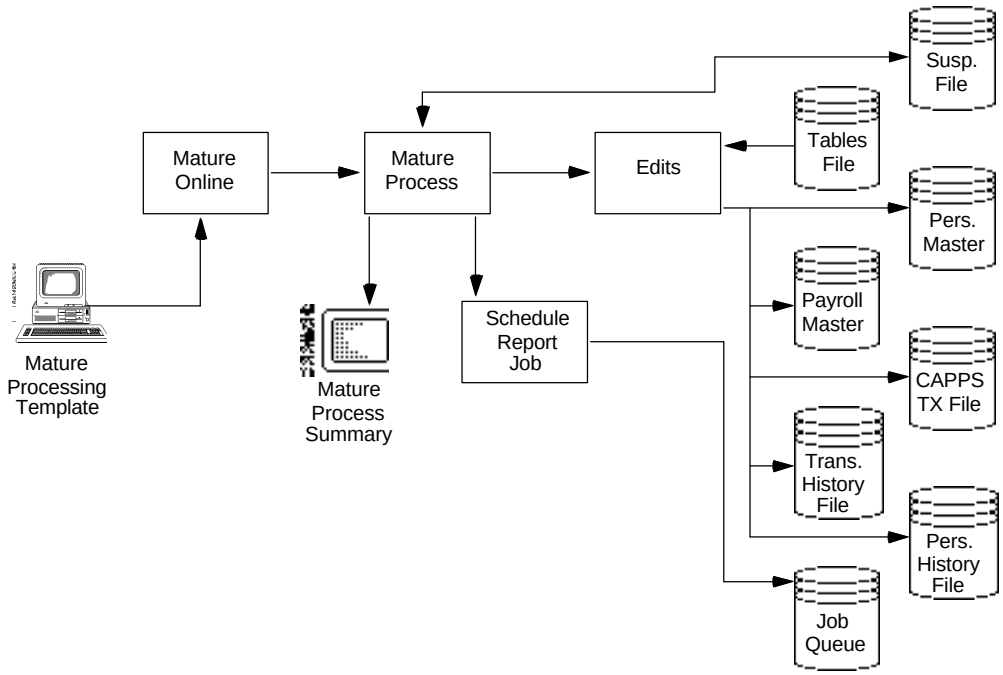

Figure 4.1.3-1 Mature Process

Steps to Reach Mature Process Template

1. At the Main Menu, select **1** - Personnel.
2. At the Personnel Main Menu, select **3** - Mature Process.

DESCRIPTION OF DATA PROCESSING RESULTS AND OUTPUT

Upon completion of the mature processing, each employee's record reflects the most current information as of the last matured transaction. In addition, two reports are generated from the Mature Process: (1) Mature Transaction and Error Report and (2) Mature Transaction Integration Report. If there are no suspended personnel transactions that fall within the specified date range, these reports will not be generated. This includes an online (screen display) summary report of any mature processing error which reflects such information as the SSN, Transaction Identifier, Effective Date, and Error Message. To run Mature using the Batch Job Scheduler (BJS), refer to Section 5, Batch User Capability.

4.1.4 SF 50/SF 52 Processing Menu

```
COMMAND: ________                    NPPS
NEM4000                SF50/SF52 PRINT SELECTION - SEL50
(X OR BLANK)
             SELECT FORM:  SF50  _  SF52  _
      _      ALL THAT HAVE NOT BEEN PRINTED
      _      ALL WITH FACILITY  _
      _      ALL WITH CLERK ID  ____________
      _      ALL WITH EFDATES  __ __ __ THRU __ __ __
      _      ALL WITH THESE NOAC'S   _____ , _____ , _____ , _____
                                     _____ , _____ , _____ , _____
      _      ALL FOR THESE SSN'S  ___ __ ____ , ___ __ ____ , ___ __ ____
                                  ___ __ ____ , ___ __ ____ , ___ __ ____
-------------------------------------------------------------------------------
             PRINT DESTINATION  ________   XEROX COPIES __
      _      ALIGNMENT PRINTING
      _      DISREGARD PRINT FLAG FOR SELECTION
      _      DO NOT SET PRINT FLAG
     __      SELECT THIS NUMBER AND STOP
      _      REPRINT LAST SET
-------------------------------------------------------------------------------
 PF1= HELP                  PF5= MAIN MENU                    PF12= END
```

SF 50/SF 52 Print Selection (SEL50)

DESCRIPTION AND EXECUTION

The SF 50/SF 52 Print Selection (SEL50) template is used to print the SF 50 Notification of Personnel Action or the SF 52 Request for Personnel Action for any employee transaction requiring an OPM/NOAC, as illustrated in Figure 4.1.4-1. Eleven options are displayed on this screen. The options are divided into two groups and the groups are separated by a dotted line. You select an option by typing **X** in the blank to the left of the option.

The first group of options allows you to specify which SF 50/SF 52 should be printed. You may select one of the following: All Not Printed, All with Efdates (beginning date) Through (ending date), All with these NOACs (specify a maximum of eight NOACs), All for these SSNs (specify a maximum of six SSNs), All with facility, or All with Clerk ID. If you select one of these options alone, the system will print the type of SF 50/SF 52 you request <u>which has not already been printed</u>.

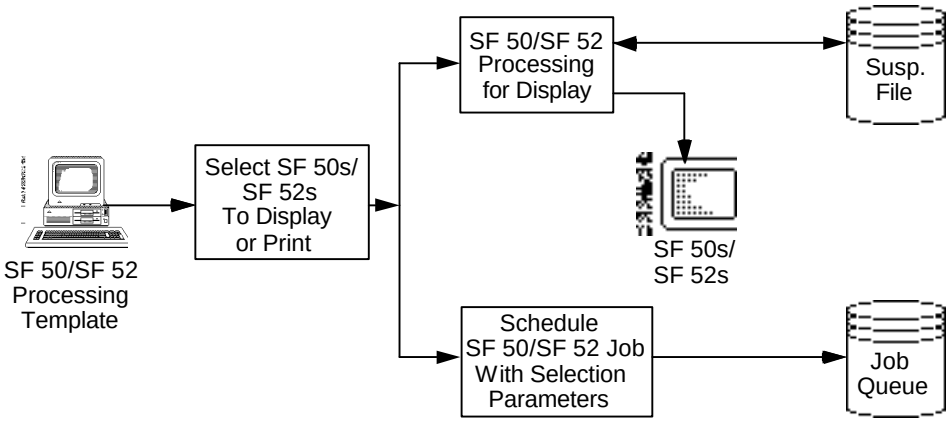

Figure 4.1.4-1 SF 50/SF 52 Processing Menu

You may select one or more of the options in the second group in order to further define the set of SF 50s/SF 52s you want to print. To print five alignment SF 50s/SF 52s before your selected SF 50s/SF 52s, select the Alignment option. To reprint SF 50s/SF 52s which have already been printed, you may select the Disregard Print Flag for Selection option. If you are executing a trial print, you may select Do Not Set Print Flag. To preview a select number of SF 50s/SF 52s before printing a large group, type the number of SF 50s/SF 52s to be printed in the blank to the left of the Select This Number And Stop option. To reprint exactly the group of SF 50s/SF 52s selected for the last printing, choose Reprint Last Set. You may use a combination of selections with the one exception of "Reprint Last Set." This option should be selected by itself only. All SF 50s/SF 52s will go to the default printer destination unless specified otherwise. When you select a print destination, the Xerox copies is defaulted at 3 for SF50 and only one SF52 form is printed for any type of print destination.

Three other SF 50/SF 52 print items are available during personnel action processing at the Remarks screen. The first item is Combined 50/52. If you enter **Y** in this field, NPPS prints a dual SF 50/SF 52 (i.e., two separate actions on the same SF 50/SF 52) when an employee has two or more personnel actions with the same effective date and they are sequenced first and second for that day. If you leave this field blank, NPPS prints only a single SF 50/SF 52 for this action.

The second item, 50/52 Print Status, displays "P" if an SF 50/SF 52 has been printed for this action. This "P" represents the Print Flag previously mentioned.

NPPS determines whether or not an SF 50 is required for each action as defined in table TNOAC. However, you may choose to make this determination yourself using the Required 50 field. This is the third SF 50 print item on the SF 50 Remarks screen. Type **N** in the blank following this item if an SF 50 is not required for this action; otherwise, leave the item blank. This option is not available on the SF 52.

Steps to Reach SF 50/SF 52 Print Selection

1. At the Main Menu, select **1** - Personnel.
2. At the Personnel Main Menu, select **4** - SF 50/SF 52 Processing.

DESCRIPTION OF DATA PROCESSING RESULTS AND OUTPUT

You may initiate printing of all SF 50s/SF 52s or select a group of SF 50s/SF 52s (i.e., all that have not yet printed, all for selected employees, all for selected NOACs), all SF 50s/SF 52s for a selected facility, or all SF 50s/SF 52s for a selected clerk ID. This is done by entering **Y** in the blank to the left of your selection and entering other relevant information as required. For example, to print SF 50s for only certain employees, enter **Y** in the blank to the left of the selection, All for these SSNs. Then, **TAB** to the blanks to the right of the option and enter up to six SSNs. You may also select the number of SF 50s/SF 52s to be printed by entering this number in the blank to the left of the selection, Select This Number and Stop.

You may determine the contents to be printed in certain blocks of the SF 50 (25, 40, 41, 42, 43, and 44). This is done using the TSF50BLK personnel table. This table lists the 10 items which may be displayed in the six blocks available. Type the number of the desired block to the left of the selected item. You may choose one item per block.

If you do not specify otherwise, the SF 50 Signature Code will be "1." You may view all the table entries for the SF 50 through the table maintenance capability which allows you to view the SF 50 Comments table (refer to Section 4.1.5).

The data printed in Blocks 7 and 15 is a combination of the descriptions that are input into tables TORG and CTLPER.

4.1.5 Tables Maintenance Menu

```
COMMAND: ________                    NPPS
NEO5000                 PERSONNEL TABLES MENU - PERTAB
-------------------------------------------------------------------------------
                          TABLE RELEASE:


                     ENTER ONE OF THE FOLLOWING SELECTIONS

                          1  CORE TABLES MAINTENANCE

                          2  LOCAL TABLES MAINTENANCE


                                SELECTION: _




-------------------------------------------------------------------------------
 PF1= HELP                  PF5= MAIN MENU                    PF12= END
```

Personnel Tables Menu (PERTAB)

DESCRIPTION AND EXECUTION

The Personnel Tables Menu (PERTAB) is used to maintain personnel tables. This menu offers two selections.

1. Core Tables Maintenance: Select a personnel core table for viewing or updating.
2. Local Tables Maintenance: Select a personnel local table for viewing or updating.

<u>Steps to Reach Personnel Tables Menu</u>

1. At the Main Menu, select **1** - Personnel.
2. At the Personnel Main Menu, select **5** - Tables Maintenance.

4.1.5.1 Core Tables Maintenance Menu

```
* MAKE SELECTION OR HIT ENTER FOR ADDITIONAL TABLE IDS

COMMAND: ________                    NPPS
NEO5010              PERSONNEL CORE TABLES MENU - PERCORE

  TABLE         TABLE                        TABLE         TABLE
   ID        DESCRIPTION                      ID        DESCRIPTION
 --------    ------------------           --------     ------------------

 TAGENCY     AGENCY CODE                  TANUIND      ANNUITANT IND
 TAUTH       AUTHORITY CODE               TAWDTYP      AWARD TYPE
 TBONUS      BONUS DIFF BASIS             TCOMENT      SF50 COMMENTS
 TCPP        COMPETITIVE PLAN             TDEGFLD      EDUCATIONAL FIELD
 TDEGLEV     DEGREE LEVEL                 TDEGSCH      EDUCATIONAL SCHOOL
 TDEPARTD    DEPART DESTINATION           TDEPARTR     DEPART REASON
 TDTYSTN     DUTY STATION                 TDTYSTS      DUTY STATUS
 TEDLEV      EDUCATIONAL LEVEL            TFEGLI       FED GROUP LIFE INS
 TFEHB       HEALTH INSURANCE             TFUNCLS     FUNCTION CODE
 THNDICP      HANDICAP DESC.

ENTER THE TABLE ID OF THE TABLE YOU WISH TO PROCESS ==>  ________

-------------------------------------------------------------------------------
 PF1= HELP           PF3= PREV SCREEN   PF5= MAIN MENU        PF12= END
```

Personnel Core Tables Menu (PERCORE)

DESCRIPTION AND EXECUTION

The Personnel Core Tables Menu (PERCORE) is used to select a personnel core table to be viewed or updated. The listing of tables is displayed on multiple screens. You may move forward through the table list by pressing **ENTER**. When you locate the ID and description of the table you want to view or modify, type the ID in the blank provided at the bottom right corner of the screen and press **ENTER** one more time.

When you select a table, the first entry is displayed on the screen appropriate for the table selected. You now have six functions available for your use when viewing or modifying this table: add a new entry to the table (A=Add), view multiple table entries on a single screen (B=Browse), change an existing table entry (C=Change), delete an existing table entry (D=Delete), view the next table entry (N=Next), and retrieve information regarding an existing table entry (R=Retrieve).

<u>Steps to Reach Personnel Core Tables Menu</u>

1. At the Main Menu, select **1** - Personnel.
2. At the Personnel Main Menu, select **5** - Tables Maintenance.
3. At the Personnel Tables Menu, select **1** - Core Tables Maintenance.

4.1.5.2 Local Tables Maintenance Menu

```
* NO MORE TABLE IDS TO DISPLAY (TO REPEAT THE LIST, HIT ENTER)

COMMAND: ________                    NPPS
NEO5020             PERSONNEL LOCAL TABLES MENU - PERLOCAL

  TABLE         TABLE                        TABLE         TABLE
   ID        DESCRIPTION                      ID        DESCRIPTION
 --------    ------------------           --------     ------------------

 TADMINLV    ADMIN. LEVEL                 TAWDBDGT     AWARD BUDGET CODE
 TCMPAREA    COMPETITIVE AREA             TEMPIND      EMPLOYEE INDICATOR
 TFACILTY    FACILITY CODE                TFINSTM      FINANCIAL STATEMENT
 TFOLLOW     FOLLOW UP CODE               TORG         ORGANIZATION TABLE
 TPOSCRIT    POSITION CRITERIA            TPOSTYPL     POSITION TYPE LOC
 TPRJLINE    PROJECT LINE ITEM            TREQFLD      REQUIRED FIELD TBL
 TRTDGRP     RANDOM TEST GROUP            TSF50BLK     SF50 BLOCK
 TSIGNAT     SF50 SIGNATURE               TTITLE       TITLES TABLE
 TTRNDEV     TRAINING/DEV PGM


ENTER THE TABLE ID OF THE TABLE YOU WISH TO PROCESS ==>  ________

--------------------------------------------------------------------------------
 PF1= HELP           PF3= PREV SCREEN   PF5= MAIN MENU        PF12= END
```

Personnel Local Tables Menu (PERLOCAL)

DESCRIPTION AND EXECUTION

The Personnel Local Tables Menu (PERLOCAL) is used to select a personnel local table to be viewed or updated. The listing of tables is displayed on multiple screens. You may move forward through the table list by pressing **ENTER**. When you locate the ID and description of the table you want to view or modify, type the ID in the blank provided at the bottom right corner of the screen and press **ENTER** one more time.

When you select a table, the first entry is displayed on the screen appropriate for the table selected. You now have six functions available for your use when viewing or modifying this table: add a new entry to the table (A=Add), view multiple table entries on a single screen (B=Browse), change an existing table entry (C=Change), delete an existing table entry (D=Delete), view the next table entry (N=Next), and retrieve information regarding an existing table entry (R=Retrieve).

<u>Steps to Reach Personnel Local Tables Menu</u>

1. At the Main Menu, select **1** - Personnel.
2. At the Personnel Main Menu, select **5** - Tables Maintenance.
3. At the Personnel Tables Menu, select **2** - Local Tables Maintenance.

USER INPUT

There are two types of personnel tables: Core tables and Local tables. The Core tables are developed and maintained centrally. The Local tables are populated and maintained locally by each installation. The following is a list of all the local tables.

ID	NAME	DESCRIPTION
TADMINLV	Administrative Level	NPPS uses this table to validate the Administrative Level field.
TAWDBDGT	Award Budget Code	NPPS uses this table to validate the Award Budget Code field.
TCMPAREA	Competitive Area	NPPS uses this table to generate a Competitive Area from the Duty Station to be used by the Retention Register (Core Report 252).
TEMPIND	Employee Indicator	NPPS uses this table to validate the Employee Indicator field.
TFACILTY	Facility Code	NPPS uses this table to validate the Facility Code and to generate the Facility data needed for NPPS Core Reports.
TFINSTM	Financial Statement Code	NPPS uses this table to validate the Financial Statement Code field.
TFOLLOW	Follow Up Code	NPPS uses this table to validate the Follow Up Code field and then provide its corresponding description.
TORG	Organization Code	NPPS uses this table to validate the Organization Assigned and Organization Located fields, as well as to retrieve the titles for these codes.
TPOSCRIT	Position Criticality	NPPS uses this table to validate the Position Criticality field.
TPOSTYPL	Position Type Local	NPPS uses this table to validate the Position Type Local field.
TPRJLINE	Project Line Item	NPPS uses this table to validate the Project Line Item field.
TREQFLD	Required Field	NPPS uses this table to allow optional fields on personnel action screens to be changed to required fields.

ID	NAME	DESCRIPTION
TRTDGRP	RTDGRP	NPPS uses this table to validate the Random Testing Designator Group (RTDGRP) field.
TSF50BLK	SF 50 Block Number	NPPS uses this table to allow for data fields or literals to be defined for default printing in blocks 41, 42, 43, or 44 of the SF 50.
TSIGNAT	SF 50 Signature	NPPS uses this table to validate the local values for SF 50 Signature Code, as well as to look up the name and title of the person required to sign the SF 50.
TTITLE	Title Table	NPPS uses this table to generate Title: NASA, Title: OPM, and Title: Local.
TTRNDEV	Training/Dev Program	NPPS uses this table to validate the Training/Dev Program field.

DESCRIPTION OF DATA PROCESSING RESULTS AND OUTPUT

Following is a four-screen example of the table maintenance process. Select **TFOLLOW** from the Personnel Local Tables.

```
* NO MORE TABLE IDS TO DISPLAY (TO REPEAT THE LIST, HIT ENTER)

COMMAND: ________                    NPPS
NEO5020             PERSONNEL LOCAL TABLES MENU - PERLOCAL

  TABLE         TABLE                        TABLE         TABLE
   ID        DESCRIPTION                      ID        DESCRIPTION
 --------    ------------------           --------     ------------------

 TADMINLV    ADMIN. LEVEL                 TAWDBDGT     AWARD BUDGET CODE
 TCMPAREA    COMPETITIVE AREA             TEMPIND      EMPLOYEE INDICATOR
 TFACILTY    FACILITY CODE                TFOLLOW      FOLLOW UP CODE
 TORG        ORGANIZATION TABLE           TPOSCRIT     POSITION CRITERIA
 TPOSTYPL    POSITION TYPE LOC            TPRJLINE     PROJECT LINE ITEM
 TREQFLD     REQUIRED FIELD TBL           TRTDGRP      RANDOM TEST GROUP
 TSF50BLK    SF50 BLOCK                   TSIGNAT      SF50 SIGNATURE
 TTITLE      TITLES TABLE                 TTRNDEV      TRAINING/DEV PGM



ENTER THE TABLE ID OF THE TABLE YOU WISH TO PROCESS ==>  TFOLLOW_

--------------------------------------------------------------------------------
 PF1= HELP           PF3= PREV SCREEN   PF5= MAIN MENU        PF12= END
```

Selection of TFOLLOW on the Personnel Tables Menu

The next screen shows the first entry for this table.

```
COMMAND: ________                    NPPS
NEO5120                     FOLLOW UP CODE - TFOLLOW
--------------------------------------------------------------------------------



 FUNCTION: B            FOLLOW UP CODE:  AA


 REMARKS:  MATERNITY LEAVE END_____________________________________

           ________________________________________________________


--------------------------------------------------------------------------------
 FUNCTIONS:  A= ADD  B= BROWSE   C= CHANGE   D= DELETE   N= NEXT   R= RETRIEVE
 PF1= HELP           PF3= PREV SCREEN   PF5= MAIN MENU        PF12= END
```

Follow Up Code

The third screen shows the use of the browse function to display a list of multiple table entries. Notice that the table entry "Excused Leave End" has been marked with an "X" to indicate that the record is to be changed.

```
* TO CHANGE A RECORD, PLACE AN 'X' ON THAT LINE AND HIT ENTER

COMMAND: ________                    NPPS
NEO5198                    FOLLOW UP CODE TABLE BROWSE
-------------------------------------------------------------------------------

     BEGINNING  FOLLOW UP CODE  DD00000001

SEL  FOLLOW UP CODE          REMARKS

 _   AA             MATERNITY LEAVE END

 _   BB             MILITARY LEAVE END

 X   CC             EXCUSED LEAVE END

 _   DD             LEAVE END

 _

-------------------------------------------------------------------------------
 PF1= HELP           PF3= PREV SCREEN   PF5= MAIN MENU        PF7= BACKWARD
 PF8= FORWARD        PF12= END
```

Browse Follow Up Code

The final screen displays the "Excused Leave End" entry for the Follow-Up Code Table.

```
COMMAND: ________                    NPPS
NEO5120                    FOLLOW UP CODE - TFOLLOW
-------------------------------------------------------------------------------


 FUNCTION: B           FOLLOW UP CODE:  CC


 REMARKS:  EXCUSED LEAVE END_____________________________________

           ______________________________________________________




-------------------------------------------------------------------------------
 FUNCTIONS:  A= ADD  B= BROWSE   C= CHANGE   D= DELETE   N= NEXT   R= RETRIEVE
 PF1= HELP           PF3= PREV SCREEN   PF5= MAIN MENU        PF12= END
```

Excused Leave End

INTERRELATIONSHIPS

NPPS requires you to enter a default hierarchical structure for the organizations at your installation. You enter this default structure in a field called "Org Hierarchical Structure" on the Personnel Processing Control template. After you establish a structure, NPPS uses this structure to look up organization names for printing SF 50s.

For example, if the employee's Organization Assigned Code is FD321 and the default value for the hierarchical structured organization is A111, NPPS will generate the following Organization Assigned Codes by substituting the employee's Organization Assigned Code into the default structure. The accompanying Organization Titles will be printed on the SF 50.

Given:

Default Value for Hierarchical Structured Org	A111
Employee's Organization Assigned Code	FD321

NPPS generates:

Mission Support Directorate	FA111
Data Processing Systems Division	FD111
Communications Branch	FD311
Network Section	FD321

If you want to change the organization name by overriding the default structure, you may do so in any or all four levels for the user-specified Organization Assigned Code. You enter the override through the TORG table.

```
COMMAND:  _______                    NPPS
NEO5131                    ORGANIZATION TABLE - TORG
-------------------------------------------------------------------------------



 FUNCTION:  C        ORGANIZATION CODE: AH000



  DESCRIPTION: NPPS ORG TABLE 4_________________________


  SF50 NON-STUCTURED INDICATOR: X        ORG(S) TO PRINT ON SF50: AA111
                                                                  AH111
                                                                  AH711



-------------------------------------------------------------------------------
FUNCTIONS:  A= ADD   B= BROWSE   C= CHANGE   D= DELETE   N= NEXT   R= RETRIEVE
 PF1= HELP           PF3= PREV SCREEN   PF5= MAIN MENU        PF12= END
```

Organization Table (TORG)

In the example displayed in the Organization Table (TORG) screen, NPPS will override default value of A111 when it looks up the employee's Organization Assigned Code, AH000, and discovers that you have specified the organizations which should print on the SF 50 in the TORG table under Organization Code AH000. NPPS will then override organizations displayed above (AA111, AH111, and AH711) to the designated Organization Titles which should be printed on the SF 50. The following titles would be printed on the SF 50 based on the non-structured organization displayed in the above figure.

Given:

Employee's Organization Assigned Code	AH000

NPPS generates:

NPPS Directorate	AA111
Personnel Systems Division	AH111
SF 50 Branch	AH711
Organization Title Section	AH000

CHANGING FIELD ATTRIBUTES IN PERACT USING TREQFLD

To change a field's attribute from optional to required (or vice versa), first retrieve the appropriate personnel action screen by NOAC.

```
COMMAND: ________                    NPPS
 NEO5182          INSTALLATION REQUIRED FIELDS TABLE - TREQFLD
-------------------------------------------------------------------------------
               FUNCTION: R         NOAC: 001__         SCREEN: A
 _ BIRTH DATE                NAME (LAST, FIRST)        NOAC NTE
 _ NOAC2                   _ NOAC2 NTE               _ AUTH1
 _ AUTH2                   _ OPM TTL                 _ TITLE CODE
 _ NASA TTL                _ PDN                     _ NCC
 _ SUPIND                  _ PAY PLAN                _ OCC CODE
 _ GRADE                   _ STEP                    _ PAYBASIS









                        R= REQUIRED  BLANK= OPTIONAL
-------------------------------------------------------------------------------
FUNCTIONS:  C= CHANGE  N= NEXT  R= RETRIEVE
 PF1= HELP          PF3= PREV SCREEN          PF5= MAIN MENU          PF12= END
```

Retrieve Screen By NOAC

Using the Change (C) function, enter an R next to the desired field to change the field's attribute to required. Enter a "blank" to change the attribute to optional. You will only be able to enter a value beside fields that are defined as optional input for the NOAC specified.

```
COMMAND: ________                    NPPS
 NEO5182          INSTALLATION REQUIRED FIELDS TABLE - TREQFLD
-------------------------------------------------------------------------------
               FUNCTION: c         NOAC: 001__         SCREEN: A
 _ BIRTH DATE                NAME (LAST, FIRST)        NOAC NTE
 _ NOAC2                   _ NOAC2 NTE                 AUTH1
 R AUTH2                   _ OPM TTL                 _ TITLE CODE
 _ NASA TTL                _ PDN                     _ NCC
 _ SUPIND                  _ PAY PLAN                _ OCC CODE
 _ GRADE                  _ STEP                    _ PAYBASIS









                      R= REQUIRED  BLANK= OPTIONAL
-------------------------------------------------------------------------------
FUNCTIONS:  C= CHANGE  N= NEXT  R= RETRIEVE
 PF1= HELP          PF3= PREV SCREEN          PF5= MAIN MENU          PF12= END
```

Change Function

Press **ENTER** to update the table.

```
* 82XXXX001  A CHANGED IN TREQFLD TABLE


COMMAND: ________                    NPPS
 NEO5182          INSTALLATION REQUIRED FIELDS TABLE - TREQFLD
-------------------------------------------------------------------------------
              FUNCTION: R         NOAC: 001__         SCREEN: A
 _ BIRTH DATE                NAME (LAST, FIRST)        NOAC NTE
 _ NOAC2                   _ NOAC2 NTE               _ AUTH1
 R AUTH2                   _ OPM TTL                 _ TITLE CODE
 _ NASA TTL                _ PDN                     _ NCC
 _ SUPIND                  _ PAY PLAN                _ OCC CODE
 _ GRADE                   _ STEP                    _ PAYBASIS









                       R= REQUIRED  BLANK= OPTIONAL
-------------------------------------------------------------------------------
FUNCTIONS:  C= CHANGE  N= NEXT  R= RETRIEVE
 PF1= HELP          PF3= PREV SCREEN          PF5= MAIN MENU          PF12= END
```

Installation Required Fields Table

The AUTH2 field will now be required input for all NOAC 001 personnel actions.

4.1.5.3 ACI Menu

```
COMMAND: ________                NPPS
NEM8000                       ACI MENU  - ACIMENU
-------------------------------------------------------------------------------



              ENTER ONE OF THE FOLLOWING SELECTIONS: _


                        1 - ACI

                        2 - GM ACI









-------------------------------------------------------------------------------
 PF1= HELP                 PF5= MAIN MENU                    PF12= END
```

ACI Menu (ACIMENU)

DESCRIPTION AND EXECUTION

The ACI Menu (ACIMENU) is used to select one of two options, as illustrated in Figure 4.1.7-1.

1. ACI: Apply an ACI to the suspense file.
2. GM ACI: Apply an ACI to the suspense file for GM employees.

<u>Steps to Reach the ACI Menu</u>

1. At the Main Menu, select **1** - Personnel.
2. At the Personnel Main Menu, select **6** - ACI.

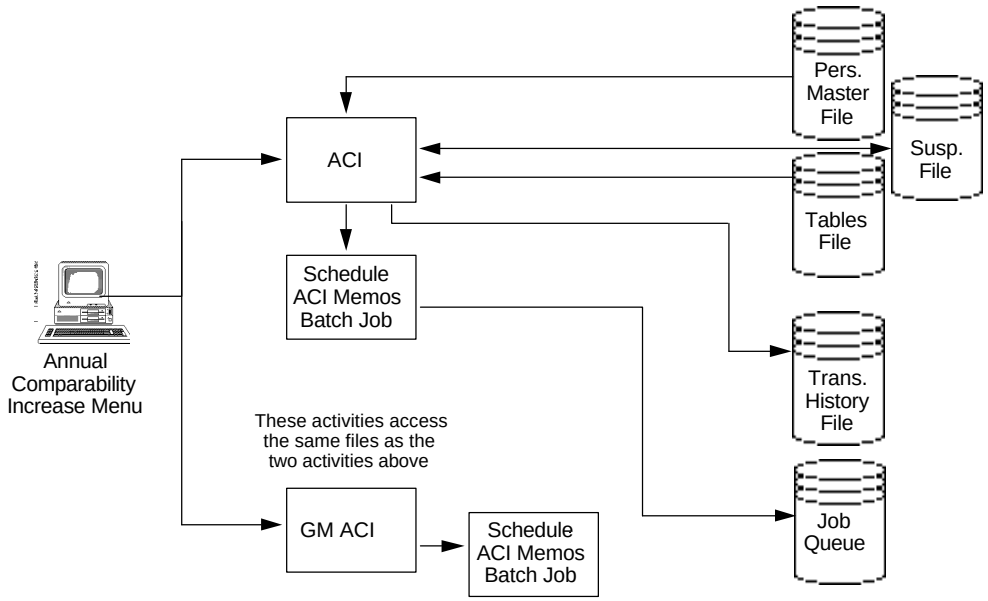

Figure 4.1.6 - 1 ACI

4.1.5.4 ACI

```
COMMAND: ________                    NPPS
NEM8001          ANNUAL COMPARABILITY INCREASE - ACI (894)
--------------------------------------------------------------------------------

  AUTH1:  ___  ____________________________________      EFDATE: 4_ 20 92
  AUTH2:  ___  ____________________________________

PAYTBL              GRADE                 PAYTBL             GRADE

  ___   __ __ __ __ __ __ __ __ __ __      ___   __ __ __ __ __ __ __ __ __ __
  ___   __ __ __ __ __ __ __ __ __ __      ___   __ __ __ __ __ __ __ __ __ __
  ___   __ __ __ __ __ __ __ __ __ __      ___   __ __ __ __ __ __ __ __ __ __
  ___   __ __ __ __ __ __ __ __ __ __      ___   __ __ __ __ __ __ __ __ __ __
  ___   __ __ __ __ __ __ __ __ __ __      ___   __ __ __ __ __ __ __ __ __ __


PRINT MEMO IN LIEU OF SF50: _          PERFORM UPDATES IN BATCH:  _ (Y/N)

--------------------------------------------------------------------------------
 PF1= HELP                  PF5= MAIN MENU                    PF12= END
```

Annual Comparability Increase (ACI)

DESCRIPTION AND EXECUTION

The Annual Comparability Increase (ACI) template is used to apply an ACI to the suspense file for a regular employee (i.e., all employees who are not on Retained Grade, Retained Pay, or Re-employed Annuitant). You identify all new base salary amounts for all Pay Table, Grade, and Step combinations. No unmatured actions that modify salary may be suspended before the execution of ACI due to salary tables not being updated at the time the actions are created.

<u>Steps to Reach ACI Template</u>

1. At the Main Menu, select **1** - Personnel.
2. At the Personnel Main Menu, select **6** - ACI.
3. At the ACI Menu, select **1** - ACI.

USER INPUT

The following procedure is recommended for the processing of ACI.

1. Verify that no actions causing EMPL-ADJSTD-BASIC-PAY to be recomputed (i.e., 702, 893, 895) are on the suspense file.
2. Verify that the applicable tables (i.e., Salary (TSALSTEP) and Authority Code (TAUTH)) were loaded as part of the Leave Year-End release.
3. Enter the Authorizations, Effective Date, Pay Tables Codes, and Grades.
4. (Optional) Enter **Y** in the Print Memo In Lieu of SF 50 field in order to select memos instead of SF 50s. As a result of this selection, a batch job will automatically be scheduled and placed in a Hold status to print memos.
5. Run ACI online by pressing **ENTER** after you have typed in the required information.
6. Run ACI in batch by entering **Y** in Perform Updates in Batch field.
7. Mature ACI via the online or batch mature capability.
8. SF 50s can be printed before or after the mature using the SF 50 Print Selection (SEL50) capability for those actions which did not have a memo printed.

DESCRIPTION OF DATA PROCESSING AND OUTPUT

The ACI procedure can only be used for employees with the Pay Rate Determinant 0, 5, 6, 7, and M. These employees must also have an assigned pay table (not blank). Finally, the Duty Status of employees to receive ACI must not be "Z" or blank. Other types of employees are done individually online, i.e., Retained Grade, Retained Pay, or Re-employed Annuitant (Annuitant Indicator which is 1, 4, 5, A, C, or E).

ACI actions are not edited until the mature process is executed. Actions which are in error will not mature. When this happens, NPPS provides messages on the Transaction Summary screen or on the Mature Transaction and Error Report (Core Report 358), which state specific actions that are in error and consequently were not matured.

ACI actions which do not mature because of errors remain on the suspense file. In order to correct the actions, a change function must be performed from the PERACT menu to correct the data before the mature is attempted again.

INTERRELATIONSHIPS

You may wish to check your Personnel Master file for erroneous data using SUPER NATURAL to ensure employees are on correct pay table and pay rate determinant before you run ACI.

4.1.5.5 GM ACI

```
COMMAND: ________                    NPPS
NEM8100         GM ANNUAL COMPARABILITY INCREASE - GMACI (894)
-------------------------------------------------------------------------------

                    EFDATE:  __ __ __          PAYTBL:  ___


                AUTH1:  ___  ___________________________________
                AUTH2:  ___  ___________________________________

            GRADE        OLD BASIC MIN        OLD BASIC MAX
              __           ___________          ___________
              __           ___________          ___________
              __           ___________          ___________


   PRINT MEMO IN LIEU OF SF50:  _         PERFORM UPDATES IN BATCH:  _ (Y/N)

-------------------------------------------------------------------------------
 PF1= HELP                      PF5= MAIN MENU                      PF12= END
_
```

GM Annual Comparability Increase (GMACI)

DESCRIPTION AND EXECUTION

The GM Annual Comparability Increase (GMACI) template is used to apply an ACI to the suspense file for a GM employee. No unmatured actions that modify salary may be suspended before the execution of GM ACI due to salary tables not being updated at the time the actions are created.

<u>Steps to Reach GM ACI</u>

1. At the Main Menu, select **1** - Personnel.
2. At the Personnel Main Menu, select **6** - ACI.
3. At the ACI Menu, select **2** - GM ACI.

USER INPUT

The following procedure is recommended for the processing of GM ACI.

1. Verify that no actions causing EMPL-ADJSTD-BASIC-PAY to be recomputed (i.e., 702, 891, 893, 895) are on the suspense file.
2. Verify that the applicable tables (i.e., Salary (TSALSTEP) and Authority Code (TAUTH)) were loaded as part of the Leave Year-End Process.
3. Enter the Authorizations, Effective Date, Pay Tables Codes, and Grades, Old Basic Minimum and Old Basic Maximum values for appropriate pay tables and grades.

4. (Optional) Enter **Y** in the Print Memo In Lieu of SF 50 field in order to select memos instead of SF 50s. As a result of this selection, a batch job will automatically be scheduled and placed in a Hold status to print memos.
5. Run GM ACI online by pressing **ENTER** after you have typed in the required information.
6. Run GM ACI in batch by entering **Y** in Perform Updates in Batch field.
7. Mature GM ACI via the online or batch mature capability.
8. SF 50s can be printed before or after the mature using the SF 50 Print Selection (SEL50) capability for those actions which did not have a memo printed.

DESCRIPTION OF DATA PROCESSING AND OUTPUT

The GM ACI procedure can only be used for employees with the Pay Rate Determinant 0, 5, 6, 7, and M. These employees must also have an assigned pay table (not blank). Finally, the Duty Status of employees to receive GM ACI must not be "Z" or blank. Other types of employees are done individually online; i.e., Retained Grade, Retained Pay, or Re-employed Annuitant (Annuitant Indicator which is 1, 4, 5, A, C, or E).

GM ACI actions are not edited until the mature process is executed. Actions which are in error will not mature. When this happens, NPPS provides messages on the Transaction Summary screen or on the Mature Transaction Error Report (Core Report 358), which state specific actions that are in error and consequently were not matured.

GM ACI actions which do not mature because of errors remain on the suspense file. In order to correct the actions, a change function must be performed from the PERACT menu to correct the data before the mature is attempted again.

4.1.6 Mass Actions Menu

```
COMMAND: ________                    NPPS
NEO9000                   MASS ACTIONS MENU - MASACT
-------------------------------------------------------------------------------


                   ENTER ONE OF THE FOLLOWING SELECTIONS: __


     1 - MASS TRANSFER                      10 - CHANGE ORGANIZATION NAME
     2 - FURLOUGH NOT-TO-EXCEED             11 - CHANGE IN NASA CLASS CODE
     3 - FURLOUGH                           12 - CHANGE IN FEHB
     4 - MILITARY FURLOUGH                  13 - TSP CHANGE
     5 - EXTENSION OF FURLOUGH              14 - LOCALITY PAYMENT
     6 - REALIGNMENT                        15 - CHANGE IN APPROPRIATION
     7 - MASS AWARD                         16 - MASS MISCELLANEOUS
     8 - CHG IN DUTY STATION                17 - MASS RETURN TO DUTY
     9 - PERFORMANCE RATING


-------------------------------------------------------------------------------
 PF1= HELP                        PF5= MAIN                        PF12= END
```

Mass Actions Menu (MASACT)

DESCRIPTION AND EXECUTION

The Mass Actions Menu (MASACT) is used to generate suspended personnel transactions for a group of employees you define for Mass Transfers (NOAC 352), Furloughs (NOACs 471, 472, 473, and 772), Realignment (NOAC 790), Awards, Performance Rating (NOAC 990), NCC (NOAC 920), Change in Organization Name (NOAC 925), Change in FEHB (NOAC 942), TSP Change (NOAC 943), Change in Duty Station (NOAC 792), Change in Locality Payment (NOAC 895), Change in Appropriation (NOAC 954), and Mass Miscellaneous (NOAC 991), and Return to Duty (NOAC 292) as illustrated in Figure 4.1.8-1.

<u>Steps to Reach Mass Actions Menu</u>

1. At the Main Menu, select **1** - Personnel.
2. At the Personnel Main Menu, select **7** - Mass Actions.

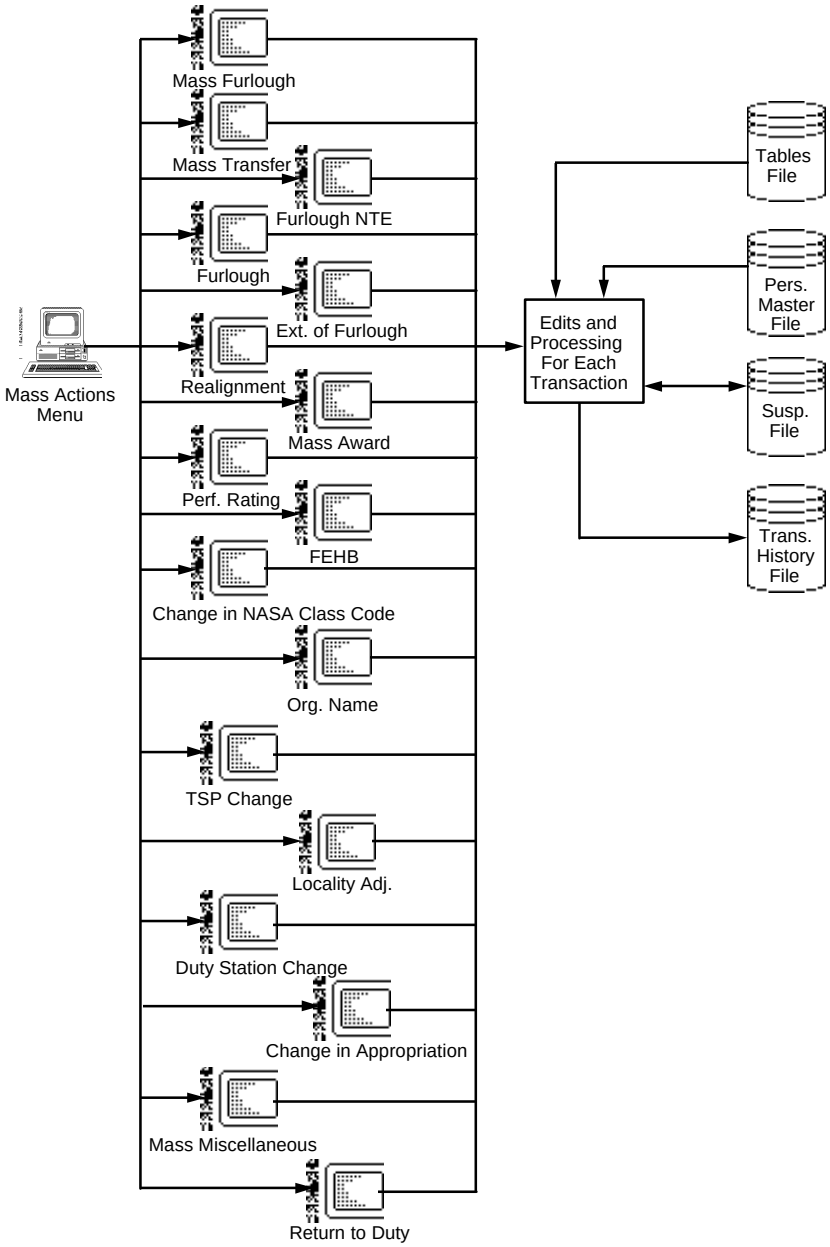

Figure 4.1.71 Mass Actions

DESCRIPTION OF DATA PROCESSING AND OUTPUT

Mass actions are not edited until the Mature process is executed. Actions which are in error will not mature. When this happens, NPPS provides messages on the Transaction Summary screen which state specific actions are in error and consequently were not matured.

Mass actions which do not mature because of errors remain on the suspense file. In order to correct the actions, remove them from the suspense file using the Mass Deletion of Suspended Actions capability. This capability is option number 4 on the Personnel Actions Main Menu (PERMAIN). Then correct the errors and re-enter the affected actions.

The alternative to deleting the actions which are in error is retrieving each action individually and correcting it online.

Whenever a mass action is added to the suspense file with an effective date earlier than pre-existing suspended SF 50 actions for an employee, the pre-existing SF 50 actions will be set to error status. The identification of the pre-existing SF 50 actions will be displayed after the mass transaction is processed.

4.1.6.1 Mass Transfer

```
COMMAND: ________                    NPPS
NEM9010              MASS TRANSFER - MTRANSFR (NOAC 352)
--------------------------------------------------------------------------------
 EFDATE: __ __ __     DEPART DEST: _       DEPART REASON: _   TRANS TO: ____
 AUTH1: ___                                AUTH2: ___
 ____________________                       ________________________
 ___________________________________        ____________________________________
SF 50 REMARKS:             SF 50 SIGNATURE: 1
 ___  ____________________________________________________________________
 ___  ____________________________________________________________________
 ___  ____________________________________________________________________
 ___  ____________________________________________________________________
 SSNS:
 ___ __ ____     ___ __ ____     ___ __ ____     ___ __ ____     ___ __ ____
 ___ __ ____     ___ __ ____     ___ __ ____     ___ __ ____     ___ __ ____
 ___ __ ____     ___ __ ____     ___ __ ____     ___ __ ____     ___ __ ____
 ___ __ ____     ___ __ ____     ___ __ ____     ___ __ ____     ___ __ ____
 ___ __ ____     ___ __ ____     ___ __ ____     ___ __ ____     ___ __ ____
 ___ __ ____     ___ __ ____     ___ __ ____     ___ __ ____     ___ __ ____
--------------------------------------------------------------------------------
 PF1= HELP                      PF5= MAIN MENU                     PF12= END
```

Mass Transfer (MTRANSFR)

DESCRIPTION AND EXECUTION

The Mass Transfer (MTRANSFR) template is used to generate a suspended Transfer (NOAC 352) for each employee you specify.

<u>Steps to Reach Mass Transfer</u>

1. At the Main Menu, select **1** - Personnel.
2. At the Personnel Main Menu, select **7** - Mass Actions.
3. At the Mass Actions Menu, select **1** - Mass Transfer.

DESCRIPTION OF DATA PROCESSING RESULTS AND OUTPUT

NPPS sets the Separation Date of each employee to the Effective Date of the action and the Duty Status of each employee to a terminated status (Duty Status = "Z"). NPPS also identifies the source of each generated transaction as being from the Mass Transfer process.

4.1.6.2 Furlough Not-to-Exceed

```
COMMAND: ________                    NPPS
NEO9020             MASS FURLOUGH NTE - MFURNTE (NOAC 472)
-------------------------------------------------------------------------------
 EFDATE: __ __ __          DTYSTS: _       FURLOUGH NTE: __ __ __
 AUTH1: ___                                AUTH2: ___
  ________________________                  ________________________
  ___________________________________       ____________________________________
 PRINT MEMO: _ (N,Y)
 REMARKS:                  SF 50 SIGNATURE: 1
  ___  ____________________________________________________
  ___  ____________________________________________________
 ORGANIZATION: ASSIGNED (RANGE) FROM: _____ TO: _____
 SSNS:
  ___ __ ____     ___ __ ____     ___ __ ____     ___ __ ____     ___ __ ____
  ___ __ ____     ___ __ ____     ___ __ ____     ___ __ ____     ___ __ ____
  ___ __ ____     ___ __ ____     ___ __ ____     ___ __ ____     ___ __ ____
  ___ __ ____     ___ __ ____     ___ __ ____     ___ __ ____     ___ __ ____
-------------------------------------------------------------------------------
 PF1= HELP                      PF5= MAIN MENU                      PF12= END
```

Mass Furlough Not-to-Exceed (MFURNTE)

DESCRIPTION AND EXECUTION

The Mass Furlough NTE (MFURNTE) template is used to generate a suspended Furlough NTE (NOAC 472) action and to change the Furlough NTE date for each employee selected based on user input (i.e., all employees whose Duty Status is equal to D, F, X, or Y and Work Schedule code is equal to P, F, S, or T and whose Organization: Assigned matches or is within the range of the organizations "From and To" or SSNs specified). If no organizations or SSNs are specified, all employees who meet the criteria above will be selected. The Duty Status will be set equal to the Duty Status found in the employee's record if no Duty Status is input.

<u>Steps to Reach Mass Furlough Not-to-Exceed</u>

1. At the Main Menu, select **1** - Personnel.
2. At the Personnel Main Menu, select **7** - Mass Actions.
3. At the Mass Actions Menu, select **2** - Furlough Not-to-Exceed.

DESCRIPTION OF DATA PROCESSING RESULTS AND OUTPUT

NPPS sets the source code to "F" for each generated transaction as being from the Furlough NTE (NOAC 472) action process. The Furlough NTE capability (472) generates a Memo in Lieu of an SF 50 if specified or an SF 50 (default). The Personnel in Lieu of SF 50 batch job will be scheduled if the Print Memo flag is set to "Y" at the time the actions are created.

4.1.6.3 Furlough

```
COMMAND: ________                    NPPS
NEO9030                MASS FURLOUGH - MFURLO (NOAC 471)
--------------------------------------------------------------------------------
 EFDATE: __ __ __
 AUTH1: ___                                  AUTH2: ___
  ________________________                    ________________________
  ___________________________________         ____________________________________
 PRINT MEMO: _ (N,Y)
 REMARKS:                  SF 50 SIGNATURE: 1
  ___  ____________________________________________________________
  ___  ____________________________________________________________
 ORGANIZATION: ASSIGNED (RANGE) FROM: _____ TO: _____
 SSNS:
  ___ __ ____     ___ __ ____     ___ __ ____     ___ __ ____     ___ __ ____
  ___ __ ____     ___ __ ____     ___ __ ____     ___ __ ____     ___ __ ____
  ___ __ ____     ___ __ ____     ___ __ ____     ___ __ ____     ___ __ ____
  ___ __ ____     ___ __ ____     ___ __ ____     ___ __ ____     ___ __ ____
  ___ __ ____     ___ __ ____     ___ __ ____     ___ __ ____     ___ __ ____
  ___ __ ____     ___ __ ____     ___ __ ____     ___ __ ____     ___ __ ____
--------------------------------------------------------------------------------
 PF1= HELP                      PF5= MAIN MENU                     PF12= END
```

Mass Furlough (MFURLO)

DESCRIPTION AND EXECUTION

The Mass Furlough (MFURLO) template is used to generate a suspended Furlough (NOAC 471) for each employee selected based on user input (i.e., all employees whose Duty Status equals D, X, or Y and whose work schedule equals F, P, S, or T and whose Organization: Assigned matches or is within the range of the organizations "From and To" or SSNs specified). If no organizations or SSNs are specified, all employees who meet the criteria above will be selected.

<u>Steps to Reach Mass Furlough</u>

1. At the Main Menu, select **1** - Personnel.
2. At the Personnel Main Menu, select **7** - Mass Actions.
3. At the Mass Actions Menu, select **3** - Furlough.

DESCRIPTION OF DATA PROCESSING RESULTS AND OUTPUT

NPPS sets the source code to “F” for each generated transaction as being from the Furlough mass action process. The Mass Furlough capability (NOAC 471) generates a Memo in Lieu of a SF 50 if specified or a SF 50 (default). The Personnel in Lieu of SF 50 batch job will be scheduled if the Print Memo flag is set to "Y" at the time the actions are created.

4.1.6.4 Military Furlough

```
COMMAND: ________                    NPPS
NEO9040            MASS FURLOUGH MIL - MFURLMIL (NOAC 473)
--------------------------------------------------------------------------------

 EFDATE: __ __ __                          DTYSTS: _
 AUTH1: ___                                AUTH2: ___
 ________________________                   ________________________
 ________________________________           ________________________________________
SF 50 REMARKS:             SF 50 SIGNATURE: 1
 M72  ____________________________________________________________________________
 ___  ____________________________________________________________________________
 ___  ____________________________________________________________________________
 ___  ____________________________________________________________________________
 SSNS:
 ___ __ ____     ___ __ ____     ___ __ ____     ___ __ ____     ___ __ ____
 ___ __ ____     ___ __ ____     ___ __ ____     ___ __ ____     ___ __ ____
 ___ __ ____     ___ __ ____     ___ __ ____     ___ __ ____     ___ __ ____
 ___ __ ____     ___ __ ____     ___ __ ____     ___ __ ____     ___ __ ____
 ___ __ ____     ___ __ ____     ___ __ ____     ___ __ ____     ___ __ ____
 ___ __ ____     ___ __ ____     ___ __ ____     ___ __ ____     ___ __ ____

--------------------------------------------------------------------------------
 PF1= HELP                      PF5= MAIN MENU                      PF12= END
```

Mass Military Furlough (MFURLMIL)

DESCRIPTION AND EXECUTION

The Mass Military Furlough (MFURLMIL) template is used to change the effective date of duty status for up to 30 SSNs at one time and generate a suspended Furlough Military (NOAC 473) for each employee you specify.

<u>Steps to Reach Mass Military Furlough</u>

1. At the Main Menu, select **1** - Personnel.
2. At the Personnel Main Menu, select **7** - Mass Actions.
3. At the Mass Actions Menu, select **4** - Military Furlough.

DESCRIPTION OF DATA PROCESSING RESULTS AND OUTPUT

NPPS sets the source of each generated transaction as being from the Military Furlough mass action process.

4.1.6.5 Extension of Furlough

```
COMMAND: ________                    NPPS
NEO9050          MASS EXT FURLOUGH NTE - FEFURNTE (NOAC 772)
-------------------------------------------------------------------------------
 EFDATE: __ __ __          DTYSTS: _       FURLOUGH NTE: __ __ __
 AUTH1: ___                                AUTH2: ___
  ________________________                  ________________________
  ___________________________________       ____________________________________
 PRINT MEMO: _ (N,Y)
 REMARKS:                  SF 50 SIGNATURE: 1
  ___  ____________________________________________________
  ___  ____________________________________________________
 ORGANIZATION: ASSIGNED (RANGE) FROM: _____ TO: _____
 SSNS:
  ___ __ ____     ___ __ ____     ___ __ ____     ___ __ ____     ___ __ ____
  ___ __ ____     ___ __ ____     ___ __ ____     ___ __ ____     ___ __ ____
  ___ __ ____     ___ __ ____     ___ __ ____     ___ __ ____     ___ __ ____
  ___ __ ____     ___ __ ____     ___ __ ____     ___ __ ____     ___ __ ____
-------------------------------------------------------------------------------
 PF1= HELP                      PF5= MAIN MENU                      PF12= END
```

Mass Extension of Furlough NTE (MEFURNTE)

DESCRIPTION AND EXECUTION

The Mass Extension of Furlough NTE (MEFURNTE) template is used to generate a suspended Extension of Furlough NTE (NOAC 772) action and to change the Furlough NTE date for each employee selected based on user input (i.e., all employees whose Duty Status equal to D, F, X, or Y and Work Schedule Code is equal to P, F, S, or T and whose Organization: Assigned matches or is within the range of the organizations "From and To" or SSNs specified). If no organizations or SSNs are specified, all employees who meet the criteria above will be selected. The Duty Status will be set equal to the Duty Status found in the employee's record if no Duty Status is input.

<u>Steps to Reach Mass Extension of Furlough</u>

1. At the Main Menu, select **1** - Personnel.
2. At the Personnel Main Menu, select **7** - Mass Actions.
3. At the Mass Actions Menu, select **5** - Extension of Furlough.

DESCRIPTION OF DATA PROCESSING RESULTS AND OUTPUT

NPPS sets the source code to "F" for each generated transaction as being from the Extension of Furlough (NOAC 772) action process. The Extension of Furlough capability (772) generates a Memo in Lieu of an SF 50 if specified or an SF 50 (default). The Personnel in Lieu of SF 50 batch job will be scheduled if the Print Memo flag is set to "Y" at the time the actions are created.

4.1.6.6 Realignment

```
COMMAND: ________                    NPPS
NEO9060            MASS REALIGNMENT - MREALIGN (NOAC 790)
--------------------------------------------------------------------------------
 EFDATE: __ __ __       ORGANIZATION FROM: _____        ORGANIZATION TO: _ ____
 DUTY STATION: _________ ORG LOCATED FROM: _____         ORG LOCATED TO: _ ____
                              AGENCY CODE: ____         FACILITY: _
 AUTH1: ___                                AUTH2: ___
 ________________________                   ________________________
 ________________________________           ____________________________________
 SF 50 REMARKS:       SF 50 SIGNATURE:  1             PRINT MEMO:  _ (N,Y)
 ___  ____________________________________________________________________________
 ___  ____________________________________________________________________________
 SSNS:
 ___ __ ____     ___ __ ____      ___ __ ____     ___ __ ____      ___ __ ____
 ___ __ ____     ___ __ ____      ___ __ ____     ___ __ ____      ___ __ ____
 ___ __ ____     ___ __ ____      ___ __ ____     ___ __ ____      ___ __ ____
 ___ __ ____     ___ __ ____      ___ __ ____     ___ __ ____      ___ __ ____
--------------------------------------------------------------------------------
 PF1= HELP                      PF5= MAIN MENU                      PF12= END
```

Mass Realignment (MREALIGN)

DESCRIPTION AND EXECUTION

The Mass Realignment (MREALIGN) template is used to generate a suspended Realignment (NOAC 790) for each employee you specify who meets the selection criteria (i.e., the employee must currently be assigned to the Organization Assigned that you specify and located in the Organization Located that you specify). If no SSNs are specified, all employees whose Facility Code matches the Facility Code entered, whose Organization: Assigned matches Assigned From, and whose Organization: Located matches Located From will have an action generated. If Facility Code is left blank, all employees who match the user specified criteria will have an action generated. Optionally, the user may enter a period in the Org Located To field to blank out the Organization: Located for employees who match the user specified criteria.

<u>Steps to Reach Mass Realignment</u>

1. At the Main Menu, select **1** - Personnel.
2. At the Personnel Main Menu, select **7** - Mass Actions.
3. At the Mass Actions Menu, select **6** - Realignment.

DESCRIPTION OF DATA PROCESSING RESULTS AND OUTPUT

NPPS sets the source of each generated transaction as being from the Realignment mass process. The Mass Realignment capability (790) generates a Memo in Lieu of an SF 50 if specified or an SF 50 (default). The Personnel in Lieu of SF 50 batch job will be scheduled if the Print Memo flag is set to "Y" at the time the actions are created.

4.1.6.7 Mass Award

```
COMMAND: ________                    NPPS
NEO9070                       MASS AWARD - MAWARD
-------------------------------------------------------------------------------
 NOAC: _____     EFDATE: __ __ __
 AWDYR: __       AWDTYP: _            AWDCHK: _    BENEFIT AMOUNT: ___________
 GROUP: ____     GROUP TEXT: ________________________________
 AUTH1: ___                                  AUTH2: ___
 ________________________                     ________________________
 ________________________________             ____________________________________
 SF 50 REMARKS:             SF 50 SIGNATURE: _        AWARD BUDGET: ________
 ___  ____________________________________________________________________________
 ___  ____________________________________________________________________________
    SSN        AWDAMT          SSN        AWDAMT          SSN        AWDAMT
 ___ __ ____  ________      ___ __ ____  ________      ___ __ ____  ________
 ___ __ ____  ________      ___ __ ____  ________      ___ __ ____  ________
 ___ __ ____  ________      ___ __ ____  ________      ___ __ ____  ________
 ___ __ ____  ________      ___ __ ____  ________      ___ __ ____  ________
 ___ __ ____  ________      ___ __ ____  ________      ___ __ ____  ________
 ___ __ ____  ________      ___ __ ____  ________      ___ __ ____  ________
-------------------------------------------------------------------------------
 PF1= HELP                        PF5= MAIN                        PF12= END
```

Mass Award (MAWARD)

DESCRIPTION AND EXECUTION

The Mass Award (MAWARD) template is used to generate a suspended award action for each employee you specify who also meets the selection criteria.

<u>Steps to Reach Mass Award</u>

1. At the Main Menu, select **1** - Personnel.
2. At the Personnel Main Menu, select **7** - Mass Actions.
3. At the Mass Actions Menu, select **7** - Mass Award.

DESCRIPTION OF DATA PROCESSING RESULTS AND OUTPUT

NPPS checks that the NOAC entered is an award action and identifies the source of each generated transaction as being from the Award mass process. Time Off awards cannot be processed through mass actions. On the Spot awards may be processed through mass actions, but the gross amount must be entered.

4.1.6.8 Change in Duty Station

```
COMMAND: ________                    NPPS
NEO9140        MASS CHANGE IN DUTY STATION - MDTYSTN (NOAC 792)
--------------------------------------------------------------------------------
 EFDATE:  __ __ __    DUTY STATION FROM:  _________    ORG ASSIGNED:  _____
                      DUTY STATION TO:  _________
 AUTH1:  ___                            AUTH2:  ___
 _________________________              _________________________
 ___________________________________    ___________________________________
 SF 50 REMARKS:         SF 50 SIGNATURE:  _            PRINT MEMO:  _  (N,Y)
 ___  ____________________________________________________________________
 ___  ____________________________________________________________________
 ___  ____________________________________________________________________
 SSNS:
 ___ __ ____     ___ __ ____     ___ __ ____     ___ __ ____     ___ __ ____
 ___ __ ____     ___ __ ____     ___ __ ____     ___ __ ____     ___ __ ____
 ___ __ ____     ___ __ ____     ___ __ ____     ___ __ ____     ___ __ ____
 ___ __ ____     ___ __ ____     ___ __ ____     ___ __ ____     ___ __ ____
 ___ __ ____     ___ __ ____     ___ __ ____     ___ __ ____     ___ __ ____
 ___ __ ____     ___ __ ____     ___ __ ____     ___ __ ____     ___ __ ____
--------------------------------------------------------------------------------
 PF1= HELP                    PF5= MAIN MENU                        PF12= END
```

Mass Change in Duty Station (MDTYSTN)

DESCRIPTION AND EXECUTION

The Mass Change in Duty Station (MDTYSTN) template is used to generate a suspended Change in Duty Station (NOAC 792) for each employee you specify. If no SSNs are specified, all employees whose Duty Station From or Organization: Assigned (select by any level of organization) matches the user specified criteria will have an action generated. If no Organization or Duty Station or SSNs are specified, all employees will be selected.

<u>Steps to Reach Mass Change in Duty Station</u>

1. At the Main Menu, select **1** - Personnel.
2. At the Personnel Main Menu, select **7** - Mass Actions.
3. At the Mass Actions Menu, select **8** - Change in Duty Station.

DESCRIPTION OF DATA PROCESSING RESULTS AND OUTPUT

NPPS sets the source of each generated transaction as being from the Change in Duty Station mass action process.

4.1.6.9 Performance Rating

```
COMMAND: ________                    NPPS
NEO9090         MASS PERFORMANCE RATING - MPEFRAT (NOAC 990)
--------------------------------------------------------------------------------

                     EFDATE: __ __ __      YEAR: __   PATTERN: _

                  CURR                        CURR                      CURR
     SSN         RATING            SSN       RATING        SSN         RATING
 -----------     ------        -----------   ------    -----------     ------
 ___ __ ____       _           ___ __ ____     _       ___ __ ____       _
 ___ __ ____       _           ___ __ ____     _       ___ __ ____       _
 ___ __ ____       _           ___ __ ____     _       ___ __ ____       _
 ___ __ ____       _           ___ __ ____     _       ___ __ ____       _
 ___ __ ____       _           ___ __ ____     _       ___ __ ____       _
 ___ __ ____       _           ___ __ ____     _       ___ __ ____       _
 ___ __ ____       _           ___ __ ____     _       ___ __ ____       _
 ___ __ ____       _           ___ __ ____     _       ___ __ ____       _
 ___ __ ____       _           ___ __ ____     _       ___ __ ____       _
 ___ __ ____       _           ___ __ ____     _       ___ __ ____       _

--------------------------------------------------------------------------------
 PF1= HELP                  PF5= MAIN MENU                        PF12= END
```

Mass Performance Rating (MPEFRAT)

DESCRIPTION AND EXECUTION

The Mass Performance Rating (MPEFRAT) template is used to generate a suspended Performance Rating (NOAC 990) for each employee you specify who also meets the selection criteria. You may also input the performance rating and year received. NPPS automatically maintains performance rating and year received for three prior periods.

<u>Steps to Reach Mass Performance Rating</u>

1. At the Main Menu, select **1** - Personnel.
2. At the Personnel Main Menu, select **7** - Mass Actions.
3. At the Mass Actions Menu, select **9** - Performance Rating.

DESCRIPTION OF DATA PROCESSING RESULTS AND OUTPUT

NPPS identifies the source of each generated transaction as being from the Performance Rating mass process.

4.1.6.10 Change Organization Name

```
COMMAND: ________                    NPPS
NEO9100          MASS CHG IN ORGA NAME - MORGNAME (NOAC 925)
      ---------------------------------------------------------------------------
 EFDATE: __ __ __         ORG ASSIGNED: _____


 AUTH1: ___      _________________________
                 ___________________________________

 SF 50 SIGNATURE: 1              PRINT MEMO: _ (N,Y)

 SSNS:
 ___ __ ____     ___ __ ____     ___ __ ____     ___ __ ____     ___ __ ____
 ___ __ ____     ___ __ ____     ___ __ ____     ___ __ ____     ___ __ ____
 ___ __ ____     ___ __ ____     ___ __ ____     ___ __ ____     ___ __ ____
 ___ __ ____     ___ __ ____     ___ __ ____     ___ __ ____     ___ __ ____
 ___ __ ____     ___ __ ____     ___ __ ____     ___ __ ____     ___ __ ____
 ___ __ ____     ___ __ ____     ___ __ ____     ___ __ ____     ___ __ ____


---------------------------------------------------------------------------------
 PF1= HELP                 PF5= MAIN MENU                    PF12= END
```

Mass Change in Organization Name (MORGNAME)

DESCRIPTION AND EXECUTION

The Mass Change in Organization Name (MORGNAME) template is used to generate a suspended Change in Organization Name (NOAC 925) for each employee who meets the selection criteria (i.e., each employee who is currently assigned to the Organization Assigned Code for which the name is being changed). If no SSNs are specified, all employees whose Organization: Assigned matches Organization From will have an action generated. The new organization titles are retrieved from the TORG table based on the employee's Organization:Assigned. The TORG table should be updated with the new organization titles before a mass change in organization name is processed.

<u>Steps to Reach Change in Organization Name</u>

1. At the Main Menu, select **1** - Personnel.
2. At the Personnel Main Menu, select **7** - Mass Actions.
3. At the Mass Actions Menu, select **10** - Change Organization Name.

DESCRIPTION OF DATA PROCESSING RESULTS AND OUTPUT

NPPS identifies the source of each generated transaction as being from the Change Organization Name mass process. In addition, NPPS produces the NPPS Core report, Approved Action not Requiring an SF 50, for each employee personnel action generated.

4.1.6.11 Change in NASA Class Code

```
COMMAND: ________                    NPPS
NEO9110                MASS CHG IN NCC - MNCC (NOAC 920)
-------------------------------------------------------------------------------
 EFDATE: __ __ __                 NCC FROM: _____                NCC TO: _____
NASA TITLE TO: ____________________________________________________________
AUTH1: ___                                  AUTH2: ___
 ______________________                      ______________________
 ________________________________            ____________________________________
SF 50 REMARKS:             SF 50 SIGNATURE: 1
 ___  ____________________________________________________________________
 ___  ____________________________________________________________________
 ___  ____________________________________________________________________
 ___  ____________________________________________________________________
SSNS:
 ___ __ ____     ___ __ ____     ___ __ ____     ___ __ ____     ___ __ ____
 ___ __ ____     ___ __ ____     ___ __ ____     ___ __ ____     ___ __ ____
 ___ __ ____     ___ __ ____     ___ __ ____     ___ __ ____     ___ __ ____
 ___ __ ____     ___ __ ____     ___ __ ____     ___ __ ____     ___ __ ____
 ___ __ ____     ___ __ ____     ___ __ ____     ___ __ ____     ___ __ ____
-------------------------------------------------------------------------------
 PF1= HELP                     PF5= MAIN MENU                      PF12= END
```

Mass Change in NASA Class Code (MNCC)

DESCRIPTION AND EXECUTION

The Mass Change in NASA Class Code (MNCC) template is used to generate a suspended Change in NCC (NOAC 920) for each employee you specify who meets the selection criteria (i.e., employees who are currently assigned to the NCC that is being changed). If no SSNs are specified, all employees whose NASA Classification Code matches NCC From will have an action generated.

<u>Steps to Reach Mass Change in NASA Class Code</u>

1. At the Main Menu, select **1** - Personnel.
2. At the Personnel Main Menu, select **7** - Mass Actions.
3. At the Mass Actions Menu, select **11** - Change in NASA Class Code.

DESCRIPTION OF DATA PROCESSING RESULTS AND OUTPUT

NPPS will identify the source of each generated transaction as being from the Change in NCC mass process.

4.1.6.12 Change in FEHB

```
COMMAND: ________                    NPPS
NEO9120               MASS CHG IN FEHB - MFEHB (NOAC 942)
--------------------------------------------------------------------------------

                              EFDATE: __ __ __

                 FEHB                        FEHB                        FEHB
     SSN         PLAN            SSN         PLAN          SSN           PLAN
------------     -----       ------------    -----    ------------      -----
 ___ __ ____      ___         ___ __ ____     ___      ___ __ ____       ___
 ___ __ ____      ___         ___ __ ____     ___      ___ __ ____       ___
 ___ __ ____      ___         ___ __ ____     ___      ___ __ ____       ___
 ___ __ ____      ___         ___ __ ____     ___      ___ __ ____       ___
 ___ __ ____      ___         ___ __ ____     ___      ___ __ ____       ___
 ___ __ ____      ___         ___ __ ____     ___      ___ __ ____       ___
 ___ __ ____      ___         ___ __ ____     ___      ___ __ ____       ___
 ___ __ ____      ___         ___ __ ____     ___      ___ __ ____       ___
 ___ __ ____      ___         ___ __ ____     ___      ___ __ ____       ___
 ___ __ ____      ___         ___ __ ____     ___      ___ __ ____       ___


--------------------------------------------------------------------------------
 PF1= HELP                  PF5= MAIN MENU                        PF12= END
```

Mass Change in FEHB (MFEHB)

DESCRIPTION AND EXECUTION

The Mass Change in FEHB (MFEHB) template is used to generate a suspended Change in FEHB (NOAC 942) for each employee you specify who meets the selection criteria.

<u>Steps to Reach Mass Change in FEHB</u>

1. At the Main Menu, select **1** - Personnel.
2. At the Personnel Main Menu, select **7** - Mass Actions.
3. At the Mass Actions Menu, select **12** - Change in FEHB.

DESCRIPTION OF DATA PROCESSING RESULTS AND OUTPUT

NPPS will identify the source of each generated transaction as being from the Change in FEHB mass process.

4.1.6.13 TSP Change

```
COMMAND: ________                    NPPS
NEO9130               MASS TSP CHANGE - MTSP (NOAC 943)
--------------------------------------------------------------------------------
                              EFDATE: __ __ __

 SSN:

 ___ __ ____    ___ __ ____    ___ __ ____    ___ __ ____    ___ __ ____
 ___ __ ____    ___ __ ____    ___ __ ____    ___ __ ____    ___ __ ____
 ___ __ ____    ___ __ ____    ___ __ ____    ___ __ ____    ___ __ ____
 ___ __ ____    ___ __ ____    ___ __ ____    ___ __ ____    ___ __ ____
 ___ __ ____    ___ __ ____    ___ __ ____    ___ __ ____    ___ __ ____
 ___ __ ____    ___ __ ____    ___ __ ____    ___ __ ____    ___ __ ____
 ___ __ ____    ___ __ ____    ___ __ ____    ___ __ ____    ___ __ ____
 ___ __ ____    ___ __ ____    ___ __ ____    ___ __ ____    ___ __ ____
 ___ __ ____    ___ __ ____    ___ __ ____    ___ __ ____    ___ __ ____
 ___ __ ____    ___ __ ____    ___ __ ____    ___ __ ____    ___ __ ____

--------------------------------------------------------------------------------
 PF1= HELP                  PF5= MAIN MENU                        PF12= END
```

Mass TSP Change (MTSP)

DESCRIPTION AND EXECUTION

The Mass TSP Change (MTSP) template is used to generate a suspended TSP Change (NOAC 943) for each employee you specify. It changes TSP status code to "Y," TSP status date to effective date, and TSP eligibility date to null.

<u>Steps to Reach Mass Military Furlough</u>

1. At the Main Menu, select **1** - Personnel.
2. At the Personnel Main Menu, select **7** - Mass Actions.
3. At the Mass Actions Menu, select **13** - TSP Change.

DESCRIPTION OF DATA PROCESSING RESULTS AND OUTPUT

NPPS will identify the source of each generated transaction as being from the TSP Change mass process.

4.1.6.14 Locality Payment

```
COMMAND: ________                    NPPS
NEO9080        MASS CHANGE IN LOCALITY ADJ - MLCLADJ (NOAC 895)
--------------------------------------------------------------------------------
 EFDATE: __ __ __

 DUTY STATION:  _________


 AUTH1:  ___                            AUTH2:  ___
 ________________________               ________________________
 ___________________________________    ___________________________________

 PRINT MEMO:  _ (Y/N)

 SF 50 REMARKS:         SF 50 SIGNATURE:  _

 ___  ____________________________________________________________________
 ___  ____________________________________________________________________
 ___  ____________________________________________________________________


--------------------------------------------------------------------------------
 PF1= HELP                    PF5= MAIN MENU                        PF12= END
```

Mass Locality Payment (MLCLADJ)

DESCRIPTION AND EXECUTION

The Mass Locality Payment (MLCLADJ) template is used to generate a suspended Locality Payment (NOAC 895) for each employee meeting the selection criteria (i.e., Duty Station).

<u>Steps to Reach Mass Locality Payment</u>

1. At the Main Menu, select **1** - Personnel.
2. At the Personnel Main Menu, select **7** - Mass Actions.
3. At the Mass Actions Menu, select **14** - Locality Payment.

DESCRIPTION OF DATA PROCESSING RESULTS AND OUTPUT

NPPS sets the source of each generated transaction as being from the Locality Payment mass process. The Mass Locality Payment generates a Memo in Lieu of an SF 50 if specified.

4.1.6.15 Change in Appropriation

```
COMMAND: ________                    NPPS
NEO9150          MASS CHANGE IN APPROP - MCHGAPP (NOAC 954)
--------------------------------------------------------------------------------
 EFDATE:  __ __ __         NEW PLI CODE:  __________

 AUTH1:  ___                            AUTH2:  ___
 ________________________               ________________________
 ________________________________       ____________________________________
 SF 50 REMARKS:       SF 50 SIGNATURE:  1
 ___  ____________________________________________________________________
 ___  ____________________________________________________________________
 ___  ____________________________________________________________________
 SSN:
 ___ __ ____     ___ __ ____     ___ __ ____     ___ __ ____     ___ __ ____
 ___ __ ____     ___ __ ____     ___ __ ____     ___ __ ____     ___ __ ____
 ___ __ ____     ___ __ ____     ___ __ ____     ___ __ ____     ___ __ ____
 ___ __ ____     ___ __ ____     ___ __ ____     ___ __ ____     ___ __ ____
 ___ __ ____     ___ __ ____     ___ __ ____     ___ __ ____     ___ __ ____
 ___ __ ____     ___ __ ____     ___ __ ____     ___ __ ____     ___ __ ____
--------------------------------------------------------------------------------
 PF1= HELP                    PF5= MAIN MENU                       PF12= END
```

Mass Change in Appropriation (MCHGAPP)

DESCRIPTION AND EXECUTION

The Mass Change in Appropriation (MCHGAPP) template is used to generate a suspended Change in Appropriation (NOAC 954) for each employee specified.

<u>Step to Reach Mass Change in Appropriation</u>

1. At the Main Menu, select **1** - Personnel.
2. At the Personnel Main Menu, select **7** - Mass Actions.
3. At the Mass Actions Menu, select **15** - Change in Appropriation.

DESCRIPTION OF DATA PROCESSING RESULTS AND OUTPUT

NPPS sets the source of each generated transaction as being from the Change in Appropriation mass process.

4.1.6.16 Mass Miscellaneous

```
COMMAND: ________                    NPPS
NEO9160            MASS MISCELLANEOUS - MMISC (NOAC 991)
--------------------------------------------------------------------------------
 EFDATE:  __ __ __             (Place an 'X' by the field to be changed)

    _ ADMIN LEVEL            _ FINSTM                  _ POSCRIT
    _ PROJ PROMO             _ RTD                     _ RTD GROUP
    _ SUPIND                 _ TITLE CODE              _ TRAINING DEV PGM

      SSN    NEW VALUE           SSN    NEW VALUE           SSN    NEW VALUE
  ___ __ ____  _____         ___ __ ____  _____         ___ __ ____  _____
  ___ __ ____  _____         ___ __ ____  _____         ___ __ ____  _____
  ___ __ ____  _____         ___ __ ____  _____         ___ __ ____  _____
  ___ __ ____  _____         ___ __ ____  _____         ___ __ ____  _____
  ___ __ ____  _____         ___ __ ____  _____         ___ __ ____  _____
  ___ __ ____  _____         ___ __ ____  _____         ___ __ ____  _____
  ___ __ ____  _____         ___ __ ____  _____         ___ __ ____  _____
  ___ __ ____  _____         ___ __ ____  _____         ___ __ ____  _____
  ___ __ ____  _____         ___ __ ____  _____         ___ __ ____  _____
--------------------------------------------------------------------------------
 PF1= HELP                   PF5= MAIN MENU                        PF12= END
```

Mass Miscellaneous (MMISC)

DESCRIPTION AND EXECUTION

The Mass Miscellaneous (MMISC) template is used to generate a suspended Miscellaneous (NOAC 991) for each employee specified. The data element to be changed is selected by marking the desired field with an X. Only one data element may be selected. The appropriate new value must be entered for each SSN specified.

<u>Step to Reach Mass Miscellaneous</u>

1. At the Main Menu, select **1** - Personnel.
2. At the Personnel Main Menu, select **7** - Mass Actions.
3. At the Mass Actions Menu, select **16** - Mass Miscellaneous.

DESCRIPTION OF DATA PROCESSING RESULTS AND OUTPUT

NPPS sets the source of each generated transaction as being from the Miscellaneous mass process.

4.1.6.17 Return to Duty

```
COMMAND: ________                    NPPS
NEO9170              MASS RETURN TO DUTY - MRTD (NOAC 292)
-------------------------------------------------------------------------------
 EFDATE: __ __ __          DTYSTS: _
 AUTH1: ___                                  AUTH2: ___
  ________________________                    ________________________
  ___________________________________         ____________________________________
 PRINT MEMO: _ (N,Y)
 REMARKS:                  SF 50 SIGNATURE: 1
  ___  ____________________________________________________________________________
  ___  ____________________________________________________________________________
 ORGANIZATION: ASSIGNED (RANGE) FROM: _____ TO: _____
 SSNS:
  ___ __ ____     ___ __ ____     ___ __ ____     ___ __ ____     ___ __ ____
  ___ __ ____     ___ __ ____     ___ __ ____     ___ __ ____     ___ __ ____
  ___ __ ____     ___ __ ____     ___ __ ____     ___ __ ____     ___ __ ____
  ___ __ ____     ___ __ ____     ___ __ ____     ___ __ ____     ___ __ ____
  ___ __ ____     ___ __ ____     ___ __ ____     ___ __ ____     ___ __ ____
  ___ __ ____     ___ __ ____     ___ __ ____     ___ __ ____     ___ __ ____
-------------------------------------------------------------------------------
 PF1= HELP                      PF5= MAIN MENU                     PF12= END
```

Mass Return To Duty (MRTD)

DESCRIPTION AND EXECUTION

The Mass Return to Duty (MRTD) template is used to generate a suspended Return to Duty (NOAC 292) for each employee selected based on user input (i.e., all employees whose Duty Status not equal to Z and whose Organization: Assigned matches or is within the range of the organizations "From and To" or SSNs specified). If no organizations or SSNs are specified, all employees who meet the criteria above will be selected. The Duty Status will be set equal to the Duty Status found in the employee's record if no Duty Status is input.

<u>Steps to Reach Mass Return to Duty</u>

1. At the Main Menu, select **1** - Personnel.
2. At the Personnel Main Menu, select **7** - Mass Actions.
3. At the Mass Actions Menu, select **17** - Mass Return to Duty.

DESCRIPTION OF DATA PROCESSING RESULTS AND OUTPUT

NPPS sets the source code to "R" for each generated transaction as being from the Return to Duty action process. The Return to Duty capability (292) generates a Memo in Lieu of an SF 50 if specified or an SF 50 (default). The Personnel in Lieu of SF 50 batch job will be scheduled if the Print Memo flag is set to "Y" at the time the actions are created.

4.1.6.18 Employee Service Record

```
COMMAND: ________                    NPPS
NEOB000                EMPLOYEE SERVICE RECORD - EMPSERV
--------------------------------------------------------------------------------


SSN:  ___ __ ____

NAME:  _______________________ ____________
          (LAST NAME)         (FIRST NAME)









--------------------------------------------------------------------------------
 PF1= HELP                  PF5= MAIN MENU                    PF12= END
```

Employee Service Record (EMPSERV)

DESCRIPTION AND EXECUTION

The Employee Service Record (EMPSERV) template is used to display an active employee's service record.

<u>Steps to Reach Employee Service Record</u>

1. At the Main Menu, select **1** - Personnel.
2. At the Personnel Main Menu, select **8** - Employee Service Record.

DESCRIPTION OF DATA PROCESSING RESULTS AND OUTPUT

Type in the SSN of the employee whose service record you want to view. (Refer to the following screen.)

```
COMMAND: ________                    NPPS
NEOB000                EMPLOYEE SERVICE RECORD - EMPSERV
-------------------------------------------------------------------------------



SSN:  000 00 0001


NAME:  _______________________ _____________
          (LAST NAME)         (FIRST NAME)









-------------------------------------------------------------------------------
 PF1= HELP                  PF5= MAIN MENU                    PF12= END
```

Enter SSN

You may enter the name to begin a personnel history name search if you do not know the employee's SSN. Press **ENTER**. NPPS displays the desired service record. (Refer to the following screens.)

```
NEMB000A                            NPPS
                            EMPLOYEE SERVICE RECORD

NAME:                                                        SSN:
ADDRESS:                                                        DUTY STATUS:

DATE OF BIRTH:                                               WORK SCHEDULE:
SEX:                                                 POSITION CRITICALITY:
DUTY STATION:                                           POSITION OCCUPIED:
ORGANIZATION:                                             PART-TIME HOURS:
FEDERAL SERVICE COMPUTATION DATE:                                 TENURE:
NASA SERVICE COMPUTATION DATE:                              VETERAN PREF:
INSTALLATION EOD DATE:                               VETERAN PREFERENCE RIF:
NEXT WIG DATE:                                          ANNUITANT INDICATOR:
LAST PROMOTION DATE:                                        RETIREMENT PLAN:
NEW SUPERVISOR DATE:                                                CITIZEN:
TENURE BEGINNING DATE:                       UNION BARGAINING UNIT STATUS:
TENURE ENDING DATE:                                     FEGLI STATUS CODE:
PROBATIONARY END DATE:                                     FEHB PLAN CODE:
FLSA PAY STATUS:                                        COMPETITIVE LEVEL:
NON NASA APPROPRIATION CODE:                                             :
PERF. CURRENT:          PERF PR1:           PR2:            PR3:         :
 PF1= HELP           PF3= PREV SCREEN   PF5= MAIN MENU        PF12= END_
```

View Service Record (Page 1)

```
NEMB000B                          NPPS
                        EMPLOYEE SERVICE RECORD         PAGE  0 OF 0

 NAME: YOUNGER                JANE         B              SSN: 000 00 0001

  NOAC  EFDATE            PERSONNEL ACTION TITLE
  ORG   PDN               OPM TITLE
                          NASA TITLE
                          OPM   NASA/SUPV  PP-GR/ST PRD PB ADJ-BASIC  SCH-ADJ
                          DUTY STATION









  PF1= HELP           PF3= PREV SCREEN   PF5= MAIN MENU        PF7= BACKWARD
  PF8= FORWARD        PF11= GO TO        PF12= END
```

View Service Record (Page 2)

```
NEMB000C                          NPPS
                        EMPLOYEE SERVICE RECORD




   OPF Sent to: ____________________________________   Date: ____________

   EPF Sent to: ____________________________________   Date: ____________

   EMF Sent to: ____________________________________   Date: ____________

   Leave Record Sent: ________________________________

   Reason for Resignation: ____________________________




  PF1= HELP           PF3= PREV SCREEN   PF5= MAIN MENU        PF12= END
```

View Service Record (Page 3)

4.1.7 Personnel History File Maintenance

```
COMMAND: ________                    NPPS
NEOC000            HISTORY MAINTENANCE MAIN MENU - HISTMAIN
-------------------------------------------------------------------------------



SSN:  ___ __ ____    NOAC:  _____    EFDATE:  __ __ ____   FUNC:  _









-------------------------------------------------------------------------------
 FUNCTION:    A= ADD     B = BROWSE     C= CHANGE     D= DELETE     R= RETRIEVE
       PF1= HELP                PF5= MAIN MENU                PF12= END
```

History Maintenance Main Menu (HISTMAIN)

DESCRIPTION AND EXECUTION

The History Maintenance Main Menu (HISTMAIN) template is used to change or delete any personnel history record on the personnel history file.

<u>Steps to Reach History Maintenance Main Menu</u>

1. At the Main Menu, select **1** - Personnel.
2. At the Personnel Main Menu, select **9** - Personnel History File Maintenance.

DESCRIPTION OF DATA PROCESSING RESULTS AND OUTPUT

Five functions are available on this screen. Functions "A" (Add), "C" (Change), "D" (Delete), and "R" (Retrieve) are used when you know the exact record to be processed. Function "B" (Browse) is used when you are not sure of the exact record and want to select the record from a list. To Add, Change, Delete, or Review a record, type in the SSN, NOAC, and Effective Date of the action and the appropriate function. Press **ENTER.** (Refer to the following screen.)

```
COMMAND: ________                    NPPS
NEOC000            HISTORY MAINTENANCE MAIN MENU - HISTMAIN
-------------------------------------------------------------------------------



SSN:  001 00 0001    NOAC:  721__    EFDATE:  09 01 1994   FUNC:  R









-------------------------------------------------------------------------------
 FUNCTION:    A= ADD     B = BROWSE     C= CHANGE     D= DELETE     R= RETRIEVE
       PF1= HELP                PF5= MAIN MENU                PF12= END
```

Select Action

If you select the Browse function, you will be prompted to enter either an SSN or a Name. Refer to the following screen.

```
COMMAND: ________                    NPPS
NEOC000            HISTORY MAINTENANCE MAIN MENU - HISTMAIN
-------------------------------------------------------------------------------

SSN:  ___ __ ____    NOAC:  _____    EFDATE:  __ __ ____   FUNC:



                              HISTORY BROWSE
   ---------------------------------------------------------------------
   ENTER NAME OR SSN TO BROWSE:

          SSN:   001 00 0001
          OR
          NAME:  ______________________   ____________

   ---------------------------------------------------------------------
          PF3=  PREV SCREEN
```

Initiate Browse By SSN

If SSN is entered, a list of all records with a Current SSN equal to the SSN entered and all records with a Previous SSN equal to the SSN entered will be displayed. (Refer to the following screens.)

```
COMMAND: ________                    NPPS
NEOC000            HISTORY MAINTENANCE MAIN MENU - HISTMAIN

     NEOC010                     PERSONNEL HISTORY BROWSE

    BEGINNING SOCIAL SECURITY NO: _________
    TYPE 'X' TO SELECT AND PRESS ENTER

       ------------ CURRENT ------------    ------------ PREVIOUS -----------
    SEL   SSN      DATE   NOAC    NAME   SEL   SSN      DATE   NOAC    NAME
     _ 001000001 09/07/94 875   JAMESTON  _ 001019443 01/01/92 990   SHELDER
     _ 001000001 09/01/94 721   JAMESTON  _ 001019443 01/02/91 894   SHELDER
     _ 001000001 09/01/94 872   JAMESTON  _ 001019443 01/01/91 990   SHELDER
     _ 001000001 08/16/94 792   JAMESTON  _ 001019443 12/31/90 894   SHELDER
     _ 001000001 05/13/94 875   JAMESTON  _ 001019443 09/10/89 920   SHELDER
     _ 001000001 03/18/94 815   JAMESTON  _ 001019443 09/10/89 990   SHELDER
        PF7 = BACKWARD   PF8 = FORWARD       PF9 = BACKWARD  PF10 = FORWARD
        PF6 = FULL SCREEN                    PF11 = FULL SCREEN
                                  PF3 = PREV SCREEN
```

SSN Browse

This screen is split into two sides. The Current side contains all records with the Current SSN equal to the SSN entered. The Previous side contains all records with a Previous SSN equal to the SSN entered. The PF7 and PF8 keys are used to scroll through the Current information and the PF9 and PF10 keys are used to scroll through the Previous information. Pressing PF6 or PF11 will display an expanded screen that includes the employee's full name, the NOAC corrected, and the Organization: Assigned. (Refer to the following screen.)

```
COMMAND: ________                    NPPS
NEOC000            HISTORY MAINTENANCE MAIN MENU - HISTMAIN




              BROWSE BY CURRENT SOCIAL SECURITY NUMBER

  SEL   SSN      DATE   NOAC1 AUTH   ORG             NAME
   _ 001000001 09/07/94 875__  V3G  AB111 JAMESTON, MELINDA ANN_________
   _ 001000001 09/01/94 721__  CGM  AB111 JAMESTON, MELINDA ANN_________
   _ 001000001 09/01/94 872__  CGM  CC231 JAMESTON, MELINDA ANN_________
   _ 001000001 08/16/94 792__  CGM  AB111 JAMESTON, MELINDA ANN_________
   _ 001000001 05/13/94 875__  V3G  CC231 JAMESTON, MELINDA ANN_________
   _ 001000001 03/18/94 815__  KLM  CC231 JAMESTON, MELINDA ANN_________
```

SSN Browse - Expanded Layout

If Name is entered with a function "B", a list of all records with a Current Name equal to the Name entered and all records with a Previous Name equal to the Name entered will be displayed. (Refer to the following screens.)

```
COMMAND: ________                    NPPS
NEOC000            HISTORY MAINTENANCE MAIN MENU - HISTMAIN
-------------------------------------------------------------------------------

SSN:  ___ __ ____    NOAC:  _____    EFDATE:  __ __ ____   FUNC:  B


                                HISTORY BROWSE

  ---------------------------------------------------------------------------

  ENTER NAME OR SSN TO BROWSE:

         SSN:   ___ __ ____

         OR

        NAME:  Smith_________________   ____________

  ---------------------------------------------------------------------------

        PF3=  PREV SCREEN
```

Initiate Browse By Name

```
COMMAND: ________                    NPPS
NEOC000            HISTORY MAINTENANCE MAIN MENU - HISTMAIN

     NEOC020                PERSONNEL HISTORY BROWS
.
    BEGINNING NAME: ____________________________________
    TYPE 'X' TO SELECT AND PRESS ENTER
.
       ------------ CURRENT ------------    ------------ PREVIOUS
    SEL   NAME     DATE   NOAC     SSN   SEL  NAME      DATE   NOAC     SSN
     _ SMITH JAN 01/01/92 990   100101009 _ TADPOLE F 01/01/92 990   100988122
     _ SMITH JAN 01/02/91 894   100101009 _ TADPOLE F 01/01/91 943   100988122
     _ SMITH JAN 01/01/91 990   100101009 _ TADPOLE F 01/01/91 990   100988122
     _ SMITH JAN 01/01/91 991   100101009 _ TADPOLE F 12/30/90 101   100988122
     _ SMITH JAN 12/31/90 894   100101009 _ TADPOLE F 08/27/89 894   100988122
     _ SMITH JAN 12/31/90 990   100101009 _ TADPOLE F 09/01/87 894   100988122
        PF7 = BACKWARD   PF8 = FORWARD       PF9 = BACKWARD  PF10 = FORWARD
        PF6 = FULL SCREEN                    PF11 = FULL SCREEN
                                  PF3 = PREV SCREEN
```

Name Browse

This screen is split into two sides. The Current side contains all records with the Current Name equal to the Name entered. The Previous side contains all records with a Previous Name equal to the Name entered. The PF7 and PF8 keys are used to scroll through the Current information and the PF9 and PF10 keys are used to scroll through the Previous information. Pressing PF6 or PF11 will display an expanded screen that includes the employee's full name, the NOAC corrected, and the Organization: Assigned. (Refer to the following screen.)

```
COMMAND: ________                    NPPS
 NEOC000            HISTORY MAINTENANCE MAIN MENU - HISTMAIN




              BROWSE BY CURRENT NAME

   SEL             NAME                  SSN       DATE   NOAC1 AUTH   ORG
    _  SMITH JANE M                   100101009 01/01/92 990         AH111
    _  SMITH JANE M                   100101009 01/02/91 894    ZLM  AH111
    _  SMITH JANE M                   100101009 01/01/91 990         AH111
    _  SMITH JANE M                   100101009 01/01/91 991         AH111
    _  SMITH JANE M                   100101009 12/31/90 894    RUM  AH111
    _  SMITH JANE M                   100101009 12/31/90 990         AH111
```

Name Browse - Expanded Layout

When a record is selected from one of the Browse screens, the SSN, NOAC, and EFDATE will be populated on the Personnel History Maintenance Main Menu. When you select the desired function and press **ENTER**, NPPS displays the Personnel History Maintenance screens (refer to the following screens). Press **ENTER** to continue to the next screen, **PF6** to end the action, or **PF11** to go to a specific screen.

```
NEMC000A                          NPPS                    1 OF 25
MODE: CHANGE            PERSONNEL HISTORY MAINTENANCE
--------------------------------------------------------------------------
NAME                                                  SSN
NOAC1                              EFDATE                 0  > _______0
NOAC2                >    _____    BYPASS EDIT
NOACNTE1             > ________    MATUREDTE              0
NOACNTE2             > ________    ENTRYCLERK/DTE                      0
AUTH1                >      ___    UPDATECLERK/DTE                     0
AUTH2                >      ___    UPDATETIME
AGE             0.0 >     __.0     PREVSSN                  > _________
TIME IN GRADE   0.0 >     __.0     INSTALLCURRT          0.0 >      __.0
NSCDCURRT       0.0 >     __.0     CORCAN FLAG              >         _
FSCDCURRT       0.0 >     __.0     SEQ                    1 >         0
NOAC DESCRIPTION    ____________________________________________________
NAME(LAST,GENS,FIRST,
     MIDDLE)             ______________________ ___ ___________ ___________
PREVIOUS NAME(LAST,GENS,
            FIRST,MIDDLE) ______________________ ___ ___________ ___________
 PF1= HELP                      PF3= PREV SCREEN                PF5= MAIN MENU
 PF6= END ACTION                PF11= GO TO                     PF12= END
```

Personnel History Maintenance (Page 1)

```
NEMC000B                          NPPS                    2 OF 25
MODE: CHANGE            PERSONNEL HISTORY MAINTENANCE
--------------------------------------------------------------------------
NAME                                                  SSN
                B E F O R E                    A F T E R
ADMINLEV             >       _____                 >       _____
AGENCY               >        ____                 >        ____
AGENCYFROM           >        ____                 >        ____
AGENCYTO             >        ____                 >        ____
ANUIND               >           _                 >           _
APPTNTEDTE         0 >    _______0               0 >    _______0
AWDAMT          0.00 >    _____. 0            0.00 >    _____. 0
AWDBEN          0.00 > ________. 0            0.00 > ________. 0
AWDCHK               >           _                 >           _
AWDGRP               >        ____                 >        ____
AWDTYP               >           _                 >           _
AWDYR                >          __                 >          __
BDYR                 >        ____                 >        ____
--------------------------------------------------------------------------
 PF1= HELP                      PF3= PREV SCREEN                PF5= MAIN MENU
 PF6= END ACTION                PF11= GO TO                     PF12= END
```

Personnel History Maintenance (Page 2)

```
NEMC000C                          NPPS                    3 OF 25
MODE: CHANGE            PERSONNEL HISTORY MAINTENANCE
--------------------------------------------------------------------------------
NAME                                                      SSN
                B E F O R E                     A F T E R
BIRTHDTE           0 > _______0                   0 > _______0
CITIZEN              >        _                     >        _
COMPLEV              >     ____                     >     ____
CONVENDDTE         0 > _______0                   0 > _______0
COOPENTRYDTE       0 > _______0                   0 > _______0
COOPFLD              >   ______                     >   ______
COOPLEV              >        _                     >        _
COOPRTDDTE         0 > _______0                   0 > _______0
COOPRTSDTE         0 > _______0                   0 > _______0
COOPSCH              > ________                     > ________
COOPYR               >     ____                     >     ____
CPP                  >       __                     >       __
CREDMILSERV        0 >   _____0                   0 >   _____0
--------------------------------------------------------------------------------
 PF1= HELP                      PF3= PREV SCREEN                PF5= MAIN MENU
 PF6= END ACTION                PF11= GO TO                     PF12= END
```

Personnel History Maintenance (Page 3)

```
NEMC000D                          NPPS                    4 OF 25
MODE: CHANGE            PERSONNEL HISTORY MAINTENANCE
--------------------------------------------------------------------------------
NAME                                                      SSN
                B E F O R E                     A F T E R
CURRGRDDTE         0 >  _______0                  0 >  _______0
DAYLIMIT           0 >       __0                  0 >       __0
DEPARTDEST           >         _                    >         _
DEPARTRSN            >         _                    >         _
DETAILENDDTE       0 >  _______0                  0 >  _______0
DLRLIMIT        0.00 > ______. 0               0.00 > ______. 0
DTLDTYSTN            > _________                    > _________
DTLGRADE           0 >        _0                  0 >        _0
DTLNCC               >     _____                    >     _____
DTLOCCODE            >     _____                    >     _____
DTLORGASSIGN         >     _____                    >     _____
DTLPAYPLN            >       __                     >       __
DTLPDN               >    ______                    >    ______
--------------------------------------------------------------------------------
 PF1= HELP                      PF3= PREV SCREEN                PF5= MAIN MENU
 PF6= END ACTION                PF11= GO TO                     PF12= END
```

Personnel History Maintenance (Page 4)

```
NEMC000E                          NPPS                    5 OF 25
MODE: CHANGE            PERSONNEL HISTORY MAINTENANCE
--------------------------------------------------------------------------------
NAME                                                      SSN

BEFORE:  DTLNASATTL
                    ____________________________________________________________
AFTER :  DTLNASATTL
                    ____________________________________________________________
BEFORE:  DTLOPMTTL
                    ____________________________________________________________
AFTER :  DTLOPMTTL
                    ____________________________________________________________
BEFORE:  DTYSTNNAME
                    ____________________________________________________________
AFTER :  DTYSTNNAME
                    ____________________________________________________________

--------------------------------------------------------------------------------
 PF1= HELP                      PF3= PREV SCREEN                PF5= MAIN MENU
 PF6= END ACTION                PF11= GO TO                     PF12= END
```

Personnel History Maintenance (Page 5)

```
NEMC000F                          NPPS                    6 OF 25
MODE: CHANGE            PERSONNEL HISTORY MAINTENANCE
--------------------------------------------------------------------------------
NAME                                                      SSN
                B E F O R E                     A F T E R
DTLTITLECDE           >        __                   >        __
DTYSTN                > _________                   > _________
DTYSTS                >         _                   >         _
EDLEV                 >        __                   >        __
EMPIND                >         _                   >         _
EMPNO                 >    ______                   >    ______
EODDTE              0 >  _______0                 0 >  _______0
FACILITY              >         _                   >         _
FEGLI                 >        __                   >        __
FEHB                  >     _____                   >     _____
FEHBFULLPAY           >         _                   >         _
FERSCOVER             >         _                   >         _
FINSTM                >         _                   >         _
--------------------------------------------------------------------------------
 PF1= HELP                      PF3= PREV SCREEN                PF5= MAIN MENU
 PF6= END ACTION                PF11= GO TO                     PF12= END
```

Personnel History Maintenance (Page 6)

```
NEMC000G                          NPPS                    7 OF 25
MODE: CHANGE            PERSONNEL HISTORY MAINTENANCE
-------------------------------------------------------------------------------
NAME                                                      SSN
                B E F O R E                     A F T E R
FINSTMDTE          0 >    _______0                0      _______0
FLSA                 >           _                  >           _
FOLLOW1            0 > __ _______0                0 > __ _______0
FOLLOW2            0 > __ _______0                0 > __ _______0
FOLLOW3            0 > __ _______0                0 > __ _______0
FOLLOW4            0 > __ _______0                0 > __ _______0
FOLLOW5            0 > __ _______0                0 > __ _______0
FOLLOW6            0 > __ _______0                0 > __ _______0
FOLLOW7            0 > __ _______0                0 > __ _______0
FOLLOW8            0 > __ _______0                0 > __ _______0
FOUFLD               >      ______                  >      ______
FOULEV               >           _                  >           _
FOUSCH               >    ________                  >    ________
-------------------------------------------------------------------------------
 PF1= HELP                      PF3= PREV SCREEN                PF5= MAIN MENU
 PF6= END ACTION                PF11= GO TO                     PF12= END
```

Personnel History Maintenance (Page 7)

```
NEMC000H                          NPPS                    8 OF 25
MODE: CHANGE            PERSONNEL HISTORY MAINTENANCE
-------------------------------------------------------------------------------
NAME                                                      SSN
                B E F O R E                     A F T E R
FOUYR                >     ____                   >      ____
FROZENCSRS         0 >   _____0                   0 >   _____0
FSCDTE             0 > _______0                   0 > _______0
FTELI                >       __                     >       __
FUNCCLASS            >       __                     >       __
FURNTEDTE          0 > _______0                   0 > _______0
GRADE              0 >       _0                   0 >       _0
GRADERETN            >       __                     >       __
HANDICAP             >       __                     >       __
HEAD-AGENCY          >        _                     >        _
HIFLD                >   ______                     >   ______
HIGRADE            0 >       _0                   0 >       _0
HILEV                >        _                     >        _
-------------------------------------------------------------------------------
 PF1= HELP                      PF3= PREV SCREEN                PF5= MAIN MENU
 PF6= END ACTION                PF11= GO TO                     PF12= END
```

Personnel History Maintenance (Page 8)

```
NEMC000I                          NPPS                    9 OF 25
MODE: CHANGE            PERSONNEL HISTORY MAINTENANCE
-------------------------------------------------------------------------------
NAME                                                      SSN
                 B E F O R E                    A F T E R
HIPAYPLN               >          __                >          __
HISCH                  >    ________                >    ________
HIYR                   >        ____                >        ____
HRLIMIT              0 >        ___0              0 >        ___0
INSTALL                >                        JCH1 >        ____
LASTPROMODTE         0 >    _______0              0 >    _______0
LEQDTE               0 >    _______0              0 >    _______0
LVENTITLE              >           _                >           _
LWOPNTEDTE           0 >    _______0              0 >    _______0
LWPNTEDTE            0 >    _______0              0 >    _______0
MINCDE                 >           _                >           _
NAMEFIRST              > ___________                > ___________
NAMEGENSUFX            >         ___                >         ___
-------------------------------------------------------------------------------
 PF1= HELP                     PF3= PREV SCREEN                PF5= MAIN MENU
 PF6= END ACTION               PF11= GO TO                     PF12= END
```

Personnel History Maintenance (Page 9)

```
NEMC000J                          NPPS                   10 OF 25
MODE: CHANGE            PERSONNEL HISTORY MAINTENANCE
-------------------------------------------------------------------------------
NAME                                                      SSN

BEFORE: LOCALTTL
                 __________________________
AFTER : LOCALTTL
                 __________________________
BEFORE: NASATTL
                 ____________________________________________________
AFTER : NASATTL
                 ____________________________________________________
BEFORE: OPMTTL
                 ____________________________________________________
AFTER : OPMTTL
                 ____________________________________________________

-------------------------------------------------------------------------------
 PF1= HELP                     PF3= PREV SCREEN                PF5= MAIN MENU
 PF6= END ACTION               PF11= GO TO                     PF12= END
```

Personnel History Maintenance (Page 10)

```
NEMC000K                          NPPS                    11 OF 25
MODE: CHANGE            PERSONNEL HISTORY MAINTENANCE
--------------------------------------------------------------------------------
NAME                                                      SSN
                 B E F O R E                    A F T E R
NAMELAST
              ____________________          ____________________

NCC                  >       _____                >       _____
NEWSUPBEGDTE       0 >     _______0             0 >     _______0
NEWSUPENDDTE       0 >     _______0             0 >     _______0
NEXTWIGDTE         0 >     _______0             0 >     _______0
NNASAAPPRO

                ________________              ________________

NNASAPROJLI          >   __________               >   __________
NSCDTE             0 >     _______0             0 >     _______0
NSPI                 >      ______                >      ______
OCCODE               >       _____                >       _____
ORGASSIGN            >       _____                >       _____
--------------------------------------------------------------------------------
 PF1= HELP                     PF3= PREV SCREEN                PF5= MAIN MENU
 PF6= END ACTION               PF11= GO TO                     PF12= END
```

Personnel History Maintenance (Page 11)

```
NEMC000L                          NPPS                    12 OF 25
MODE: CHANGE            PERSONNEL HISTORY MAINTENANCE
--------------------------------------------------------------------------------
NAME                                                      SSN
               B E F O R E                    A F T E R
ORGLOC               >    _____                   >    _____
PAYBASIS             >       __                   >       __
PAYPLN               >       __                   >       __
PAYPLNRETN           >       __                   >       __
PAYTABLE             >      ___                   >      ___
PDN                  >   ______                   >   ______
PEFRATC            0 >        0                 0 >        0
PEFRATCYR            >       __                   >       __
PEFRATP1           0 >        0                 0 >        0
PEFRATP1YR           >       __                   >       __
PEFRATP2           0 >        0                 0 >        0
PEFRATP2YR           >       __                   >       __

--------------------------------------------------------------------------------
 PF1= HELP                     PF3= PREV SCREEN                PF5= MAIN MENU
 PF6= END ACTION               PF11= GO TO                     PF12= END
```

Personnel History Maintenance (Page 12)

```
NEMC000M                          NPPS                    13 OF 25
MODE: CHANGE            PERSONNEL HISTORY MAINTENANCE
-------------------------------------------------------------------------------
NAME                                                      SSN
                B E F O R E                     A F T E R
POSCHGNTEDTE        0 > _______0                  0 > _______0
POSCRIT               >      ___                    >      ___
POSOCC                >        _                    >        _
POSTYPE               >        _                    >        _
POSTYPELOC            >       __                    >       __
PRD                   >        _                    >        _
PRIORRETCOV           >        _                    >        _
PROBENDDTE          0 > _______0                  0 > _______0
PROJPROMO             >       __                    >       __
PROMONTEDTE         0 > _______0                  0 > _______0
PTHOURS               >       __                    >       __
RETDISDTE           0 > _______0                  0 > _______0

-------------------------------------------------------------------------------
 PF1= HELP                      PF3= PREV SCREEN                PF5= MAIN MENU
 PF6= END ACTION                PF11= GO TO                     PF12= END
```

Personnel History Maintenance (Page 13)

```
NEMC000N                          NPPS                    14 OF 25
MODE: CHANGE            PERSONNEL HISTORY MAINTENANCE
-------------------------------------------------------------------------------
NAME                                                      SSN
                B E F O R E                     A F T E R
RETENEXPDTE         0 >    _______0               0 >    _______0
RETOPTDTE           0 >    _______0               0 >    _______0
RETPLAN               >           _                  >           _
RMPAYSTAT             >           _                  >           _
RMRETIRBASIS          >           _                  >           _
RMRETIRDTE          0 >    _______0               0 >    _______0
RMSVCCOMP             >           _                  >           _
RMSVCDESIG            >           _                  >           _
RMSVCNUM              > ___________                  > ___________
RMSVCPAYGRD           >         ___                  >         ___
RRBRANCH              >          __                  >          __
RRRANK                >          __                  >          __
RSCDTE              0 >    _______0               0 >    _______0
-------------------------------------------------------------------------------
 PF1= HELP                      PF3= PREV SCREEN                PF5= MAIN MENU
 PF6= END ACTION                PF11= GO TO                     PF12= END
```

Personnel History Maintenance (Page 14)

```
NEMC000O                          NPPS                    15 OF 25
MODE: CHANGE            PERSONNEL HISTORY MAINTENANCE
--------------------------------------------------------------------------------
NAME                                                        SSN
                B E F O R E                     A F T E R
RTD                  >         _                    >         _
RTDGROUP             >        __                    >        __
SABBNTEDTE         0 >  _______0                  0 >  _______0
SALANN          0.00 > ______. 0               0.00 > ______. 0
SALDAILY        0.00 > ______. 0               0.00 > ______. 0
SALHOURLY       0.00 > ______. 0               0.00 > ______. 0
SECFLD               >    ______                    >    ______
SECLEV               >         _                    >         _
SECSCH               >  ________                    >  ________
SECYR                >      ____                    >      ____
SES PROB           0 >  _______0                  0 >  _______0
SEX                  >         _                    >         _
STEP                 >        __                    >        __
--------------------------------------------------------------------------------
 PF1= HELP                      PF3= PREV SCREEN                PF5= MAIN MENU
 PF6= END ACTION                PF11= GO TO                     PF12= END
```

Personnel History Maintenance (Page 15)

```
NEMC000P                          NPPS                    16 OF 25
MODE: CHANGE            PERSONNEL HISTORY MAINTENANCE
--------------------------------------------------------------------------------
NAME                                                        SSN
                B E F O R E                     A F T E R
STEPRETN             >       __                    >       __
SUPIND               >        _                    >        _
SUSPNTEDTE         0 > _______0                  0 > _______0
TENURE               >        _                    >        _
TENUREBEGDTE       0 > _______0                  0 > _______0
TENUREENDDTE       0 > _______0                  0 > _______0
THRFLD               >   ______                    >   ______
THRLEV               >        _                    >        _
THRSCH               > ________                    > ________
THRYR                >     ____                    >     ____
TITLECDE             >       __                    >       __
TRAINDEVPGM          >       __                    >       __
TSPELIGDTE         0 > _______0                  0 > _______0
--------------------------------------------------------------------------------
 PF1= HELP                      PF3= PREV SCREEN                PF5= MAIN MENU
 PF6= END ACTION                PF11= GO TO                     PF12= END
```

Personnel History Maintenance (Page 16)

```
NEMC000Q                          NPPS                    17 OF 25
MODE: CHANGE            PERSONNEL HISTORY MAINTENANCE
------------------------------------------------------------------------------
NAME                                                        SSN
                B E F O R E                     A F T E R
TSPSCDTE           0 > _______0                   0 > _______0
TSPSEPCODE           >        _                     >        _
TSPSEPDTE          0 > _______0                   0 > _______0
TSPSTATUS            >        _                     >        _
TSPSTATUSDTE       0 > _______0                   0 > _______0
TSPVEST              >        _                     >        _
UNIONBU              >     ____                     >     ____
VETPREF              >        _                     >        _
VETPREFRIF           >        _                     >        _
VETSTATUS            >        _                     >        _
WIGWENDDTE         0 > _______0                   0 > _______0
WORKSCH              >        _                     >        _
------------------------------------------------------------------------------
 PF1= HELP                      PF3= PREV SCREEN                PF5= MAIN MENU
 PF6= END ACTION                PF11= GO TO                     PF12= END
```

Personnel History Maintenance (Page 17)

```
NEMC000R                          NPPS                    18 OF 25
MODE: CHANGE            PERSONNEL HISTORY MAINTENANCE
------------------------------------------------------------------------------
NAME                                                        SSN
                B E F O R E                     A F T E R
COOPGPA         0.00 > _. 0                    0.00 > _. 0
FOUGPA          0.00 > _. 0                    0.00 > _. 0
HIGPA           0.00 > _. 0                    0.00 > _. 0
SECGPA          0.00 > _. 0                    0.00 > _. 0
THRGPA          0.00 > _. 0                    0.00 > _. 0
BEFORE: ORGALEVEL1
                _______________________________________
AFTER : ORGALEVEL1
                _______________________________________
BEFORE: ORGALEVEL2
                _______________________________________
AFTER : ORGALEVEL2
                _______________________________________
------------------------------------------------------------------------------
 PF1= HELP                      PF3= PREV SCREEN                PF5= MAIN MENU
 PF6= END ACTION                PF11= GO TO                     PF12= END
```

Personnel History Maintenance (Page 18)

```
NEMC000S                          NPPS                    19 OF 25
MODE: CHANGE            PERSONNEL HISTORY MAINTENANCE
--------------------------------------------------------------------------------
NAME                                                     SSN

BEFORE:  ORGALEVEL3
                    ________________________________________
AFTER :  ORGALEVEL3
                    ________________________________________
BEFORE:  ORGALEVEL4
                    ________________________________________
AFTER :  ORGALEVEL4
                    ________________________________________
BEFORE:  AWARD-GROUP-TEXT
                         ______________________________
AFTER:   AWARD-GROUP-TEXT
                         ______________________________


--------------------------------------------------------------------------------
 PF1= HELP                      PF3= PREV SCREEN                PF5= MAIN MENU
 PF6= END ACTION                PF11= GO TO                     PF12= END_
```

Personnel History Maintenance (Page 19)

```
NEMC000T                          NPPS                    20 OF 25
MODE: CHANGE            PERSONNEL HISTORY MAINTENANCE
--------------------------------------------------------------------------------
NAME                                                     SSN
                                 B E F O R E               A F T E R
EMPL-ADJSTD-BASIC-PAY-AMT       0.00 >  ______. 0        0.00 >  ______. 0
EMPL-AUO-ANL-AMT                   0 >  ____0               0 >  ____0
EMPL-AUO-PCT                       0 >  _0                  0 >  _0
EMPL-BASIC-PAY-AMT              0.00 >  ______. 0        0.00 >  ______. 0
EMPL-BONUS-DFRNTL-BASIS-CODE         >  _                     >  _
EMPL-BONUS-RCRTMNT-AMT             0 >  ____0               0 >  ____0
EMPL-BONUS-RCRTMNT-PCT             0 >  _0                  0 >  _0
EMPL-BONUS-RLCTN-AMT               0 >  ____0               0 >  ____0
EMPL-BONUS-RLCTN-PCT               0 >  _0                  0 >  _0
EMPL-FRGN-LNG-ANL-AMT              0 >  ____0               0 >  ____0
EMPL-LCLTY-ADJSTMNT-ANL-AMT        0 >  ____0               0 >  ____0
EMPL-LCLTY-ADJSTMNT-IND              >  __                    >  __
EMPL-OTHR-PAY-AMT                  0 >  _____0              0 >  _____0
--------------------------------------------------------------------------------
 PF1= HELP                      PF3= PREV SCREEN                PF5= MAIN MENU
 PF6= END ACTION                PF11= GO TO                     PF12= END
```

Personnel History Maintenance (Page 20)

```
NEMC000U                          NPPS                    21 OF 25
MODE: CHANGE            PERSONNEL HISTORY MAINTENANCE
--------------------------------------------------------------------------------
NAME                                                     SSN
                                B E F O R E                A F T E R
RETENTION-ALLOW                    0 >  ____0                0 >  ____0
EMPL-RTNTN-ALWNC-NTE-DATE          0 >  _______0             0 >  _______0
EMPL-RTNTN-ALWNC-PCT               0 >  _0                   0 >  _0
SUPER-DIFF                         0 >  ____0                0 >  ____0
EMPL-SPRVSRY-DFRNTL-PCT              >  __                     >  __
EMPL-SRVC-AGRMNT-END-DATE          0 >  _______0             0 >  _______0
EMPL-STFNG-DFRNTL-ANL-AMT          0 >  ____0                0 >  ____0
EMPL-STFNG-DFRNTL-PCT              0 >  _0                   0 >  _0
EMPL-TOT-PAY-AMT                0.00 >  ______. 0         0.00 >  ______. 0
EMPL-TIME-OFF-AWARD-HOURS        0.0 >  ___.0              0.0 >  ___.0
EMPL-TOA-HRS-YTD-GRNTD-QTY      0.00 >  ____. 0           0.00 >  ____. 0
EMPL-PRFRMNC-RTNG-YEAR3-CODE       0 >  0                    0 >  0
EMPL-PRFRMNC-RTNG-YEAR3-YEAR         >  __                     >  __
--------------------------------------------------------------------------------
 PF1= HELP                     PF3= PREV SCREEN                PF5= MAIN MENU
 PF6= END ACTION               PF11= GO TO                     PF12= END
```

Personnel History Maintenance (Page 21)

```
NEMC000V                          NPPS                    22 OF 25
MODE:                   PERSONNEL HISTORY MAINTENANCE
--------------------------------------------------------------------------------
NAME                                                     SSN
                                B E F O R E                A F T E R
EMPL-SCH-BASIC-PAY              0.00 >  ______. 0         0.00 >  ______. 0
EMPL-SCH-ADJSTD-BASIC-PAY       0.00 >  ______. 0         0.00 >  ______. 0
EMPL-RDCTN-IN-FRC-NTE-DATE         0 >  _______0             0 >  _______0
EMPL-LCTD-INSTLTN-CODE               >  ____                   >  ____
EMPL-CRNT-RTNG-EFCTV-DATE          0 >  _______0             0 >  _______0
EMPL-PRIOR1-RTNG-EFCTV-DATE        0 >  _______0             0 >  _______0
EMPL-PRIOR2-RTNG-EFCTV-DATE        0 >  _______0             0 >  _______0
EMPL-PRIOR3-RTNG-EFCTV-DATE        0 >  _______0             0 >  _______0
EMPL-SRVC-CMPTN-RTRMNT-DATE        0 >  _______0             0 >  _______0
EMPL-AWARD-BDGT-CODE                 >  ________               >  ________
EMPL-FERS-MRA-DATE                   >  ________               >  ________
EMPL-ARMY-LINE-NMBR-CODE             >  ________               >  ________
EMPL-ARMY-PRGRPH-CODE                >  ________               >  ________
--------------------------------------------------------------------------------
 PF1= HELP                     PF3= PREV SCREEN                PF5= MAIN MENU
 PF6= END ACTION               PF11= GO TO                     PF12= END
```

Personnel History Maintenance (Page 22)

```
NEMC000Y                              NPPS                    23 OF 25
MODE:                    PERSONNEL HISTORY MAINTENANCE
--------------------------------------------------------------------------------
NAME                                                        SSN
                                  B E F O R E                A F T E R
EMPL-AVLBLTY-PAY-ANL-AMT          0 >  ____0                0 >  ____0
EMPL-SCHDL-LCLTY-ADJ-ANL-AMT      0 >  ____0                0 >  ____0
EMPL-SCHDL-TOT-PAY-AMT            0 >  _____. 0             0 >  ______. 0
EMPL-CRNT-RTNG-PTRN-CODE            >  _                      >  _
EMPL-PRIOR1-RTNG-PTRN-CODE          >  _                      >  _
EMPL-PRIOR2-RTNG-PTRN-CODE          >  _                      >  _
EMPL-PRIOR3-RTNG-PTRN-CODE          >  _                      >  _





--------------------------------------------------------------------------------
 PF1= HELP                       PF3= PREV SCREEN                PF5= MAIN MENU
 PF6= END ACTION                 PF11= GO TO                     PF12= END
```

Personnel History Maintenance (Page 23)

```
NEMC000W                              NPPS                    24 OF 25
MODE: CHANGE             PERSONNEL HISTORY MAINTENANCE
--------------------------------------------------------------------------------
NAME                                                        SSN

OPF-SENT-DATE                       0 >  _______0
EPF-SENT-DATE                       0 >  _______0
EMF-SENT-DATE                       0 >  _______0
OPF-SENT-TO
                 ________________________________________
EPF-SENT-TO
                 ________________________________________
EMF-SENT-TO
                 ________________________________________
LEAVE-RECS-SENT
                 ________________________________
REASON-RESIGNED
                 ____________________________
--------------------------------------------------------------------------------
PF1= HELP                       PF3= PREV SCREEN                PF5= MAIN MENU
PF6= END ACTION                 PF11= GO TO                     PF12= END
```

PersonneL History Maintenance (Page 24)

```
NEMC000X                          NPPS                    25 OF 25
MODE: CHANGE            PERSONNEL HISTORY MAINTENANCE
--------------------------------------------------------------------------------
NAME                                                     SSN

FORWARDING ADDRESS

   STREET LINE 1
                  ____________________________________
   STREET LINE 2
                  ____________________________________
   CITY
                  ________________
   STATE                                ZIP
                  ___                         __________



--------------------------------------------------------------------------------
 PF1= HELP                      PF3= PREV SCREEN                PF5= MAIN MENU
 PF6= END ACTION                PF11= GO TO                     PF12= END
```

Personnel History Maintenance (Page 25)

4.1.7.1 Personnel Audit Browse

```
COMMAND: ________                    NPPS
NEOD000                HISTORY AUDIT MAIN MENU - AUDIT
--------------------------------------------------------------------------------



SSN:  ___ __ ____    NOAC:  _____    EFDATE:  __ __ ____   FUNC:  _

OR

NAME  ____________________  ___________



--------------------------------------------------------------------------------
 FUNCTION:    B= BROWSE   R= RETRIEVE
       PF1= HELP                PF5= MAIN MENU                PF12= END
```

History Audit Main Menu (AUDIT)

DESCRIPTION AND EXECUTION

The History Audit Main Menu (AUDIT) template is used to view the transaction history of all corrections and cancellations that have been applied to the personnel history file.

<u>Steps to Reach History Audit Main Menu</u>

1. At the Main Menu, select **1** - Personnel.
2. At the Personnel Main Menu, select **10** - Personnel Audit Browse.

DESCRIPTION OF DATA PROCESSING RESULTS AND OUTPUT

Two functions are available on this screen. Function "R" (Review) is used when you know the exact record to be viewed. Function "B" (Browse) is used when you are not sure of the exact record and want to select the record from a list. To review a record, type in the SSN, NOAC, and Effective Date of the action and a function "R". Press **ENTER** (refer to the following screen).

```
COMMAND: ________                    NPPS
NEOD000                HISTORY AUDIT MAIN MENU - AUDIT
--------------------------------------------------------------------------------



SSN:  001 00 0001    NOAC:  001__    EFDATE:  08 31 1990   FUNC:  R

OR

NAME  ______________________  ____________









--------------------------------------------------------------------------------
 FUNCTION:    B= BROWSE   R= RETRIEVE
       PF1= HELP                PF5= MAIN MENU                PF12= END
```

Select Action

If you select the browse function, NPPS will generate a list of actions on the history audit file based on the SSN or Name entered.

If SSN is entered with a function "B", a list of all records with a Current SSN equal to the SSN entered and all records with a Previous SSN equal to the SSN entered will be displayed. (Refer to the following screens).

```
COMMAND: ________                    NPPS
NEOD000                HISTORY AUDIT MAIN MENU - AUDIT
--------------------------------------------------------------------------------



SSN:  001 00 0001    NOAC:  _____    EFDATE:  __ __ ____   FUNC:  B

OR

NAME  ______________________  ____________









--------------------------------------------------------------------------------
 FUNCTION:    B= BROWSE   R= RETRIEVE
       PF1= HELP                PF5= MAIN MENU                PF12= END
```

Initiate Browse By SSN

```
COMMAND: ________                    NPPS
NEOD000                HISTORY AUDIT MAIN MENU - AUDIT

    NEOD010                     PERSONNEL HISTORY BROWSE

   BEGINNING SOCIAL SECURITY NO: _________
   TYPE 'X' TO SELECT AND PRESS ENTER

      ------------ CURRENT ------------    ------------ PREVIOUS -----------
   SEL   SSN      DATE   NOAC    NAME   SEL   SSN      DATE   NOAC    NAME
    _ 001000001 09/01/94 002   JAMESTON  _ 001019443 07/01/94 002   SHELDER
    _ 001000001 08/17/94 001   JAMESTON  _ 100313120 09/10/89 002   LARGE
    _ 001000001 08/16/94 002   JAMESTON  _ 100313120 09/10/89 170   LARGE
    _ 001000001 01/01/94 002   JAMESTON  _ 100990017 09/09/90 002 CONTRACTA
    _ 001000001 08/25/89 002   JAMESTON  _ 100990017 09/09/90 140 CONTRACTA
    _                                    _
       PF7 = BACKWARD   PF8 = FORWARD       PF9 = BACKWARD  PF10 = FORWARD
       PF6 = FULL SCREEN                    PF11 = FULL SCREEN
                                  PF3 = PREV SCREEN
```

SSN Browse

This screen is split into two sides. The Current side contains all records with the Current SSN equal to the SSN entered. The Previous side contains all records with a Previous SSN equal to the SSN entered. The PF7 and PF8 keys are used to scroll through the Current information and the PF9 and PF10 keys are used to scroll through the Previous information. Pressing PF6 or PF11 will display an expanded screen that includes the employee's full name, the NOAC corrected, and the Organization: Assigned. (Refer to the following screen).

```
COMMAND: ________                    NPPS
NEOD000                HISTORY AUDIT MAIN MENU - AUDIT




              BROWSE BY CURRENT SOCIAL SECURITY NUMBER

  SEL   SSN      DATE   NOAC1 NOAC2  ORG            NAME
   _ 001000001 09/01/94 002   721   CC231 JAMESTON, MELINDA ANN
   _ 001000001 08/17/94 002   895   AB111 JAMESTON, MELINDA ANN
   _ 001000001 08/16/94 002   450   AB111 JAMESTON, MELINDA ANN
   _ 001000001 01/01/94 002   501   AB111 JAMESTON, MELINDA ANN
   _ 001000001 08/25/89 002   716   AB111 JAMESTON, MELINDA ANN
   _
```

SSN Browse - Expanded Layout

If Name is entered with a function "B", a list of all records with a Current Name equal to the Name entered and all records with a Current Name equal to the Previous Name of the records listed under Current will be displayed. (Refer to the following screens).

```
COMMAND: ________                    NPPS
NEOD000                HISTORY AUDIT MAIN MENU - AUDIT
--------------------------------------------------------------------------------



SSN:  ___ __ ____    NOAC:  _____    EFDATE:  __ __ ____   FUNC:  B

OR

NAME  Smith_________________  ____________









--------------------------------------------------------------------------------
 FUNCTION:    B= BROWSE   R= RETRIEVE
       PF1= HELP                PF5= MAIN MENU                PF12= END
```

Initiate Browse By Name

```
COMMAND: ________                    NPPS
NEOD000                HISTORY AUDIT MAIN MENU - AUDIT

    NEOD020                  HISTORY AUDIT BROWSE

   BEGINNING NAME: ____________________________________
   TYPE 'X' TO SELECT AND PRESS ENTER

      ------------ CURRENT ------------    ------------ PREVIOUS ------------
   SEL   NAME     DATE   NOAC     SSN   SEL  NAME      DATE   NOAC     SSN
    _ SMITH JAN 03/29/91 002   100101009 _ SMITH JOH 12/30/90 002 100101009
    _ SMITH MAR 01/10/91 002   100601250 _ SMITHOREE 12/15/90 001 100595030
    _ SMITH TAY 03/09/90 002   100601254 _
    _ SMITHORS  01/14/91 002   100595030
    _                                    _
    _                                    _
       PF7 = BACKWARD   PF8 = FORWARD       PF9 = BACKWARD  PF10 = FORWARD
       PF6 = FULL SCREEN                    PF11 = FULL SCREEN
                                PF3 = PREV SCREEN
```

Name Browse

This screen is split into two sides. The Current side contains all records with the Current Name equal to the Name entered. The Previous side contains all records with a Previous Name equal to the Name entered. The PF7 and PF8 keys are used to scroll through the Current information and the PF9 and PF10 keys are used to scroll through the Previous information. Pressing PF6 or PF11 will display an expanded screen that includes the employee's full name, the NOAC corrected, and the Organization: Assigned. (Refer to the following screen).

```
COMMAND: ________                    NPPS
NEOD000                HISTORY AUDIT MAIN MENU - AUDIT




             BROWSE BY CURRENT NAME

  SEL            NAME                  SSN       DATE   NOAC1 NOAC2  ORG
   _  SMITH JANE M                  100101009 03/29/91 002   895   AA111
   _  SMITH MARY                    100601250 01/10/91 002   721   AA111
   _  SMITH TAYLOR                  100601254 03/09/90 002   460   AA111
   _  SMITHORS MARKEL LEON          100595030 01/14/91 002   741   AA111
   _
   _
```

Name Browse - Expanded Layout

When a record is selected from one of the Browse screens or the exact record is requested from the History Audit Main Menu, NPPS displays the Perhist Audit Browse screens (refer to the following screens). Press **ENTER** to continue to the next screen, **PF6** to end the action, or **PF11** to go to a specific screen.

```
NEMD000A                          NPPS                    1 OF 11
MODE:                       PERHIST AUDIT BROWSE
-------------------------------------------------------------------------------
NAME                                                        SSN

NOAC1                       EFDATE      0          BYPASS EDIT
NOAC2                       MATUREDTE   0          SEQ          0
NOACNTE1       0            ENTRYDTE    0          ENTRYCLERK
NOACNTE2       0            UPDATEDTE   0          UPDATECLER K
AUTH1                       UPDATETIME             CORCANFLAG
AUTH2                       PREVSSN

NAME:                                  PREVIOUS NAME:
LAST                                   LAST
GEN SUFFIX                             GEN SUFFIX
FIRST                                  FIRST
MIDDLE                                 MIDDLE

-------------------------------------------------------------------------------
 PF1= HELP                     PF3= PREV SCREEN                PF5= MAIN MENU
 PF6= END ACTION               PF11= GO TO                     PF12= END
```

Perhist Audit Browse (Page 1)

```
NEMD000B                          NPPS                    2 OF 11
MODE:                       PERHIST AUDIT BROWSE
--------------------------------------------------------------------------------
NAME                                                        SSN

ADMINLEV                    BIRTHDTE      0            CURRGRDDTE    0
AGENCY                      CITIZEN                    DAYLIMIT      0
AGENCYFROM                  COMPLEV                    DEPARTDEST
AGENCYTO                    CONVENDDTE    0            DEPARTRSN
ANUIND                      COOPENTRYDTE  0            DETAILENDDTE  0
APPTNTEDTE  0               COOPFLD                    DLRLIMIT      0.00
AWDAMT      0.00            COOPLEV                    DTLDTYSTN
AWDBEN      0.00            COOPRTDDTE    0            DTLGRADE      0
AWDCHK                      COOPRTSDTE    0            DTLNCC
AWDGRP                      COOPSCH                    DTLOCCODE
AWDTYP                      COOPYR                     DTLORGASSIGN
AWDYR                       CPP                        DTLPAYPLN
BDYR                        CREDMILSERV   0            DTLPDN
--------------------------------------------------------------------------------
 PF1= HELP                     PF3= PREV SCREEN                PF5= MAIN MENU
 PF6= END ACTION               PF11= GO TO                     PF12= END
```

Perhist Audit Browse (Page 2)

```
NEMD000C                          NPPS                    3 OF 11
MODE:                       PERHIST AUDIT BROWSE
--------------------------------------------------------------------------------
NAME                                                        SSN


      DTLNASATTL

      DTLOPMTTL

      DTYSTNNAME

      LOCALTTL

      NASATTL

      OPMTTL

--------------------------------------------------------------------------------
 PF1= HELP                     PF3= PREV SCREEN                PF5= MAIN MENU
 PF6= END ACTION               PF11= GO TO                     PF12= END
```

Perhist Audit Browse (Page 3)

```
NEMD000D                          NPPS                    4 OF 11
MODE:                       PERHIST AUDIT BROWSE
--------------------------------------------------------------------------------
NAME                                                        SSN

DTYSTN                      FLSA                      FROZENCSRS   0
DTYSTS                      FOLLOW1                   FSCDTE       0
EDLEV                       FOLLOW2                   FTELI
EMPIND                      FOLLOW3                   FUNCCLASS
EMPNO                       FOLLOW4                   FURNTEDTE    0
EODDTE        0             FOLLOW5                   GRADE        0
FACILITY                    FOLLOW6                   GRADERETN
FEGLI                       FOLLOW7                   HANDICAP
FEHB                        FOLLOW8                   HEAD-AGENCY
FEHBFULLPLAY                FOUFLD                    HIFLD
FERSCOVER                   FOULEV                    HIGRADE
FINSTM                      FOUSCH                    HILEV
FINSTMDTE     0             FOUYR                     HIPAYPLN
--------------------------------------------------------------------------------
 PF1= HELP                     PF3= PREV SCREEN                PF5= MAIN MENU
 PF6= END ACTION               PF11= GO TO                     PF12= END
```

Perhist Audit Browse (Page 4)

```
NEMD000E                          NPPS                    5 OF 11
MODE:                       PERHIST AUDIT BROWSE
--------------------------------------------------------------------------------
NAME                                                        SSN

HISCH                      NCC                         PAYPLN
HIYR                       NEWSUPBEGDTE   0            PAYPLNRETN
HRLIMIT        0           NEWSUPENDDTE   0            PAYTABLE
INSTALL                    NEXTWIGDTE     0            PDN
LASTPROMODTE   0           NNASAAPPRO                                  0
LEQDTE         0           NNSAAPROJLI                 PEFRATC
LVENTITLE                  NSCDTE         0            PEFRATCYR     0
LWOPNTEDTE     0           NSPI                        PEFRATP1
LWPNTEDTE      0           OCCODE                      PEFRATP1YR    0
MINCDE                     ORGASSIGN                   PEFRATP2
NAMEFIRST                  ORGLOC                      PEFRATP2YR
NAMEGENSUFX                PAYBASIS                    POSCHGNTEDTE  0
NAMELAST                                               POSCRIT
--------------------------------------------------------------------------------
 PF1= HELP                     PF3= PREV SCREEN                PF5= MAIN MENU
 PF6= END ACTION               PF11= GO TO                     PF12= END
```

Perhist Audit Browse (Page 5)

```
NEMD000F                          NPPS                    6 OF 11
MODE:                       PERHIST AUDIT BROWSE
--------------------------------------------------------------------------------
NAME                                                        SSN

POSOCC                      RMPAYSTAT               SALANN      0.00
POSTYPE                     RMRETIRBASIS            SALDAILY    0.00
POSTYPELOC                  RMRETIRDTE     0        SALHOURLY   0.00
PRD                         RMSVCCOMP               SECFLD
PRIORRETCOV                 RMSVCDESIG              SECLEV
PROBENDDTE    0             RMSVCNUM                SECSCH
PROJPROMO                   RMSVCPAYGRD             SECYR
PROMONTEDTE   0             RRBRANCH                SES PROB    0
PTHOURS                     RRRANK                  SEX  RETDISDTE     0
RSCDTE         0         STEP
RETENEXPDTE   0             RTD                     STEPRETN
RETOPTDTE     0             RTDGROUP                SUPIND
RETPLAN                     SABBNTEDTE     0        SUSPNTEDTE  0
--------------------------------------------------------------------------------
 PF1= HELP                     PF3= PREV SCREEN                PF5= MAIN MENU
 PF6= END ACTION               PF11= GO TO                     PF12= END
```

Perhist Audit Browse (Page 6)

```
NEMD000G                          NPPS                    7 OF 11
MODE:                       PERHIST AUDIT BROWSE
--------------------------------------------------------------------------------
NAME                                                        SSN


TENURE                        TSPSEPDTE      0           HIGPA    0.00
TENUREBEGDTE   0              TSPSTATUS                  SECGPA   0.00
TENUREENDDTE   0              TSPSTATUSDTE   0           THRGPA   0.00
THRFLD                        TSPVEST
THRLEV                        UNIONBU
THRSCH                        VETPREF
THRYR                         VETPREFRIF
TITLECDE                      VETSTATUS
TRAINDEVPGM                   WIGWENDDTE     0
TSPELIGDTE     0              WORKSCH
TSPSCDTE       0              COOPGPA        0.00
TSPSEPCODE                    FOUGPA         0.00
--------------------------------------------------------------------------------
 PF1= HELP                     PF3= PREV SCREEN                PF5= MAIN MENU
 PF6= END ACTION               PF11= GO TO                     PF12= END
```

Perhist Audit Browse (Page 7)

```
NEMD000H                          NPPS                    8 OF 11
MODE:                       PERHIST AUDIT BROWSE
--------------------------------------------------------------------------------
NAME                                                      SSN


        ORGALEVEL1

        ORGALEVEL2

        ORGALEVEL3

        ORGALEVEL4

  AWARD-GROUP-TEXT



--------------------------------------------------------------------------------
 PF1= HELP                     PF3= PREV SCREEN                PF5= MAIN MENU
 PF6= END ACTION               PF11= GO TO                     PF12= END
```

Perhist Audit Browse (Page 8)

```
NEMD000I                          NPPS                    9 OF 11
MODE:                       PERHIST AUDIT BROWSE
--------------------------------------------------------------------------------
NAME                                                      SSN

EMPL-ADJSTD-BASIC-PAY-AMT     0.00    RETENTION ALLOW               0.00
EMPL-AUO-ANL-AMT              0       EMPL-RTNTN-ALWNC-NTE-DATE     0
EMPL-AUO-PCT                  0       EMPL-RTNTN-ALWNC-PCT          0
EMPL-BASIC-PAY-AMT            0.00    SUPER-DIFF                    0.00
EMPL-BONUS-DFRNTL-BASIS-CODE          EMPL-SPRVSR-DFRNTL-PCT        0
EMPL-BONUS-RCRTMNT-AMT        0       EMPL-SRVC-AGRMNT-END-DATE     0
EMPL-BONUS-RCRTMNT-PCT        0       EMPL-STFNG-DFRNTL-ANL-AMT     0
EMPL-BONUS-RLCTN-AMT          0       EMPL-STFNG-DFRNTL-PCT         0
EMPL-BONUS-RLCTN-PCT          0       EMPL-TOT-PAY-AMT              0.00
EMPL-FRGN-LNG-ANL-AMT         0       EMPL-TIME-OFF-AWARD-HRS       0.0
EMPL-LCLTY-ADJSTMNT-ANL-AMT   0       EMPL-PRFRMNCE-RTNG-YEAR3-CODE 0
EMPL-LCLTY-ADJSTMNT-IND               EMPL-PRFRMNCE-RTNG-YEAR3-YEAR
EMPL-OTHR-PAY-AMT             0
--------------------------------------------------------------------------------
 PF1= HELP                     PF3= PREV SCREEN                PF5= MAIN MENU
 PF6= END ACTION               PF11= GO TO                     PF12= END
```

Perhist Audit Browse (Page 9)

```
NEMD000J                          NPPS                    10 OF 11
MODE:                       PERHIST AUDIT BROWSE
--------------------------------------------------------------------------------
NAME                                                        SSN

EMPL-SCH-BASIC-PAY-AMT       0.00         EMPL-AVLBLTY-PAY-ANL-AMT
EMPL-SCH-ADJST-BASIC-PAY-AMT              EMPL-SCHDL-LCLTY-ANL-AMT
EMPL-RDCTN-IN-FRC-NTE-DATE   0            EMPL-SCHDL-TOT-PAY-AMT
EMPL-LCTD-INSTLTN-CODE                    GRADE-RESET-CODE
EMPL-CRNT-RTNG-EFCTV-DATE    0            DLT-GRADE-RESET-CODE
EMPL-PRIOR1-RTNG-EFCTV-DATE  0            HIGRADE-RESET-CODE
EMPL-PRIOR2-RTNG-EFCTV-DATE  0            PEFRATC-RESET-CODE
EMPL-PRIOR3-RTNG-EFCTV-DATE  0            PEFRATP1-RESET-CODE
EMPL-SRVC-CMPTN-RTRMNT-DATE  0            PEFRATP2-RESET-CODE
EMPL-AWARD-BDGT-CODE                      EMPL-PRFMNC-RTNG-YR3-FLAG
EMPL-FERS-MRA-DATE           0            EMPL-TOA-HRS-YTD-RESET-CODE
EMPL-ARMY-LINE-NMBR-CODE
EMPL-ARMY-PRGRPH-CODE
--------------------------------------------------------------------------------
 PF1= HELP                     PF3= PREV SCREEN                PF5= MAIN MENU
 PF6= END ACTION               PF11= GO TO                     PF12= END
```

Perhist Audit Browse (Page 10)

```
NEMD000J                          NPPS                    11 OF 11
MODE:                       PERHIST AUDIT BROWSE
--------------------------------------------------------------------------------
NAME                                                        SSN

EMPL-CRNT-RTNG-PTRN-CODE
EMPL-PRIOR1-RTNG-PTRN-CODE
EMPL-PRIOR2-RTNG-PTRN-CODE
EMPL-PRIOR3-RTNG-PTRN-CODE
CRNT-PTRN-RESET-CODE
PRIOR1-PTRN-RESET-CODE
PRIOR2-PTRN-RESET-CODE
PRIOR3-PTRN-RESET-CODE









--------------------------------------------------------------------------------
 PF1= HELP                     PF3= PREV SCREEN                PF5= MAIN MENU
 PF6= END ACTION               PF11= GO TO                     PF12= END
```

Perhist Audit Browse (Page 11)

4.2 Payroll

```
COMMAND: ________                N P P S
NAO0000                   PAYROLL MAIN MENU - MMPAY
 ---------------------------------------------------------------------------
                   CENTER ID:        NPPS VERSION:

                   ENTER ONE OF THE FOLLOWING SELECTIONS: _


                           1 - TIME & ATTENDANCE

                           2 - MER

                           3 - TABLE PROCESSING

                           4 - VOUCHERING

                           5 - NON-PERSONNEL ACTION CASH AWARDS

 ---------------------------------------------------------------------------
  PF1= HELP                  PF5= MAIN MENU                    PF12= END
```

Payroll Main Menu (MMPAY)

DESCRIPTION AND EXECUTION

The Payroll Main Menu (MMPAY) displays the five main components of the Payroll subsystem of NPPS. This subsystem provides the capability to process payroll employee actions and to compute employee pay. These components are grouped into three logical sections for payroll processes: Payroll Actions (MER), Payroll Computations (Time and Attendance and Vouchering), Payroll Table Processing, and Non-personnel Action Cash Award.

4.2.1 Description and Execution - CPO Center

```
COMMAND: ________                N P P S
NAO0000                  PAYROLL MAIN MENU - MMPAY
 ------------------------------------------------------------------------------
                  CENTER ID:        NPPS VERSION:

                  ENTER ONE OF THE FOLLOWING SELECTIONS: _


                         1 - TIME & ATTENDANCE

                         2 - MER

                         3 - TABLE PROCESSING

                         4 - VOUCHERING

                         5 - NON-PERSONNEL ACTION CASH AWARDS

 ------------------------------------------------------------------------------
  PF1= HELP                  PF5= MAIN MENU                    PF12= END
```

Payroll Main Menu (MMPAY)

When the Payroll Main Menu (MMPAY) is accessed using the CPO USER-ID, CENTER-ID is an open field. The CPO User can switch from one Center to another on this screen by inputting the CENTER-ID. When the cursor is put on the CENTER-ID field and PF1 is used, a window is displayed with a pick list of Centers from NPPS Core Table TINSTAL1.

```
COMMAND: ________                N P P S
NAO0000                  PAYROLL MAIN MENU - MMPAY
-----------------------------------------------------------------------
                  CENTER ID
                  ENTER ONE
                      -------------------------------
                      |ENTER THE NUMBER OF THE SITE |
                      |    YOU WISH TO ACCESS       |
                    1 |        1  1000              |
                    2 |        2  2100              |
                    3 |        3  2200              |
                    4 |        4  2300              |
                    5 |        5  2400              |
                    6 |        6  5100              |
                    7 |        7  6200              |
                    8 |        8  6400              |
                    9 |        9  7200              |
                   10 |       10  7600              |
----------------------|            __ SELECTION     |---------- ----
 PF1= HELP            -------------------------------           12= END
```

<u>Step to Reach Payroll Main Menu</u>

1. At the Main Menu, select **2** - Payroll.

4.2.2 Payroll Actions (MER) Menu

```
COMMAND: ________                    NPPS
NAO1000           MASTER EMPLOYEE RECORD DATA ENTRY MENU - MMER                2
 ---------------------------------------------------------------------------


                  ENTER ONE OF THE FOLLOWING SELECTIONS: _


                       1 - MASTER SELECTION MER MENU
                       2 - EMPLOYEE LOCATION MENU
                       3 - CURRENT PP PAY ACTIONS MENU
                       4 - LEAVE HOURS ADJUSTMENTS MENU
                       5 - DOLLAR ACCUMULATIONS ADJUSTMENTS MENU
                       6 - MER CONTROLS AND QUERIES MENU
                       7 - PAYROLL SUSPENSE MAINTENANCE QUERY
                       8 - MASS AND GLOBAL TRANSACTIONS MENU
                       9 - START NEW EMPLOYEE ADD CHAIN


 ---------------------------------------------------------------------------
  PF1= HELP          PF3= PREV SCREEN   PF5= MAIN MENU        PF12= END
```

Master Employee Record Data Entry Menu (MMER)

DESCRIPTION AND EXECUTION

The Master Employee Record Data Entry Menu (MMER) is used to select other submenus in order to navigate to the required payroll actions template. For the remainder of the Payroll Actions (MER) section of the UOG, the first option from this menu, Master Selection MER Menu, will be discussed. This menu lists all 60 possible payroll actions on three screens. For further reference, the Master Selection MER Menu screens are displayed on proceeding pages.

<u>Steps to Reach the Master Employee Record Data Entry Menu</u>

1. At the Main Menu, select **2** - Payroll.
2. At the Payroll Main Menu, select **2** - MER.

```
COMMAND: ________                  NPPS
NAO1001          MASTER SELECTION MER MENU - MSTM       1 OF 3
--------------------------------------------------------------------------------
                  ENTER ONE OF THE FOLLOWING SELECTIONS: __

      DEDUCTIONS                                PAY AND DEDUCTIONS ADJUSTMENTS
 1  - VOLUNTARY SAVINGS ALLOTMENTS        14 - EARNINGS AND REFUNDS ADJ
 2  - TSP LOAN REPAYMENT ALLOTMENTS       15 - COLA & FOREIGN DIFFERENTIAL
 3  - BOND DEDUCTIONS                     16 - CURRENT TSP ADJUSTMENTS
 4  - NEBA LIFE INSURANCE                 17 - EMPLOYEE INSURANCE ADJUSTMENTS
 5  - MILITARY DEPOSIT DEDUCTIONS         18 - OTHER DEDUCTIONS ADJUSTMENTS
 6  - MISCELLANEOUS VOLUNTARY DEDUCTIONS  19 - LUMP SUM LEAVE/REACTIVATIONS
 7  - THRIFT SAVINGS PLAN                 20 - PCS TRAVEL ADJUSTMENT B/W
 8  - FEDERAL & STATE TAXES
 9  - CITY & COUNTY TAXES                      LEAVE ADJUSTMENTS
 10 - BANKRUPTCY PAYMENTS                 21 - ANNUAL LEAVE
 11 - INDEBTEDNESS TO U.S.                22 - COMPENSATORY TIME
 12 - CHILD SUPPORT PAYMENTS              23 - RELIGIOUS COMP TIME
 13 - COMMERCIAL GARNISHMENTS             24 - CREDIT HOURS            (CONT.)
--------------------------------------------------------------------------------
 PF1= HELP          PF3= PREV SCREEN   PF5= MAIN MENU        PF7= BACKWARD
 PF8= FORWARD       PF12= END
```

Master Selection MER Menu (Page 1)

```
COMMAND: ________                  NPPS
NAO1001          MASTER SELECTION MER MENU - MSTM       2 OF 3
--------------------------------------------------------------------------------
                  ENTER ONE OF THE FOLLOWING SELECTIONS: __

 25 - LEAVE WITHOUT PAY HOURS             36 - YTD EARNINGS & PREM HRS WORKED
 26 - RESTORED LEAVE                      37 - YTD LEAVE COST
 27 - SICK LEAVE                          38 - YTD DEDUCTIONS
 28 - CONTINUATION OF PAY LEAVE           39 - YTD RETIREMENT ADJUSTMENTS
 29 - DONATED ANNUAL LEAVE                40 - YTD DEDUCTIONS TSP
 30 - HOME LEAVE                          41 - APPOINTMENT LIMITATIONS
 31 - OTHER LEAVE USED YTD                42 - TRANSFER IN DATA
 32 - TIME OFF AWARDS
 33 - EXTENDED COMPENSATORY TIME               QUERY
                                          43 - SAVINGS ALLOTMENT SUMMARY
      YTD                                 44 - OLD VERSUS NEW NORMALS
 34 - FORMER STATE TAXES                  45 - PAY PERIOD YTD ADJUSTMNT
 35 - FORMER CITY & COUNTY TAXES          46 - BONDS CONTROL           (CONT.)
--------------------------------------------------------------------------------
 PF1= HELP          PF3= PREV SCREEN   PF5= MAIN MENU        PF7= BACKWARD
```

Master Selection MER Menu (Page 2)

```
COMMAND: ________                  NPPS
NAO1001          MASTER SELECTION MER MENU - MSTM       3 OF 3
--------------------------------------------------------------------------------
                  ENTER ONE OF THE FOLLOWING SELECTIONS: __

 47 - PAYROLL REGISTER ADJUSTMENTS             SUSPEND
 48 - PERSONNEL DATA                      58 - PAYROLL SUSPENSE MAINT QUERY
 49 - NEW EMPLOYEE LIST
 50 - TERMINATED EMPLOYEE LIST                 MASS
 51 - AWARDS CONTROL                      59 - CFC DEDUCTION MASS
 52 - TOUR OF DUTY NORMALS                60 - T & A DISTRIBUTION MASS
 53 - PAY PERIOD HISTORY QUERY            61 - NEW PAYBLOCK MASS UPDATE
 54 - PAY PERIOD HISTORY                  62 - DONATED LEAVE MASS
                                          63 - GLOBAL TRANSACTIONS, FIN INST
      MISCELLANEOUS                       64 - GLOBAL TRANSACTIONS, TA DIST CDE
 55 - EMPLOYEE T & A DISTRIBUTION         65 - MASS AWARD PROCESSING
 56 - EMP MAILING ADDRESS & NET PAY       66 - MASS EXTENDED COMPENSATORY TIME
 57 - SPOUSAL HEALTH BENEFITS
--------------------------------------------------------------------------------
 PF1= HELP          PF3= PREV SCREEN   PF5= MAIN MENU        PF7= BACKWARD
 PF8= FORWARD       PF12= END
```

Master Selection MER Menu (Page 3)

Throughout the Payroll Actions section, special sets of functions and PF keys are available. Though not every function and PF key appears on all screens, the complete sets are listed below so that you may become familiar with them.

<u>Use of Functions</u>

A=Add Chain	Allows you to add information about a new employee through a series of temporarily linked screens. The linkage ceases to exist when you change the Add function to any other function.
C=Change	Allows you to change information about an existing employee.
N=Name Search	Allows you to enter an employee's name or partial name and retrieve the SSN. If more than one employee satisfies the name search, a listing of all employees with that name will be displayed on the screen. You may then select the specified employee, and NPPS will enter the SSN on the screen so that you may continue as if you had entered the SSN yourself.
R=Retrieve	Allows you to retrieve information from an existing employee's master record so that you may view the information on the screen. Data must be retrieved before it can be changed.

S=Suspend	Allows you to enter information for an existing employee in advance of the date when you want the information to become part of the master employee record. This information is temporarily placed in the suspense file and will be applied to the employee's record when matured. This date is referred to as the Effective Date. The Effective Date is usually the first day of the pay period in which the action should be applied.
X=Cancel	Allows you to place an “X” in the Cancel field to cancel information pertaining to an existing employee.

Use of PF Keys

The four standard PF keys which appear on most menus and templates are PF1=Help, PF3= Previous Screen, PF5=Main Menu, and PF12=End. Two additional keys which allow you to move between the pages of a template that is composed of more than one screen are PF7=Backward and PF8=Forward.

Four additional keys allow you to query display screens so that you can confirm the results of your payroll actions. These four PF keys are PF2=QALLOT (Savings Allotment Summary), PF4=QNORM (Old vs. New Normals), PF6=QYTDADJ (Pay Period YTD Adjustments), and PF9=QREG (Payroll Register).

Description of Data Processing Results and Output

Most payroll actions result in control reports for normals controls, gross-to-net controls, YTD controls, or allotment controls as well as employee record updates and transaction history updates.

4.2.2.1 Deductions

NPPS provides the capability to maintain the employee information necessary to compute the following voluntary and mandatory biweekly deductions from gross earnings.

Voluntary Deductions

- Voluntary Savings Allotments
- TSP Loan Repayment Allotments
- Bond Deductions
- NEBA Life Insurance
- Military Deposit Deductions
- Miscellaneous Voluntary Deductions
- TSP Deductions

Mandatory Deductions

- Federal and State Taxes
- City Taxes
- Bankruptcy Payment
- Indebtedness to the US Government
- Child Support Payments
- Commercial Garnishments

4.2.2.1.1 Voluntary Savings Allotments

```
 *   SPECIFY SSN OR FUNCTION = N 'NAME SEARCH'

COMMAND: ________                    NPPS
NAO1231              VOLUNTARY SAVINGS ALLOTMENTS - ALLOT
 ---------------------------------------------------------------------------
      SSN      PAYBLK    FUNC    LAST NAME                  FIRST NAME      I
  ___ __ ____              R     ________________________   ____________    _
                                                                ACCT    ENTER X
                 ROUTING#           ACCOUNT#           AMOUNT   TYPE   TO CANCEL
   ALLOTMENT 1   _________       ________________     _____      _        _
         FIN. INST. NAME:
 ADDRESS:
 CITY:                                      STATE:       ZIP:
                                                                ACCT
                 ROUTING#           ACCOUNT#           AMOUNT   TYPE
   ALLOTMENT 2   _________       ________________     _____      _        _
         FIN. INST. NAME:
 ADDRESS:
 CITY:                                      STATE:       ZIP:
 ---------------------------------------------------------------------------
 FUNCTIONS: A= ADD CHN   C= CHANGE   N= NAME SEARCH   R= RETRIEVE   S= SUSPEND
  PF1= HELP          PF2= QALLOT          PF3= PREV SCREEN     PF4= QNORM
  PF5= MAIN MENU     PF9= QREG            PF12= END
```

Voluntary Savings Allotments (ALLOT)

DESCRIPTION AND EXECUTION

The Voluntary Savings Allotments (ALLOT) template is used to set up and maintain employee deductions for two separate savings allotments.

<u>Steps to Reach Voluntary Saving Allotments</u>

1. At the Main Menu, select **2** - Payroll.
2. At the Payroll Main Menu, select **2** - MER.
3. At the Master Employee Record Data Entry Menu, select **1** - Master Selection MER Menu.
4. At the Master Selection MER Menu, select **1** - Voluntary Savings Allotments.

4.2.2.1.2 TSP Loan Repayment Allotments

```
COMMAND: ________                    NPPS
NAO1232             TSP LOAN REPAYMENT ALLOTMENTS - LOAN
-------------------------------------------------------------------------------

     SSN      PAYBLK   FUNC          LAST NAME                FIRST NAME    I
 ___ __ ____             _          ______________________  ____________  _

                                    LOAN 1                                TYPE
                                                                          X TO
 ROUTING#         ACCOUNT#             ALLOT AMT         ACCUM AMT       CANCEL
 _________     ________________      ________0.00             0.00        _

                                    LOAN 2

 ROUTING#         ACCOUNT#             ALLOT AMT         ACCUM AMT       CANCEL
 _________     ________________      ________0.00             0.00        _

-------------------------------------------------------------------------------
FUNCTIONS:  A= ADD CHN   C= CHANGE   N= NAME SEARCH   R= RETRIEVE   S= SUSPEND
 PF1= HELP          PF2= QALLOT          PF3= PREV SCREEN      PF4= QNORM
 PF5= MAIN MENU     PF9= QREG            PF12= END
```

TSP Loan Repayment Allotments (LOAN)

DESCRIPTION AND EXECUTION

The TSP Loan Repayment Allotments (LOAN) template is used to set up and maintain employee deductions for two separate allotments for TSP loan repayment. Loan deductions cease automatically when the accumulated amount equals the loan face amount, or when "X" is input into the Type X to Cancel field for each deduction.

<u>Steps to Reach TSP Loan Repayment Allotments</u>

1. At the Main Menu, select **2** - Payroll.
2. At the Payroll Main Menu, select **2** - MER.
3. At the Master Employee Record Data Entry Menu, select **1** - Master Selection MER Menu.
4. At the Master Selection MER Menu, select **2** - TSP Loan Repayment Allotments.

4.2.2.1.3 Bond Deductions

```
*   NO BOND DATA EXISTS FOR EMPLOYEE

COMMAND: ________                    NPPS
NAO1233                     BOND DEDUCTIONS - BOND
      SSN    PAYBLK  BOND#   FUNC     LAST NAME                FIRST NAME    I
  ___ __ ____   __      __      R      ______________________   ___________  _
           STATUS:            BOND TO BE PURCHASED:       BOND DATE: 0000
 DENOMINATION:  ____0        REQ DED: ___0.00     BALANCE:    0.00
 PURCHASE PRICE:    0.00     CUR DED:    0.00     REFUND:  ___0.00
   OWNER SSN / CODE ( OR, POD) - CO-OWNER BENEFICIARY:   (PURCHASE SEQUENCE)
       (1)            (2)            (3)            (4)            (5)
    _________      _________      _________      _________      _________
  ___ _________  ___ _________  ___ _________  ___ _________  ___ _________
       (6)            (7)            (8)            (9)            (10)
    _________      _________      _________      _________      _________
  ___ _________  ___ _________  ___ _________  ___ _________  ___ _________
 ------------------------------------------------------------------------------
 TOTAL #BONDS:   0       TOT REQ DED:     0.00    **** ALL BOND # ASSIGNED ****
 TOTAL #OWNERS:  0       TOT CUR DED:     0.00
 TOTAL BALANCE:    0.00  TOTAL REFUND:    0.00
 ------------------------------------------------------------------------------

 FUNC: A= ADD CHN  C= CHANGE  D= DELETE  N= NAME SEARCH  R= RETRIEVE  S= SUSPEND
  PF1= HELP           PF2= OWNERS        PF3= PREV SCREEN      PF4= QNORM
  PF5= MAIN MENU      PF9= QREG          PF12= END
```

Bond Deductions (BOND)

```
 COMMAND: ________                    NPPS
 NAO1233B                      BOND OWNERS - BOWN
 ------------------------------------------------------------------------------
 EMPLOYEE SSN:                    NAME:
 BOND OWNER SSN: 000 00 0000          FUNC: _      BOND:
 OWNER NAME:     ____________________________
 ADDRESS:        ____________________________________
                 ____________________________________
 CITY:           _________________   STATE: ___     ZIP: _____ - ____

 CO-OWNER/BEN CODE: ___
 NAME:               ____________________________        I.D.:  000 00 0000
 ------------------------------------------------------------------------------
     OWNER SSN   CODE   CO BEN I.D.           OWNER SSN   CODE   CO BEN I.D.




 ------------------------------------------------------------------------------
 FUNCTION:   A= ADD        C= CHANGE    D= DELETE    R= RETRIEVE    S= SUSPEND
  PF1= HELP    PF3= PREV SCREEN    PF7= BACKWARD    PF8= FORWARD    PF12= END
```

Bond Owners (BOWN)

DESCRIPTION AND EXECUTION

The Bond Deductions (BOND) template is used to set up and maintain a bond purchase program for an employee. Each employee may purchase up to ten bonds. The accompanying Bond Owners (BOWN) template allows for the input and display of complete information regarding the bond owner and co-owner for each bond purchased. You may enter a maximum of ten bonds. Each bond may be fixed or rotating. A fixed bond has only one owner. A rotating bond may have from two to ten owners, but the total number of bond owners the system can handle is limited to ten. A rotating bond is issued to each owner successively beginning with the first owner. The Refund field is used only when a bond deduction is terminating.

Steps to Reach Bond Deductions

1. At the Main Menu, select **2** - Payroll.
2. At the Payroll Main Menu, select **2** - MER.
3. At the Master Employee Record Data Entry Menu, select **1** - Master Selection MER Menu.
4. At the Master Selection MER Menu, select **3** - Bond Deductions.

Note: Bond Owners (BOWN) can only be reached by first accessing a record at the Bond Deductions template and then pressing PF2.

Bond processing allows you to add a bond (fixed or rotating), change the information for an existing bond, change the information for an existing owner/co-owner combination, delete a bond, and delete an inactive owner/co-owner combination. Each of these functions is illustrated in the following examples.

```
*   NO BOND OWNERS ESTABLISHED YET

   COMMAND: ________                    NPPS
   NAO1233                     BOND DEDUCTIONS - BOND
         SSN    PAYBLK  BOND#   FUNC     LAST NAME                FIRST NAME    I
     100 00 0056  01     1_      C        JONES_______             ERICK__       L
              STATUS:            BOND TO BE PURCHASED:       BOND DATE: 0000
    DENOMINATION:  100           REQ DED: __10.00     BALANCE:    0.00
    PURCHASE PRICE:    0.00      CUR DED:    0.00     REFUND:  ___0.00
      OWNER SSN / CODE ( OR, POD) - CO-OWNER BENEFICIARY:   (PURCHASE SEQUENCE)
          (1)             (2)             (3)             (4)             (5)
       100000056       _________       _________       _________       _________
     POD _________   ___ _________   ___ _________   ___ _________   ___ _________
          (6)             (7)             (8)             (9)             (10)
       _________       _________       _________       _________       _________
     ___ _________   ___ _________   ___ _________   ___ _________   ___ _________
    ------------------------------------------------------------------------------
    TOTAL #BONDS:   0       TOT REQ DED:     0.00    **** ALL BOND # ASSIGNED ****
    TOTAL #OWNERS:  0       TOT CUR DED:     0.00
    TOTAL BALANCE:    0.00  TOTAL REFUND:    0.00
    ------------------------------------------------------------------------------
    FUNC: A= ADD CHN  C= CHANGE  D= DELETE  N= NAME SEARCH  R= RETRIEVE  S= SUSPEND
     PF1= HELP           PF2= OWNERS        PF3= PREV SCREEN      PF4= QNORM
     PF5= MAIN MENU      PF9= QREG          PF12= END
```

Adding a Fixed Bond (Page 1)

Steps to Add a Fixed Bond

In the first example, a fixed bond was added for Erick Jones. Since Mr. Jones did not have any bonds established, this bond is bond number 1. Mr. Jones is the owner and his son, James, is the beneficiary. NPPS generated an ID for James which is part of the owner/beneficiary combination for this bond. The bond denomination is $100 and the required deduction is $10.00 per pay period.

1. Navigate to the bond template. Enter the SSN of the employee who wants to add a fixed bond and the bond number; you must choose a number which is not already assigned. Refer to the All Bond # Assigned area in order to view which bond numbers are already assigned. Press **ENTER**. NPPS will display the message, NO BOND OWNERS ESTABLISHED YET.

2. Change the FUNC to "C" for change. If you are adding the bond via the new employee add chain, you may leave the function as "A" for add chain. Enter the Denomination, Required Deduction, and owner SSN. If the employee has identified a co-owner or beneficiary, you must enter a code immediately below the owner SSN. The code for co-owner is "OR" and the code for beneficiary is "POD." Then you may enter the SSN of the co-owner beneficiary in the blank to the right of the co-owner beneficiary code. If you do not know the SSN of the co-owner beneficiary, you may generate your own installation-unique ID number (which should have at least three leading zeros so as not to be confused with a valid SSN) or you can leave this item blank. If you do not enter a co-owner beneficiary SSN or ID, NPPS generates an ID for you. You will view this system-generated ID when you proceed to the Bond Owner template. You must enter a deduction of at

least $3.75 and you must have at least one bond owner for each bond. Press **ENTER**.

```
 *  NEW BOND OWNER READY FOR ADD
 COMMAND: ________                    NPPS
 NAO1233                       BOND OWNERS - BOWN
-------------------------------------------------------------------------------
EMPLOYEE SSN: 100 00 0060       NAME: JONES                    ERICK        L
BOND OWNER SSN: 100 00 0056          FUNC: A      BOND:     1
OWNER NAME:     ERICK JONES_________________
ADDRESS:        1000 SEA HAWK LANE__________________
                _____________________________________
CITY:           WEBSTER________   STATE: TX_     ZIP: 77598 ____

CO-OWNER/BEN CODE: POD
NAME:              JAMES JONES_________________        I.D.:  000 00 0001
-------------------------------------------------------------------------------
    OWNER SSN   CODE   CO BEN I.D.           OWNER SSN   CODE   CO BEN I.D.




-------------------------------------------------------------------------------
FUNCTION:   A= ADD        C= CHANGE    D= DELETE    R= RETRIEVE    S= SUSPEND
 PF1= HELP  PF3= PREV  PF7= BKWD    PF8= FRWD    PF9= SCROLL ALL   PF12= END
```

Adding a Fixed Bond (Page 2)

3. NPPS displays the Bond Owner template with the message, NEW BOND OWNER READY TO ADD. Enter the owner name, street address, city, state, and zip. Also enter the name of the co-owner beneficiary if you indicated one on the Bond template. Note that the co-owner beneficiary code is automatically displayed by NPPS. In addition, NPPS automatically displays the SSN or ID you entered for the co-owner beneficiary. If you did not enter a SSN or ID, NPPS now displays the ID it automatically generated for you. Press **ENTER**. NPPS displays the new owner/co-owner beneficiary combination at the bottom of the screen and you receive the message, ALL CHANGES HAVE BEEN MADE....PRESS ENTER TO COMPLETE UPDATE.

```
COMMAND: ________                    NPPS
NAO9201                BOWN MULTIPLE MESSAGE DISPLAY



    SSN       PAYBLK     FUNC       LAST NAME                FIRST NAME    I
100 00 0056     01         R        JONES_________________   ERICK_____    L

*   PAYBLOCK 01 SSN 100-00-0056 CHANGED IN MASTER EMPLOYEE RECORD
*   NORMAL RECALCULATION HAS BEEN DONE









PF1= HELP         PF3= PREV SCREEN       PF5= MAIN MENU        PF7= BACKWARD
PF8= FORWARD      PF12= END
PF4= QNORM        PF9= QREG
```

Adding a Fixed Bond (Page 3)

4. NPPS displays the Bond Owner Multiple Message screen which states that the employees master record has been updated and the normal recalculations have been done. You may view the QNORM template in order to confirm that the recalculations have been performed. Press **PF3** if you want to view the Bond template.

```
COMMAND: ________                    NPPS
NAO1233                     BOND DEDUCTIONS - BOND
      SSN     PAYBLK  BOND#   FUNC     LAST NAME                FIRST NAME    I
  100 00 0056    01     1_      R      JONES_______             ERICK__       L
          STATUS:           BOND TO BE PURCHASED:       BOND DATE: 0000
 DENOMINATION:  100          REQ DED: __10.00     BALANCE:    0.00
 PURCHASE PRICE: 50.00       CUR DED:    0.00     REFUND:  ___0.00
   OWNER SSN / CODE ( OR, POD) - CO-OWNER BENEFICIARY:   (PURCHASE SEQUENCE)
       (1)             (2)             (3)             (4)             (5)
    100000056       _________       _________       _________       _________
  POD 000000001   ___ _________   ___ _________   ___ _________   ___ _________
       (6)             (7)             (8)             (9)             (10)
    _________       _________       _________       _________       _________
  ___ _________   ___ _________   ___ _________   ___ _________   ___ _________
 ---------------------------------------------------------------------------------
 TOTAL #BONDS:   1       TOT REQ DED:    10.00    **** ALL BOND # ASSIGNED ****
 TOTAL #OWNERS:  1       TOT CUR DED:     0.00      1
 TOTAL BALANCE:  0.00    TOTAL REFUND:    0.00
 ---------------------------------------------------------------------------------

 FUNC: A= ADD CHN  C= CHANGE  D= DELETE  N= NAME SEARCH  R= RETRIEVE  S= SUSPEND
  PF1= HELP           PF2= OWNERS        PF3= PREV SCREEN      PF4= QNORM
  PF5= MAIN MENU      PF9= QREG          PF12= END
```

Adding a Fixed Bond (Page 4)

5. The Bond template displays the newly added bond. NPPS automatically calculates the Purchase Price. Any co-owner beneficiary ID automatically generated by NPPS is displayed on the Bond template. In addition, the Total Number of Bonds, Total Required Deductions, Total Number of Owner/Co-owner Beneficiary combinations, and All Bond Number Assigned fields are updated.

Steps to Add a Rotating Bond

In the following example, a rotating bond was added for Erick Jones. Since Mr. Jones had a bond assigned the number 1, this bond is bond number 2. Mr. Jones is the owner and his three grandchildren are the co-owners. As a result, this bond has three owner/co-owner combinations. The bond denomination is $50 and the required deduction is $25.00 per pay period. Each pay period, one bond will be purchased for the owner/co-owner combination in the position marked as "1." During initialization, the owner/co-owner combination which received the bond for the prior pay period, will rotate to the end of the line and each additional owner/co-owner combination will move forward one position. The rotation does not occur until the owner/co-owner combination in position 1 receives a bond and the bond is not attached to a given owner/co-owner combination until it is purchased. Therefore, the outstanding balance of a cancelled bond always belongs to the employee.

```
 *   NO BOND OWNERS ESTABLISHED YET

COMMAND: ________                    NPPS
NAO1233                     BOND DEDUCTIONS - BOND
      SSN    PAYBLK  BOND#   FUNC     LAST NAME                FIRST NAME    I
  100 00 0056  01     2_      C        JONES_______             ERICK__      L
           STATUS:           BOND TO BE PURCHASED:       BOND DATE: 0000
 DENOMINATION:   50          REQ DED: __25.00     BALANCE:    0.00
 PURCHASE PRICE:    0.00     CUR DED:    0.00     REFUND:  ___0.00
   OWNER SSN / CODE ( OR, POD) - CO-OWNER BENEFICIARY:   (PURCHASE SEQUENCE)
       (1)             (2)             (3)             (4)             (5)
    100000056       100000056       100000056       _________       _________
  OR_ 100000100   OR_ 100000200    OR_ 100000300   ___ _________   ___ _________
       (6)             (7)             (8)             (9)             (10)
    _________       _________       _________       _________       _________
  ___ _________   ___ _________   ___ _________   ___ _________   ___ _________
 ------------------------------------------------------------------------------
 TOTAL #BONDS:   1       TOT REQ DED:    10.00    **** ALL BOND # ASSIGNED ****
 TOTAL #OWNERS:  1       TOT CUR DED:     0.00      1
 TOTAL BALANCE:    0.00  TOTAL REFUND:    0.00
 ------------------------------------------------------------------------------
 FUNC: A= ADD CHN  C= CHANGE  D= DELETE  N= NAME SEARCH  R= RETRIEVE  S= SUSPEND
  PF1= HELP           PF2= OWNERS        PF3= PREV SCREEN      PF4= QNORM
  PF5= MAIN MENU      PF9= QREG          PF12= END
```

Adding a Rotating Bond (Page 1)

1. Navigate to the bond template. Enter the SSN of the employee and the bond number. Press **ENTER**. NPPS will display the message, NO BOND OWNERS ESTABLISHED YET.

2. Change the FUNC to "C." If you are adding the bond via the new employee add chain, you may leave the function as "A" for add chain. Enter the Denomination, Required Deduction, and owner SSN for each owner/co-owner beneficiary combination. If the employee has identified a co-owner or beneficiary for one or more of the owner(s), you must enter a code immediately below the corresponding owner SSN. The code for co-owner is "OR" and the code for beneficiary is "POD." Then enter the SSN of the co-

owner beneficiary in the blank to the right of the co-owner beneficiary code. (For further details, see Steps to Adding a Fixed Bond.) You must enter a deduction of at least $3.75 and you must have at least one bond owner for each bond. Press **ENTER**.

```
 * ADDRESS FOR OWNER 100000056 HAS BEEN ADDED
  *  ALL CHANGES HAVE BEEN MADE....PRESS ENTER TO COMPLETE UPDATE
  COMMAND: ________                  NPPS
NAO1233                      BOND OWNERS - BOWN
 ------------------------------------------------------------------------------
 EMPLOYEE SSN: 100 00 0056       NAME: JONES                    ERICK        L
 BOND OWNER SSN: 100 00 0056          FUNC: A      BOND:     2
 OWNER NAME:     ERICK JONES_________________
 ADDRESS:        1000 SEA HAWK LANE__________________
                 ____________________________________
 CITY:           WEBSTER________   STATE: TX_     ZIP: 77598 ____

 CO-OWNER/BEN CODE: OR_
 NAME:              JANE JONES_________________        I.D.:  100 00 0300
 ------------------------------------------------------------------------------
     OWNER SSN   CODE   CO BEN I.D.           OWNER SSN   CODE   CO BEN I.D.
    100-00-0056   POD   000-00-0001          100-00-0056   OR    100-00-0100
    100-00-0056   OR    100-00-0200          100-00-0056   OR    100-00-0300



 ------------------------------------------------------------------------------
 FUNCTION:   A= ADD        C= CHANGE    D= DELETE    R= RETRIEVE    S= SUSPEND
  PF1= HELP  PF3= PREV  PF7= BKWD    PF8= FRWD    PF9= SCROLL ALL   PF12= END
```

Adding a Rotating Bond (Page 2)

3. NPPS displays the Bond Owner template for the owner/co-owner combination you enter in position one. Enter the owner name, street address, city, state, and zip. Also enter the name of the co-owner beneficiary if you indicated one on the Bond template. Note that the co-owner beneficiary code is automatically displayed by NPPS. In addition, NPPS automatically displays the SSN or ID you entered for the co-owner beneficiary. Press **ENTER**. NPPS automatically displays the next owner/co-owner combination you specified and you must supply the same types of information you provided for the first owner co-owner combination. The process continues until you have provided the required information for all the owner/co-owner combinations identified on the Bond template. As each new combination is added, NPPS displays the new owner/co-owner beneficiary combination at the bottom of the screen. After the data for each owner co-owner combination is entered, the message ALL CHANGES HAVE BEEN MADE....PRESS ENTER TO COMLETE UPDATES will be displayed. When the data for the last owner co-owner combination has been made, the updates will be completed.

```
COMMAND: ________                    NPPS
NAO9201                BOWN MULTIPLE MESSAGE DISPLAY



    SSN       PAYBLK     FUNC       LAST NAME                FIRST NAME    I
100 00 0056     01         R        JONES_________________   ERICK_____    L

*   PAYBLOCK 01 SSN 100-00-0056 CHANGED IN MASTER EMPLOYEE RECORD
*   NORMAL RECALCULATION HAS BEEN DONE









PF1= HELP         PF3= PREV SCREEN       PF5= MAIN MENU        PF7= BACKWARD
PF8= FORWARD      PF12= END
PF4= QNORM        PF9= QREG
```

Adding a Rotating Bond (Page 3)

4. NPPS displays the Bond Owner Multiple Message screen which states that the employees master record has been updated and the norm recalculations have been done. You may view the QNORM template in order to confirm that the recalculations have been performed. Press **PF3** if you want to view the Bond template.

```
COMMAND: ________                    NPPS
NAO1233                     BOND DEDUCTIONS - BOND
      SSN     PAYBLK  BOND#   FUNC     LAST NAME                FIRST NAME    I
  100 00 0056    01     2_      C        JONES_______           ERICK__     L
           STATUS:           BOND TO BE PURCHASED:       BOND DATE: 0000
 DENOMINATION:   50          REQ DED: __25.00     BALANCE:    0.00
 PURCHASE PRICE:  25.00      CUR DED:    0.00     REFUND:  ___0.00
   OWNER SSN / CODE ( OR, POD) - CO-OWNER BENEFICIARY:   (PURCHASE SEQUENCE)
       (1)             (2)             (3)             (4)             (5)
    100000056       100000056       100000056       _________       _________
  OR_ 100000100   OR_ 100000200    OR_ 100000300   ___ _________   ___ _________
       (6)             (7)             (8)             (9)             (10)
    _________       _________       _________       _________       _________
  ___ _________   ___ _________   ___ _________   ___ _________   ___ _________
 ------------------------------------------------------------------------------
 TOTAL #BONDS:   0       TOT REQ DED:    35.00    **** ALL BOND # ASSIGNED ****
 TOTAL #OWNERS:  4       TOT CUR DED:     0.00      1  2
 TOTAL BALANCE:  0.00    TOTAL REFUND:    0.00
 ------------------------------------------------------------------------------

 FUNC: A= ADD CHN  C= CHANGE  D= DELETE  N= NAME SEARCH  R= RETRIEVE  S= SUSPEND
  PF1= HELP           PF2= OWNERS        PF3= PREV SCREEN      PF4= QNORM
  PF5= MAIN MENU      PF9= QREG          PF12= END
```

Adding a Rotating Bond (Page 4)

5. The Bond template displays the newly added bond. NPPS automatically calculates the Purchase Price. Any co-owner beneficiary IDs automatically generated by NPPS are displayed on the Bond template. In addition, the Total Number of Bonds, Total Required Deductions, Total Number of Owner/Co-owner Beneficiary combinations, and All Bond Numbers Assigned fields are updated.

BOND UPDATES WHICH NPPS PERFORMS DURING T&A PROCESSING

When Mr. Jones' T&A is processed, NPPS updates the Bond template to indicate that he now has a Total Current Bond Deduction of $35.00 with an Total Balance of $10.00. The $25.00 difference is applied to the purchase of one number 2 bond for the first owner/co-owner combination.

```
COMMAND: ________                    NPPS
NAO1233                    BOND DEDUCTIONS - BOND
      SSN     PAYBLK  BOND#   FUNC     LAST NAME                FIRST NAME    I
  100 00 0056    01     2_      R        JONES_______            ERICK__       L
           STATUS:           BOND TO BE PURCHASED: YES   BOND DATE: 1289
 DENOMINATION:   50          REQ DED: __25.00     BALANCE:    0.00
 PURCHASE PRICE:  25.00      CUR DED:   25.00     REFUND:  ___0.00
   OWNER SSN / CODE ( OR, POD) - CO-OWNER BENEFICIARY:   (PURCHASE SEQUENCE)
       (1)             (2)             (3)             (4)             (5)
    100000056       100000056       100000056       _________       _________
  OR_ 100000100   OR_ 100000200    OR_ 100000300   ___ _________   ___ _________
       (6)             (7)             (8)             (9)             (10)
    _________       _________       _________       _________       _________
  ___ _________   ___ _________   ___ _________   ___ _________   ___ _________
 ------------------------------------------------------------------------------
 TOTAL #BONDS:   0       TOT REQ DED:    35.00    **** ALL BOND # ASSIGNED ****
 TOTAL #OWNERS:  4       TOT CUR DED:    35.00      1  2
 TOTAL BALANCE: 10.00    TOTAL REFUND:    0.00
 ------------------------------------------------------------------------------
 FUNC: A= ADD CHN  C= CHANGE  D= DELETE  N= NAME SEARCH  R= RETRIEVE  S= SUSPEND
  PF1= HELP           PF2= OWNERS        PF3= PREV SCREEN      PF4= QNORM
  PF5= MAIN MENU      PF9= QREG          PF12= END
```

Bond Updates and Purchases

1. After you enter the T&A for each employee, NPPS reviews all the bonds in order to calculate the Total Current Bond Deduction for the pay period. This total should be identical to the Total Required Bond Deduction. The only exception occurs when NPPS finds that the employee's total pay amount is less than the Total Required Bond Deduction. In this case, NPPS sets the Total Current Bond Deduction to zero and does not make any bond deduction for the current pay period. In addition, NPPS updates the Total Balance for all outstanding bond deductions waiting to be applied to the future purchase of a bond.
2. When the T&A for each employee is entered, NPPS looks at the purchase price of each bond and decides whether the bond balance is 50 percent or more of the purchase price. If the balance is 50 percent or more of the purchase price, NPPS assigned the current month and year to the bond in the Bond Date field.
3. When the T&A for each employee is entered, NPPS looks at the purchase price of each bond and decides whether a bond is to be purchase based on the required deduction and/or the bond balance amount. If a bond should be purchased, NPPS enters "Yes" in the Bond To Be Purchased field.

BOND ROTATION

During initialization, the second owner/co-owner combination for Mr. Jones' number 2 bond moves into the first position. Likewise, the third combination moves into position number two. The combination that received the bond purchase in the previous pay period moves into the third and final position. The rotation will continue in this manner until Mr. Jones chooses to change or delete this bond.

```
COMMAND: ________                    NPPS
NAO1233                     BOND DEDUCTIONS - BOND
      SSN     PAYBLK  BOND#   FUNC     LAST NAME                FIRST NAME    I
  100 00 0056    01     2_      R        JONES_______           ERICK__       L
           STATUS:           BOND TO BE PURCHASED:       BOND DATE: 0000
 DENOMINATION:   50          REQ DED: __25.00     BALANCE:    0.00
 PURCHASE PRICE:  25.00      CUR DED:    0.00     REFUND:  ___0.00
   OWNER SSN / CODE ( OR, POD) - CO-OWNER BENEFICIARY:   (PURCHASE SEQUENCE)
       (1)            (2)            (3)            (4)            (5)
    100000056       100000056       100000056       _________       _________
  OR_ 100000200   OR_ 100000300    OR_ 100000100   ___ _________   ___ _________
       (6)            (7)            (8)            (9)            (10)
    _________       _________       _________       _________       _________
  ___ _________   ___ _________   ___ _________   ___ _________   ___ _________
 ------------------------------------------------------------------------------

 TOTAL #BONDS:   2       TOT REQ DED:    35.00    **** ALL BOND # ASSIGNED ****
 TOTAL #OWNERS:  4       TOT CUR DED:     0.00      1  2
 TOTAL BALANCE: 10.00    TOTAL REFUND:    0.00
 ------------------------------------------------------------------------------
 FUNC: A= ADD CHN  C= CHANGE  D= DELETE  N= NAME SEARCH  R= RETRIEVE  S= SUSPEND
  PF1= HELP           PF2= OWNERS        PF3= PREV SCREEN      PF4= QNORM
  PF5= MAIN MENU      PF9= QREG          PF12= END
```

Bond Rotation

During initialization, NPPS looks at each rotating bond and determines whether or not a bond was purchased during the prior pay period. If the owner/co-owner combination in the first position did receive a bond, this combination rotates to the end of the line and each additional owner/co-owner combination will move forward one position. The rotation does not occur until the owner/co-owner combination in position number 1 receives a bond and the bond is not attached to a given owner/co-owner combination until it is purchased. Therefore, the outstanding balance of a canceled bond always belongs to the employee.

STEPS TO CHANGE A BOND

In the following example, Mr. Jones decides to increase the Required Deduction for bond number 1. The original deduction was $10.00 and he wants the deduction to increase to $20.00 per pay period. As a result of this change, Mr. Jones' Total Required Bond Deduction (per pay period) becomes $45.00.

```
COMMAND: ________                    NPPS
NAO1233                     BOND DEDUCTIONS - BOND
      SSN     PAYBLK  BOND#   FUNC     LAST NAME                FIRST NAME    I
  100 00 0056    01     1_      C        JONES_______            ERICK__       L
           STATUS:           BOND TO BE PURCHASED:       BOND DATE: 0000
 DENOMINATION:  100          REQ DED: __20.00     BALANCE:   10.00
 PURCHASE PRICE:  50.00      CUR DED:    0.00     REFUND:  ___0.00
   OWNER SSN / CODE ( OR, POD) - CO-OWNER BENEFICIARY:   (PURCHASE SEQUENCE)
       (1)             (2)             (3)             (4)             (5)
    100000056       _________       _________       _________       _________
  POD 000000001   ___ _________   ___ _________   ___ _________   ___ _________
       (6)             (7)             (8)             (9)             (10)
    _________       _________       _________       _________       _________
  ___ _________   ___ _________   ___ _________   ___ _________   ___ _________
 ------------------------------------------------------------------------------
 TOTAL #BONDS:   2       TOT REQ DED:    35.00    **** ALL BOND # ASSIGNED ****
 TOTAL #OWNERS:  4       TOT CUR DED:     0.00      1  2
 TOTAL BALANCE: 10.00    TOTAL REFUND:    0.00
 ------------------------------------------------------------------------------
 FUNC: A= ADD CHN  C= CHANGE  D= DELETE  N= NAME SEARCH  R= RETRIEVE  S= SUSPEND
  PF1= HELP           PF2= OWNERS        PF3= PREV SCREEN      PF4= QNORM
  PF5= MAIN MENU      PF9= QREG          PF12= END
```

Changing a Bond (Page 1)

1. Navigate to the bond template. Enter the SSN of the employee and the number of the bond to be changed. Press **ENTER**. NPPS will display the current information for the bond.
2. Change the FUNC to **C**. Enter the desired changes. Press **ENTER**.

```
COMMAND: ________                    NPPS
NAO9201                BOWN MULTIPLE MESSAGE DISPLAY



    SSN       PAYBLK     FUNC       LAST NAME                FIRST NAME    I
100 00 0056     01         R        JONES_________________   ERICK_____    L

*   PAYBLOCK 01 SSN 100-00-0056 CHANGED IN MASTER EMPLOYEE RECORD
*   NORMAL RECALCULATION HAS BEEN DONE









PF1= HELP         PF3= PREV SCREEN       PF5= MAIN MENU        PF7= BACKWARD
PF8= FORWARD      PF12= END
PF4= QNORM        PF9= QREG
```

Changing a Bond (Page 2)

3. NPPS displays the Bond Owner Multiple Message screen which states that the employees master record has been updated and the normal recalculations have been done. You may view the QNORM template in order to confirm that the recalculations have been performed. Press **PF3** if you want to view the Bond template.

```
COMMAND: ________                    NPPS
NAO1233                     BOND DEDUCTIONS - BOND
      SSN     PAYBLK  BOND#   FUNC     LAST NAME                FIRST NAME    I
  100 00 0056    01     1_      R        JONES_______           ERICK__       L
           STATUS:           BOND TO BE PURCHASED:       BOND DATE: 0000
 DENOMINATION:  100          REQ DED: __20.00     BALANCE:   10.00
 PURCHASE PRICE:  50.00      CUR DED:    0.00     REFUND:  ___0.00
   OWNER SSN / CODE ( OR, POD) - CO-OWNER BENEFICIARY:   (PURCHASE SEQUENCE)
       (1)             (2)             (3)             (4)             (5)
    100000056       _________       _________       _________       _________
  POD 000000001   ___ _________   ___ _________   ___ _________   ___ _________
       (6)             (7)             (8)             (9)             (10)
    _________       _________       _________       _________       _________
  ___ _________   ___ _________   ___ _________   ___ _________   ___ _________
 ------------------------------------------------------------------------------
 TOTAL #BONDS:   2       TOT REQ DED:    45.00    **** ALL BOND # ASSIGNED ****
 TOTAL #OWNERS:  4       TOT CUR DED:     0.00      1  2
 TOTAL BALANCE: 10.00    TOTAL REFUND:    0.00
 ------------------------------------------------------------------------------

 FUNC: A= ADD CHN  C= CHANGE  D= DELETE  N= NAME SEARCH  R= RETRIEVE  S= SUSPEND
  PF1= HELP           PF2= OWNERS        PF3= PREV SCREEN      PF4= QNORM
  PF5= MAIN MENU      PF9= QREG          PF12= END
```

Changing a Bond (Page 3)

4. The Bond template displays the changed bond. If appropriate, NPPS automatically recalculates the Purchase Price. In addition, the Total Number of Bonds, Total Required Deductions, Total Number of Owner/Co-owner Beneficiary combinations, and All Bond Numbers Assigned fields are updated.

STEPS TO CHANGE A BOND OWNER

In the example below, Mr. Jones decides to add his son's middle name to the information on the Bond Owner template for bond number 1.

```
COMMAND: ________                  NPPS
NAO1233                     BOND DEDUCTIONS - BOND
      SSN     PAYBLK  BOND#   FUNC     LAST NAME                FIRST NAME    I
  100 00 0056    01     1_      R        JONES_______            ERICK__       L
           STATUS:           BOND TO BE PURCHASED:       BOND DATE: 0000
 DENOMINATION:  100          REQ DED: __20.00     BALANCE:   10.00
 PURCHASE PRICE:  50.00      CUR DED:    0.00     REFUND:  ___0.00
   OWNER SSN / CODE ( OR, POD) - CO-OWNER BENEFICIARY:   (PURCHASE SEQUENCE)
       (1)             (2)             (3)             (4)             (5)
    100000056       _________       _________       _________       _________
  POD 000000001   ___ _________   ___ _________   ___ _________   ___ _________
       (6)             (7)             (8)             (9)             (10)
    _________       _________       _________       _________       _________
  ___ _________   ___ _________   ___ _________   ___ _________   ___ _________
 ------------------------------------------------------------------------------
 TOTAL #BONDS:   2       TOT REQ DED:    45.00    **** ALL BOND # ASSIGNED ****
 TOTAL #OWNERS:  4       TOT CUR DED:     0.00      1  2
 TOTAL BALANCE: 10.00    TOTAL REFUND:    0.00
 ------------------------------------------------------------------------------

 FUNC: A= ADD CHN  C= CHANGE  D= DELETE  N= NAME SEARCH  R= RETRIEVE  S= SUSPEND
  PF1= HELP           PF2= OWNERS        PF3= PREV SCREEN      PF4= QNORM
  PF5= MAIN MENU      PF9= QREG          PF12= END
```

Changing a Bond Owner (Page 1)

1. Navigate to the bond template. Enter the SSN of the employee and any assigned bond number. Press **ENTER**. NPPS displays the information regarding this bond. Press **PF2**.

```
 COMMAND: ________                    NPPS
 NAO1233                       BOND OWNERS - BOWN
-------------------------------------------------------------------------------
EMPLOYEE SSN: 100 00 0056       NAME: JONES                    ERICK        L
BOND OWNER SSN: 100 00 0056          FUNC: C      BOND:     1
OWNER NAME:     ERICK JONES_________________
ADDRESS:        1000 SEA HAWK LANE__________________
                _____________________________________
CITY:           WEBSTER_________   STATE: TX_     ZIP: 77598 ____

CO-OWNER/BEN CODE: POD
NAME:              JAMES ALFRED JONES_________        I.D.:  000 00 0001
-------------------------------------------------------------------------------
    OWNER SSN   CODE   CO BEN I.D.           OWNER SSN   CODE   CO BEN I.D.
   100-00-0056   POD   000-00-0001          100-00-0056   OR    100-00-0100
   100-00-0056   OR    100-00-0200          100-00-0056   OR    100-00-0300



-------------------------------------------------------------------------------
FUNCTION:   A= ADD        C= CHANGE    D= DELETE    R= RETRIEVE    S= SUSPEND
 PF1= HELP  PF3= PREV  PF7= BKWD    PF8= FRWD    PF9= SCROLL ALL   PF12= END
```

Changing a Bond Owner (Page 2)

2. NPPS displays the Bond Owner template. All owner/co-owner combinations are listed at the bottom of the screen. The first owner/co-owner combination for the bond number being processed will be displayed. Use the **PF8** key to navigate to the combination you want to change. If the combination you want to change is not linked to the current bond number, press **PF9** to scroll all owners. The bond number will change to ALL to remind you that all owners are available. Enter a FUNC of **C** and change the desired information. Press **ENTER**

```
* ADDRESS FOR OWNER 100000056 HAS BEEN CHANGED
 *  ALL CHANGES HAVE BEEN MADE....PRESS ENTER TO COMPLETE UPDATE
 COMMAND: ________                  NPPS
 NAO1233                      BOND OWNERS - BOWN
-------------------------------------------------------------------------------
EMPLOYEE SSN: 100 00 0056       NAME: EASTWOOD                 CLINT
BOND OWNER SSN: 100 00 0056          FUNC: C      BOND:     1
OWNER NAME:     ERICK JONES_________________
ADDRESS:        1000 SEA HAWK LANE__________________
                ____________________________________
CITY:           WEBSTER_________   STATE: TX_     ZIP: 77598 0000

CO-OWNER/BEN CODE: POD
NAME:              JAMES ALFRED JONES_________        I.D.:  000 00 0001
-------------------------------------------------------------------------------
    OWNER SSN   CODE   CO BEN I.D.           OWNER SSN   CODE   CO BEN I.D.
   100-00-0056   POD   000-00-0001          100-00-0056   OR    100-00-0100
   100-00-0056   OR    100-00-0200          100-00-0056   OR    100-00-0300



-------------------------------------------------------------------------------
FUNCTION:   A= ADD        C= CHANGE    D= DELETE    R= RETRIEVE    S= SUSPEND
 PF1= HELP  PF3= PREV  PF7= BKWD    PF8= FRWD    PF9= SCROLL ALL   PF12= END
```

Changing a Bond Owner (Page 3)

3. NPPS displays the message, ALL CHANGES HAVE BEEN MADE...PRESS ENTER TO COMPLETE UPDATE.

STEPS TO DELETE A BOND

In the following example, Mr. Jones decides to delete his fixed bond (i.e., bond number 1). His bond receives a status of Delete. The balance of $10.00 for this bond is converted into a refund by NPPS automatically. In addition, NPPS automatically zeros out the Balance and Total Balance fields. The Total Required Deduction is reduced by $20.00 accordingly.

The bond may be reinstated using the add function throughout this entire pay period. If the bond is not reinstated, it will be purged during initialization. Since the corresponding bond owner/co-owner beneficiary combination is not used by any other bond, it will also be purged during initialization. However, the owner/co-owner beneficiary combination may not be deleted until initialization because the bond may be reinstated throughout the entire pay period.

```
COMMAND: ________                    NPPS
NAO1233                     BOND DEDUCTIONS - BOND
      SSN     PAYBLK  BOND#   FUNC     LAST NAME                FIRST NAME    I
  100 00 0056    01     1_      D        JONES_______            ERICK__       L
          STATUS:           BOND TO BE PURCHASED:       BOND DATE: 0000
 DENOMINATION:  100          REQ DED: __20.00     BALANCE:   10.00
 PURCHASE PRICE:  50.00      CUR DED:    0.00     REFUND:  ___0.00
   OWNER SSN / CODE ( OR, POD) - CO-OWNER BENEFICIARY:   (PURCHASE SEQUENCE)
       (1)             (2)             (3)             (4)             (5)
    100000056       _________       _________       _________       _________
  POD 000000001   ___ _________   ___ _________   ___ _________   ___ _________
       (6)             (7)             (8)             (9)             (10)
    _________       _________       _________       _________       _________
  ___ _________   ___ _________   ___ _________   ___ _________   ___ _________
 ---------------------------------------------------------------------------
 TOTAL #BONDS:   2       TOT REQ DED:    45.00    **** ALL BOND # ASSIGNED ****
 TOTAL #OWNERS:  4       TOT CUR DED:     0.00      1  2
 TOTAL BALANCE: 10.00    TOTAL REFUND:    0.00
 ---------------------------------------------------------------------------
 FUNC: A= ADD CHN  C= CHANGE  D= DELETE  N= NAME SEARCH  R= RETRIEVE  S= SUSPEND
  PF1= HELP           PF2= OWNERS        PF3= PREV SCREEN      PF4= QNORM
  PF5= MAIN MENU      PF9= QREG          PF12= END
```

Deleting a Bond (Page 1)

1. Navigate to the bond template. Enter the SSN of the employee and the number of the bond to be deleted. Press **ENTER**. NPPS will display the current information for the bond.
2. Change the FUNC to **D**. Press **ENTER**.

```
COMMAND: ________                    NPPS
NAO9201                BOWN MULTIPLE MESSAGE DISPLAY


    SSN       PAYBLK     FUNC       LAST NAME                FIRST NAME    I
100 00 0056     01         R        JONES_________________   ERICK_____    L

*   PAYBLOCK 01 SSN 100-00-0056 CHANGED IN MASTER EMPLOYEE RECORD
*   NORMAL RECALCULATION HAS BEEN DONE









PF1= HELP         PF3= PREV SCREEN       PF5= MAIN MENU        PF7= BACKWARD
PF8= FORWARD      PF12= END
PF4= QNORM        PF9= QREG
```

Deleting a Bond (Page 2)

3. NPPS displays the Bond Owner Multiple Message screen which states that the employees master record has been updated and the normal recalculations have been done. You may view the QNORM template in order to confirm that the recalculations have been performed. Press **PF3** if you want to view the Bond template.

```
COMMAND: ________                    NPPS
NAO1233                     BOND DEDUCTIONS - BOND
      SSN     PAYBLK  BOND#   FUNC     LAST NAME                FIRST NAME    I
  100 00 0056    01     1_      R        JONES_______            ERICK__       L
           STATUS:           BOND TO BE PURCHASED:       BOND DATE: 0000
 DENOMINATION:  100          REQ DED: __20.00     BALANCE:    0.00
 PURCHASE PRICE:  50.00      CUR DED:    0.00     REFUND:  __10.00
   OWNER SSN / CODE ( OR, POD) - CO-OWNER BENEFICIARY:   (PURCHASE SEQUENCE)
       (1)             (2)             (3)             (4)             (5)
    100000056       _________       _________       _________       _________
  POD 000000001   ___ _________   ___ _________   ___ _________   ___ _________
       (6)             (7)             (8)             (9)             (10)
    _________       _________       _________       _________       _________
  ___ _________   ___ _________   ___ _________   ___ _________   ___ _________
 ------------------------------------------------------------------------------
 TOTAL #BONDS:   2       TOT REQ DED:    25.00    **** ALL BOND # ASSIGNED ****
 TOTAL #OWNERS:  4       TOT CUR DED:     0.00      1  2
 TOTAL BALANCE:  0.00    TOTAL REFUND:    0.00
 ------------------------------------------------------------------------------

 FUNC: A= ADD CHN  C= CHANGE  D= DELETE  N= NAME SEARCH  R= RETRIEVE  S= SUSPEND
  PF1= HELP           PF2= OWNERS        PF3= PREV SCREEN      PF4= QNORM
  PF5= MAIN MENU      PF9= QREG          PF12= END
```

Deleting a Bond (Page 3)

4. The Bond template displays the bond status as Delete. Any outstanding Balance has been converted to a Refund. In addition, Total Required Deductions has been reduced by the Required Deduction amount for the deleted bond.

Since you may reinstate the bond at any time during the current pay period, the Total Number of Owner/Co-owner Beneficiary combinations, the All Bond Number Assigned and the Total Number of Bonds fields are not updated until you initialize for the next pay period. Accordingly, you may not delete the corresponding owner/co-owner beneficiary combination for a fixed bond. In addition, you may not delete all the owner/co-owner beneficiary combinations for a rotating bond.

STEPS TO DELETE AN INACTIVE OWNER

In the following example, Mr. Jones decides to remove his third grandchild from the rotating bond. However, he wants every other aspect of the bond to remain the same.

```
COMMAND: ________                    NPPS
NAO1233                     BOND DEDUCTIONS - BOND
      SSN     PAYBLK  BOND#   FUNC     LAST NAME                FIRST NAME    I
  100 00 0056    01     2_      R        JONES_______           ERICK__       L
          STATUS:           BOND TO BE PURCHASED:       BOND DATE: 0000
 DENOMINATION:   50          REQ DED: __25.00     BALANCE:    0.00
 PURCHASE PRICE:  25.00      CUR DED:    0.00     REFUND:  ___0.00
   OWNER SSN / CODE ( OR, POD) - CO-OWNER BENEFICIARY:   (PURCHASE SEQUENCE)
       (1)            (2)            (3)            (4)            (5)
    100000056       100000056       100000056       _________       _________
   OR 000000001   OR_ 100000200   OR_ 100000300   ___ _________   ___ _________
       (6)            (7)            (8)            (9)            (10)
    _________       _________       _________       _________       _________
  ___ _________   ___ _________   ___ _________   ___ _________   ___ _________
 ------------------------------------------------------------------------------
 TOTAL #BONDS:   2       TOT REQ DED:    25.00    **** ALL BOND # ASSIGNED ****
 TOTAL #OWNERS:  4       TOT CUR DED:     0.00      1  2
 TOTAL BALANCE:  0.00    TOTAL REFUND:    0.00
 ------------------------------------------------------------------------------

 FUNC: A= ADD CHN  C= CHANGE  D= DELETE  N= NAME SEARCH  R= RETRIEVE  S= SUSPEND
  PF1= HELP           PF2= OWNERS        PF3= PREV SCREEN      PF4= QNORM
  PF5= MAIN MENU      PF9= QREG          PF12= END
```

Deleting an Inactive Owner (Page 1)

1. Navigate to the bond template. Enter the SSN of the employee and the number of the bond to be changed. Press **ENTER**. NPPS will display the current information for the bond.

```
COMMAND: ________                    NPPS
NAO1233                     BOND DEDUCTIONS - BOND
      SSN     PAYBLK  BOND#   FUNC     LAST NAME                FIRST NAME    I
  100 00 0056    01     2_      C        JONES_______           ERICK__       L
           STATUS:           BOND TO BE PURCHASED:       BOND DATE: 0000
 DENOMINATION:   50          REQ DED: __25.00     BALANCE:    0.00
 PURCHASE PRICE:  25.00      CUR DED:    0.00     REFUND:  ___0.00
   OWNER SSN / CODE ( OR, POD) - CO-OWNER BENEFICIARY:   (PURCHASE SEQUENCE)
       (1)             (2)             (3)             (4)             (5)
    100000056       100000056       _________       _________       _________
   OR 000000001   OR_ 100000200   ___ _________   ___ _________   ___ _________
       (6)             (7)             (8)             (9)             (10)
    _________       _________       _________       _________       _________
  ___ _________   ___ _________   ___ _________   ___ _________   ___ _________
 ------------------------------------------------------------------------------
 TOTAL #BONDS:   2       TOT REQ DED:    25.00    **** ALL BOND # ASSIGNED ****
 TOTAL #OWNERS:  4       TOT CUR DED:     0.00      1  2
 TOTAL BALANCE:  0.00    TOTAL REFUND:    0.00
 ------------------------------------------------------------------------------

 FUNC: A= ADD CHN  C= CHANGE  D= DELETE  N= NAME SEARCH  R= RETRIEVE  S= SUSPEND
  PF1= HELP           PF2= OWNERS        PF3= PREV SCREEN      PF4= QNORM
  PF5= MAIN MENU      PF9= QREG          PF12= END
```

Deleting an Inactive Owner (Page 2)

2. Change the FUNC to **C**. Blank out the information for the owner/co-owner beneficiary combination you want to delete. You may delete all but one of the combinations for a rotating bond. You may not delete the only combination for a fixed bond. Press **ENTER**.

```
COMMAND: ________                    NPPS
NAO9201                BOWN MULTIPLE MESSAGE DISPLAY


    SSN       PAYBLK     FUNC       LAST NAME                FIRST NAME    I
100 00 0056     01         R        JONES_________________   ERICK_____    L

*   PAYBLOCK 01 SSN 100-00-0056 CHANGED IN MASTER EMPLOYEE RECORD
*   NORMAL RECALCULATION HAS BEEN DONE









PF1= HELP         PF3= PREV SCREEN       PF5= MAIN MENU        PF7= BACKWARD
PF8= FORWARD      PF12= END
PF4= QNORM        PF9= QREG
```

Deleting an Inactive Owner (Page 3)

3. NPPS displays the Bond Owner Multiple Message screen which states that the employees master record has been updated and the normal recalculations have been done. You may view the QNORM template in order to confirm that the recalculations have been performed. Press **PF3** in order to view the Bond template.

```
COMMAND: ________                    NPPS
NAO1233                     BOND DEDUCTIONS - BOND
      SSN     PAYBLK  BOND#   FUNC     LAST NAME                FIRST NAME    I
  100 00 0056    01     2_      R        JONES_______            ERICK__       L
           STATUS:           BOND TO BE PURCHASED:       BOND DATE: 0000
 DENOMINATION:   50          REQ DED: __25.00     BALANCE:    0.00
 PURCHASE PRICE:  25.00      CUR DED:    0.00     REFUND:  ___0.00
   OWNER SSN / CODE ( OR, POD) - CO-OWNER BENEFICIARY:   (PURCHASE SEQUENCE)
       (1)             (2)             (3)             (4)             (5)
    100000056       100000056       _________       _________       _________
   OR 000000001   OR_ 100000200   ___ _________   ___ _________   ___ _________
       (6)             (7)             (8)             (9)             (10)
    _________       _________       _________       _________       _________
  ___ _________   ___ _________   ___ _________   ___ _________   ___ _________
 ------------------------------------------------------------------------------
 TOTAL #BONDS:   2       TOT REQ DED:    25.00    **** ALL BOND # ASSIGNED ****
 TOTAL #OWNERS:  4       TOT CUR DED:     0.00      1  2
 TOTAL BALANCE:  0.00    TOTAL REFUND:    0.00
 ------------------------------------------------------------------------------

 FUNC: A= ADD CHN  C= CHANGE  D= DELETE  N= NAME SEARCH  R= RETRIEVE  S= SUSPEND
  PF1= HELP           PF2= OWNERS        PF3= PREV SCREEN      PF4= QNORM
  PF5= MAIN MENU      PF9= QREG          PF12= END
```

Deleting an Inactive Owner (Page 4)

4. The Bond template displays the changed bond. You may press **PF2** in order to view the Bond Owner template.

```
 COMMAND: ________                    NPPS
 NAO1233B                     BOND OWNERS - BOWN

 ------------------------------------------------------------------------------
 EMPLOYEE SSN: 100 00 0056       NAME:   JONES                 ERICK         L
 BOND OWNER SSN: 100 00 0056          FUNC:  D
 OWNER NAME:    ERICK JONES_________________
 ADDRESS:       1000 SEA HAWK LANE__________
                _____________________________________
 CITY:           WEBSTER________   STATE: TX_     ZIP: 77598 - ____

 CO-OWNER/BEN CODE: OR
 NAME:              JANE JONES_______                        I.D.: 100 00 0300
 ------------------------------------------------------------------------------
     OWNER SSN   CODE   CO BEN I.D.            OWNER SSN   CODE   CO BEN I.D.
    100-00-0056   POD   000-00-0001           100-00-0056   OR    100-00-0200
    100-00-0056   OR    100-00-0100
    100-00-0056   OR    100-00-0300
 ------------------------------------------------------------------------------

 FUNCTION:   A= ADD        C= CHANGE    D= DELETE    R= RETRIEVE    S= SUSPEND
  PF1= HELP    PF3= PREV SCREEN    PF7= BACKWARD    PF8= FORWARD    PF12= END
```

Deleting an Inactive Owner (Page 5)

5. NPPS displays the Bond Owner template. Since the owner is no longer associated with the bond number, press **PF9** to scroll all owner/co-owner combinations for the employee. Press **PF8** to navigate to the combination to be deleted. Enter a FUNC of **D**. Press **ENTER**.

```
 *  OWNER 56 / OR / 300 DELETED
 COMMAND: ________                    NPPS
 NAO1233B                      BOND OWNERS - BOWN
--------------------------------------------------------------------------------

EMPLOYEE SSN: 100 00 0056       NAME:   JONES                 ERICK         L
BOND OWNER SSN: 100 00 0056          FUNC:  R
OWNER NAME:    ERICK JONES_________________
ADDRESS:       1000 SEA HAWK LANE__________
                 ____________________________________
CITY:           WEBSTER________   STATE: TX_     ZIP: 77598 - ____

CO-OWNER/BEN CODE: OR
NAME:              JANE JONES_______                        I.D.: 100 00 0300
--------------------------------------------------------------------------------
    OWNER SSN   CODE   CO BEN I.D.            OWNER SSN   CODE   CO BEN I.D.
   100-00-0056   POD   000-00-0001           100-00-0056   OR    100-00-0200
   100-00-0056   OR    100-00-0100
   100-00-0056   OR    100-00-0300
--------------------------------------------------------------------------------

FUNCTION:   A= ADD        C= CHANGE    D= DELETE    R= RETRIEVE    S= SUSPEND
 PF1= HELP    PF3= PREV SCREEN    PF7= BACKWARD    PF8= FORWARD    PF12= END
```

Deleting an Inactive Owner (Page 6)

6. NPPS displays the message, OWNER ## / OR / DELETED. Press **ENTER** to complete the update.

```
COMMAND: ________                    NPPS
NAO1233                     BOND DEDUCTIONS - BOND
      SSN     PAYBLK  BOND#   FUNC     LAST NAME                FIRST NAME    I
  100 00 0056    01     2_      R        JONES_______            ERICK__       L
          STATUS:           BOND TO BE PURCHASED:       BOND DATE: 0000
 DENOMINATION:   50          REQ DED: __25.00     BALANCE:    0.00
 PURCHASE PRICE:  25.00      CUR DED:    0.00     REFUND:  ___0.00
   OWNER SSN / CODE ( OR, POD) - CO-OWNER BENEFICIARY:   (PURCHASE SEQUENCE)
       (1)            (2)            (3)            (4)            (5)
    100000056       100000056       _________      _________      _________
   OR 000000001   OR_ 100000200   ___ _________  ___ _________  ___ _________
       (6)            (7)            (8)            (9)            (10)
    _________      _________      _________      _________      _________
  ___ _________  ___ _________  ___ _________  ___ _________  ___ _________
--------------------------------------------------------------------------------
TOTAL #BONDS:   2       TOT REQ DED:    25.00    **** ALL BOND # ASSIGNED ****
TOTAL #OWNERS:  3       TOT CUR DED:     0.00      1  2
TOTAL BALANCE:  0.00    TOTAL REFUND:    0.00
--------------------------------------------------------------------------------

FUNC: A= ADD CHN  C= CHANGE  D= DELETE  N= NAME SEARCH  R= RETRIEVE  S= SUSPEND
 PF1= HELP           PF2= OWNERS        PF3= PREV SCREEN      PF4= QNORM
 PF5= MAIN MENU      PF9= QREG          PF12= END
```

Deleting an Inactive Owner (Page 7)

7. The Bond template displays the changed bond. NPPS has updated the Total Number Owner/Co-owner Beneficiary field according to the number of combinations you have deleted.

4.2.2.1.4 NEBA Life Insurance

```
COMMAND: ________                    NPPS
NAO1234             NEBA LIFE AND TRAVEL INSURANCE - NEBA
-------------------------------------------------------------------------------

     SSN      PAYBLK   FUNC           LAST NAME               FIRST NAME    I
 ___ __ ____            _            ______________________  ____________  _


BASIC: _     SPOUSE: _     OPTIONAL UNITS: _     SMOKER: _       CHAPTER: _
     (Y OR BLANK)            (1-6 OR BLANK)      (Y OR BLANK)    (1 OR BLANK)

TRAVEL COVERAGE

PLAN :  _  (1-4 OR BLANK)
$25,000  _      $50,000  _      $100,000  _
SPOUSE: _  (Y OR BLANK)
                                                   BIRTH DATE:
-------------------------------------------------------------------------------
FUNCTION:    A= ADD CHN   C= CHANGE   N= NAME SEARCH   R= RETRIEVE   S= SUSPEND
 PF1= HELP  PF3= PREV SCREEN  PF4= QNORM  PF5= MAIN MENU  PF9= QREG  PF12= END
```

NEBA Life and Travel Insurance (NEBA)

DESCRIPTION AND EXECUTION

The NEBA Life Insurance (NEBA) template is used to set up and maintain employee information which identifies the NEBA basic, optional, spousal, and NEBA travel accident insurance selections. Given an employee's birth date, NPPS computes the employee's age for use in the computation of the NEBA life insurance biweekly deduction. NPPS computes the employee's age class on the basis of date of birth. The NEBA table computes the deduction on the basis of age class, salary class, units, and smoker code for optional insurance. Basic coverage must be selected if spouse or optional coverage is selected. The NEBATRV table computes the biweekly deduction for NEBA travel accident insurance based on the plan, insurance amount, and spouse enrollment. The NEBA travel deduction is not reported separately. It is part of the total NEBA deduction. NEBA fields will be set to null during pay initialization of the pay period in which the employee terminates. NPPS provides the capability to report deductions to two different NEBA chapters. A blank in the Chapter field will report the default name and address from the TINSTALL table. A "1" will use the alternate chapter name and address.

<u>Steps to Reach NEBA Life Insurance</u>

1. At the Main Menu, select **2** - Payroll.
2. At the Payroll Main Menu, select **2** - MER.
3. At the MER Data Entry Menu, select **1** - Master Selection MER Menu.
4. At the Master Selection MER Menu, select **4** - NEBA Life Insurance.

4.2.2.1.5 Military Deposit Deductions

```
COMMAND: ________                    NPPS
NAO1235            MILITARY DEPOSIT DEDUCTIONS - MIL
-------------------------------------------------------------------------------
     SSN      PAYBLK   FUNC            LAST NAME                FIRST NAME    I
 ___ __ ____            _             ______________________  ____________  _

 TOTAL REQUIRED:         _______0.00   REQUESTED W/H:   _______0.00    ENTER X
                                                                       TO CANCEL
 INTEREST ACCRUAL DATE:  ________                                          _

 INTEREST ACCRUED YTD:          0.00   DEDUCTION YTD:            0.00
 INTEREST ACCRUED CUM:          0.00   DEDUCTION CUM:            0.00
                                       TRANSFERRED IN:           0.00
 CASH PAYMENT:           _______0.00   TRANSFERRED OUT:          0.00
                                       BALANCE DUE:              0.00

 SCD LEAVE:                            RETIREMENT PLAN:
-------------------------------------------------------------------------------
FUNCTIONS:  A= ADD CHN   C= CHANGE   N= NAME SEARCH   R= RETRIEVE   S= SUSPEND
 PF1= HELP         PF3= PREV SCREEN      PF4= QNORM          PF5= MAIN MENU
 PF9= QREG         PF12= END
```

Military Deposit Deductions (MIL)

DESCRIPTION AND EXECUTION

The Military Deposit Deductions (MIL) template is used to set up and maintain employee information for the biweekly military deposit deduction amount, total initial deposit amount required, and a cash payment amount. NPPS provides an Interest Accrued Date based on the employee's Federal Service Computation date.

<u>Steps to Reach Military Deposit Deductions</u>

1. At the Main Menu, select **2** - Payroll.
2. At the Payroll Main Menu, select **2** - MER.
3. At the Master Employee Record Data Entry Menu, select **1** - Master Selection MER Menu.
4. At the Master Selection MER Menu, select **5** - Military Deposit Deductions.

NPPS automatically calculates the compounded retroactive interest when you enter the Interest Accrual Date and the Total Required Amount. However, subsequent changes in the Interest Accrual Date may produce erroneous recomputation of the interest due if the date change involves more than the current year.

4.2.2.1.6 Miscellaneous Voluntary Deductions

```
COMMAND: ________                    NPPS
NAO1236            MISCELLANEOUS VOLUNTARY DEDUCTIONS - MISC
-------------------------------------------------------------------------------

    SSN      PAYBLK   FUNC        LAST NAME                  FIRST NAME      I
___ __ ____            _         ______________________     ____________    _

 CFC CODE:                _________        UNION CODE (99=SEA):  __
 CFC DEDUCTION AMT:       ________         UNION DUES DED AMT:   ____________
                                           UNION DUES TABLE AMT:
 MISC DEDUCTION AMT:      ____________

 ADV PAY REQUESTED W/H:   ____________     ADV PAY DED YTD:
 ADV PAY TOT REQUIRED:    ____________     ADV PAY DED CUM:
                                           ADV PAY BALANCE DUE:

  SCD LEAVE:                              UNION BARGAINING UNIT STATUS:
-------------------------------------------------------------------------------
FUNCTIONS:  A= ADD CHN   C= CHANGE   N= NAME SEARCH   R= RETRIEVE   S= SUSPEND
 PF1= HELP         PF3= PREV SCREEN      PF4= QNORM          PF5= MAIN MENU
 PF9= QREG         PF12= END
```

Miscellaneous Voluntary Deductions (MISC)

DESCRIPTION AND EXECUTION

The Miscellaneous Voluntary Deductions (MISC) template is used to set up and maintain CFC deductions and to identify the receiving organization. This template is also used to set up and maintain employee union dues requiring biweekly deductions and to identify the union. The Misc Deduction Amt field is used only when a specific deduction has not been identified and provided in NPPS. The Advance Pay deductions are used to collect an advance made to individual employees and to display the remaining balance due.

<u>Steps to Reach Miscellaneous Voluntary Deductions</u>

1. At the Main Menu, select **2** - Payroll.
2. At the Payroll Main Menu, select **2** - MER.
3. At the Master Employee Record Data Entry Menu, select **1** - Master Selection MER Menu.
4. At the Master Selection MER Menu, select **6** - Miscellaneous Voluntary Deductions.

DESCRIPTION OF DATA PROCESSING RESULTS AND OUTPUT

Entering a valid union code (contained in the Union table) and no deduction amount results in a computation of the deduction based on the standard deduction parameters found in the Union table. To override this computed amount, enter a value in the union dues deduction amount field.

4.2.2.1.7 Thrift Savings Plan Deductions

```
 COMMAND: ________                    NPPS
 NAO1237                    THRIFT SAVINGS PLAN - TSP
-------------------------------------------------------------------------------
     SSN         PAYBLK   FUNC       LAST NAME                FIRST NAME    I
 ___ __ ____                _        ______________________   ____________  _

     DEDUCTION                         DISTRIBUTION RATE
      TSP PCT:    ____               G FUND   F FUND   C FUND
  OR  TSP AMT:    ____               ______   ______   ______

CURRENT PP TOTAL      G FUND    F FUND    C FUND    TOTAL    YEAR-TO-DATE
EMP DED:
GOV BASIC:
GOV MATCH:
TOTAL:

TSP STATUS:         RET CD:       VEST:             SEP CD:       SEP FLAG: _
STAT DATE:                      TSP SCD:           SEP DATE:
-------------------------------------------------------------------------------
FUNCTIONS:  A= ADD CHN   C= CHANGE   N= NAME SEARCH   R= RETRIEVE   S= SUSPEND
 PF1= HELP  PF3= PREV SCREEN  PF4= QNORM  PF5= MAIN MENU  PF9=QREG  PF12=END_
```

Thrift Savings Plan (TSP)

DESCRIPTION AND EXECUTION

The Thrift Savings Plan (TSP) template is used to set up and maintain the rate of the employee deduction or the deduction amount selected by the employee and to distribute the deduction to one or all of the three investment funds: Government Securities Investment Fund, Fixed Income Index Investment Fund, and Common Stock Index Fund.

<u>Steps to Reach Thrift Savings Plan</u>

1. At the Main Menu, select **2** - Payroll.
2. At the Payroll Main Menu, select **2** - MER.
3. At the Master Employee Record Data Entry Menu, select **1** - Master Selection MER Menu.
4. At the Master Selection MER Menu, select **7** - Thrift Savings Plan.

4.2.2.1.8 Federal and State Taxes

```
COMMAND:  _______                    NPPS
NAO1241                FEDERAL AND STATE TAXES - FTAX
-------------------------------------------------------------------------------
     SSN      PAYBLK   FUNC            LAST NAME                FIRST NAME    I
 ___ __ ____             _            ______________________  ____________  _
                              *** FEDERAL TAXES ***
MARITAL STATUS (M,S): _         EXEMPTIONS: __            ADDITIONAL AMT:  ___
EIC MARITAL CODE:     _                                   EXEMPT FROM W/H: _
(1=EMPLOYEE ONLY, 2=EMPLOYEE AND SPOUSE)                  (E OR BLANK)

                              *** STATE TAXES ***
STATE CODE:     __     MARITAL STATUS (M,S,H):     _    EXEMPTIONS:          __
ADD EXEMPTS:    __     FILING STATUS (DC=J,S, ):   _    ALTERNATE %:      _____
ALTERNATE AMT:  _____                 (CT=A,B,C,D)       WORKING SPOUSE (Y, ): _
ADDITIONAL AMT: _____  DEPENDENT OF ANOTHER (Y, ): _    EXEMPT FROM W/H(E, ): _

 FILING STATUS (FOR DC) - J=JOINTLY, S=SEPARATELY;     ALT AMT (MS ONLY)
 ALT % (AZ & MD ONLY); DEPENDENT OF ANOTHER (AL ONLY); WORKING SPOUSE (MS ONLY)
-------------------------------------------------------------------------------
FUNCTIONS:   A= ADD CHN   C= CHANGE   N= NAME SEARCH   R= RETRIEVE   S= SUSPEND
 PF1= HELP          PF3= PREV SCREEN   PF4= QNORM            PF5= MAIN MENU
 PF9= QREG          PF12= END
```

Federal and State Taxes (FTAX)

DESCRIPTION AND EXECUTION

The Federal and State Taxes (FTAX) template is used to set up and maintain the employee information required to compute the biweekly deductions for federal and state tax withholdings. The state tax deduction amount is a table-determined amount based on the information entered by the clerk. However, the following states need additional information in order to compute the state tax.

Alabama - If the employee is being claimed as a dependent by someone else, the Dependent of Another field should contain a "Y."

Arizona - The percent elected by the employee to be withheld should be entered in the Alternate % field.

Connecticut - The Filing Status should be either "A," "B," "C," or "D." If the employee has specified a reduced withholding amount, that amount should be entered in the Additional Amt field as a negative value.

District of Colombia - The Filing Status should be either "J" or "S" if the Martial Status field is "M."

Maryland - The Alternate % field should be used to indicate the appropriate tax table based on the percent of local income tax included.

Mississippi - The Exemptions field should be used to specify the number of dependents claimed by the employee. The Add Exempts should be used to specify the number of exemptions claimed for age and blindness. The Alternate Amt field should be used to indicate the amount of the personal exemption claimed by the employee. The Working Spouse field should contain a "Y" if the employee's spouse is also employed.

Steps to Reach Federal and State Taxes

1. At the Main Menu, select **2** - Payroll.
2. At the Payroll Main Menu, select **2** - MER.
3. At the Master Employee Record Data Entry Menu, select **1** - Master Selection MER Menu.
4. At the Master Selection MER Menu, select **8** - Federal and State Taxes.

4.2.2.1.9 City and County Taxes

```
COMMAND: ________                    NPPS
NAO1242                  CITY AND COUNTY TAXES - CTAX
-------------------------------------------------------------------------------

     SSN      PAYBLK   FUNC            LAST NAME                FIRST NAME    I
 ___ __ ____    __       R             _______________________  ____________  _


*** CITY TAXES ***
             CITY TAX CODE:      ___       MARITAL STATUS (M,S,H):  _
             ADDITIONAL AMOUNT:  ____      EXEMPTIONS:              __
             ALTERNATE AMOUNT:   ____      ADDITIONAL EXEMPTIONS:   __
             ALTERNATE %:        ___


*** COUNTY TAXES ***
             COUNTY TAX CODE:    ___       MARITAL STATUS (M,S,H):  _
             ADDITIONAL AMOUNT:  ____      EXEMPTIONS:              __
             ALTERNATE AMOUNT:   ____      ADDITIONAL EXEMPTIONS:   __
             ALTERNATE %:        ___

-------------------------------------------------------------------------------
FUNCTIONS:   A= ADD CHN   C= CHANGE   N= NAME SEARCH   R= RETRIEVE   S= SUSPEND
 PF1= HELP          PF3= PREV SCREEN   PF4= QNORM            PF5= MAIN MENU
 PF9= QREG          PF12= END
```

City and County Taxes (CTAX)

DESCRIPTION AND EXECUTION

The City and County Taxes (CTAX) template is used to set up and maintain the employee information required to compute biweekly deductions for city and county tax withholdings (as appropriate). The tax deduction amount is a table-determined amount based on code plus any additional amount input by the clerk, or by the alternate amount or alternate percent input by the clerk. The Additional Exemption field is only used in those states requiring this information. County taxes are currently not used in NPPS.

<u>Steps to Reach City and County Taxes</u>

1. At the Main Menu, select **2** - Payroll.
2. At the Payroll Main Menu, select **2** - MER.
3. At the Master Employee Record Data Entry Menu, select **1** - Master Selection MER Menu.
4. At the Master Selection MER Menu, select **9** - City and County Taxes.

4.2.2.1.10 Bankruptcy Payments

```
COMMAND: ________                    NPPS
NAO1251                 BANKRUPTCY PAYMENTS - BANKRUPT
--------------------------------------------------------------------------------

     SSN      PAYBLK   FUNC          LAST NAME                FIRST NAME    I
 ___ __ ____            _           ______________________  _____________  _

                         *** BANKRUPTCY PAYMENTS ***

CURRENT DED:
REQUESTED DED: _____________ TOTAL TO BE DED: _____________ DED CUM: _____________

PAYEE NAME: ____________________________________
ADDRESS: ______________________________________
CITY: _________________   STATE: ___   ZIP: _____ - ____
REMARKS: _____________                                   ENTER X TO CANCEL: _

--------------------------------------------------------------------------------
FUNCTIONS:   C= CHANGE       N= NAME SEARCH       R= RETRIEVE       S= SUSPEND
 PF1= HELP           PF3= PREV SCREEN   PF4= QNORM            PF5= MAIN MENU
 PF9= QREG           PF12= END
```

Bankruptcy Payments (BANKRUPT)

DESCRIPTION AND EXECUTION

The Bankruptcy Payments (BANKRUPT) template is used to set up and maintain the biweekly deduction amount for court-ordered bankruptcy deductions as well as the total payment amount. Bankruptcy deductions cease automatically when the Ded Cum field equals the Total To Be Ded field, or when "X" is entered in the Enter X To Cancel field. A check is automatically sent to the payee entered on the template. The Remarks field may contain up to twelve characters and can be used to enter additional payment information pertaining to such items as court case or account number.

<u>Steps to Reach Bankruptcy Payments</u>

1. At the Main Menu, select **2** - Payroll.
2. At the Payroll Main Menu, select **2** - MER.
3. At the Master Employee Record Data Entry Menu, select **1** - Master Selection MER Menu.
4. At the Master Selection MER Menu, select **10** - Bankruptcy Payments.

4.2.2.1.11 Indebtedness to US Government

```
COMMAND: ________                    NPPS
NAO1252                 INDEBTEDNESS TO U.S. - INDEBT
--------------------------------------------------------------------------------
     SSN      PAYBLK   FUNC          LAST NAME                FIRST NAME    I
 ___ __ ____            _           ______________________  ____________  _

                        *** INDEBTEDNESS TO U.S. ***

TOTAL PP DEDUCTION:                                EMPLOYEE PAYMENT COUNT: 0 OF 0
CURR DED:
REQUESTED DED: _____________ TOTAL TO BE DED: _____________ DED CUM: _____________

PAYEE NAME: ____________________________________
ADDRESS: ______________________________________
CITY: _________________   STATE: ___   ZIP: _____ - ____
REMARKS: _____________                                     ENTER X TO CANCEL: _

--------------------------------------------------------------------------------
FUNCTIONS:   C= CHANGE       N= NAME SEARCH       R= RETRIEVE       S= SUSPEND
 PF1= HELP           PF3= PREV SCREEN   PF4= QNORM            PF5= MAIN MENU
 PF7= BACKWARD       PF8= FORWARD       PF9= QREG             PF12= END
```

Indebtedness to US Government (INDEBT)

DESCRIPTION AND EXECUTION

The Indebtedness to US (INDEBT) template is used to set up and maintain the biweekly deduction amount and the total indebtedness amount for as many as five deductions to repay indebtedness to the US Government. An Indebtedness to US deduction ceases automatically when the Ded Cum field equals the Total To Be Ded field, or when "X" is entered in the Enter X To Cancel field.

<u>Steps to Reach Indebtedness to US</u>

1. At the Main Menu, select **2** - Payroll.
2. At the Payroll Main Menu, select **2** - MER.
3. At the Master Employee Record Data Entry Menu, select **1** - Master Selection MER Menu.
4. At the Master Selection MER Menu, select **11** - Indebtedness to US.

To retrieve, add, change, or cancel a second through fifth deduction, use the Backward and Forward PF keys to move from one deduction screen to another. Each of the five Indebtedness to US screens represents an individual deduction. The Employee Payment Count field indicates the number of Indebtedness to US deductions currently taken from the employee's salary.

4.2.2.1.12 Child Support Payments

```
COMMAND: ________                    NPPS
NAO1253                CHILD SUPPORT PAYMENTS - CHILDSP
--------------------------------------------------------------------------------
     SSN      PAYBLK   FUNC          LAST NAME                FIRST NAME    I
 ___ __ ____            _           ______________________  ____________  _

                        *** CHILD SUPPORT PAYMENTS ***

TOTAL PP DEDUCTION:                                EMPLOYEE PAYMENT COUNT: 0 OF 0
DATE LIMIT: ________        CURR DED:
REQUESTED DED: ____________ TOTAL TO BE DED: ____________ DED CUM: ____________

PAYEE NAME: ____________________________________
ADDRESS: ______________________________________
CITY: _________________   STATE: ___   ZIP: _____ - ____
REMARKS: ____________                                    ENTER X TO CANCEL: _

--------------------------------------------------------------------------------
FUNCTIONS:   C= CHANGE       N= NAME SEARCH       R= RETRIEVE       S= SUSPEND
 PF1= HELP           PF3= PREV SCREEN   PF4= QNORM            PF5= MAIN MENU
 PF7= BACKWARD       PF8= FORWARD       PF9= QREG             PF12= END
```

Child Support Payments (CHILDSP)

DESCRIPTION AND EXECUTION

The Child Support Payments (CHILDSP) template is used to set up and maintain the biweekly deduction amount for three child support deductions, total deduction amounts, and expiration dates. A Child Support Deduction ceases automatically when the Ded Cum field equals Total To Be Ded field, the Date Limit field is reached during a pay period, or when "X" is entered in the Enter X To Cancel field. A check is automatically sent to the payee listed on the template. The Remarks field can contain up to twelve characters and can be used to enter additional information such as the court case, account number, or other required data pertaining to the payment. The Employee Payment Count field indicates the number of Child Support Payments currently being deducted, up to a maximum of three payments.

<u>Steps to Reach Child Support Payments</u>

1. At the Main Menu, select **2** - Payroll.
2. At the Payroll Main Menu, select **2** - MER.
3. At the Master Employee Record Data Entry Menu, select **1** - Master Selection MER Menu.
4. At the Master Selection MER Menu, select **12** - Child Support Payments.

Steps to Retrieve, Add, Change, or Cancel a Second or Third Child Support Payment

1. Enter the employee's SSN and press **ENTER**. Then press **PF8** to view the next Child Support Payments screen. Fill in or change this screen as desired.
2. Each of the three Child Support Payments screens represents an individual deduction.

4.2.2.1.13 Commercial Garnishments

```
COMMAND: ________                    NPPS
NAO1254                COMMERCIAL GARNISHMENTS - GARNISH
--------------------------------------------------------------------------------
     SSN      PAYBLK   FUNC          LAST NAME                FIRST NAME    I
 ___ __ ____             R           ______________________  ____________  _

                        *** COMMERCIAL GARNISHMENTS ***

TOTAL PP DEDUCTION:                                EMPLOYEE PAYMENT COUNT: 1 OF 0
CURR DED:
REQUESTED DED: ____________ TOTAL TO BE DED: ____________ DED CUM: ____________

PAYEE NAME: ____________________________________
ADDRESS: ______________________________________
CITY: _________________   STATE: ___   ZIP: _____ - ____
REMARKS: ____________                                     ENTER X TO CANCEL: _

--------------------------------------------------------------------------------
FUNCTIONS:   C= CHANGE       N= NAME SEARCH       R= RETRIEVE       S= SUSPEND
 PF1= HELP           PF3= PREV SCREEN   PF4= QNORM            PF5= MAIN MENU
 PF7= BACKWARD       PF8= FORWARD       PF9= QREG             PF12= END
```

Commercial Garnishments (GARNISH)

DESCRIPTION AND EXECUTION

The Commercial Garnishments template is used to set up and maintain the biweekly deduction amount and total commercial debts amount for as many as 9 deductions to repay commercial debts to creditors. A Commercial Garnishments ceases automatically when the Ded Cum field equals the Total To Be Ded field, or when "X" is entered in the Enter X to Cancel field. The remarks field can contain up to twelve characters and can be used to enter additional information.

<u>Steps to Reach Commercial Garnishments</u>

1. At the Main Menu, select **2** - Payroll.
2. At the Payroll Main Menu, select **2** - MER.
3. At the Master Employee Record Data Entry Menu, select **1** - Master Selection MER Menu.
4. At the Master Selection MER Menu, select **13** - Commercial Garnishments.

To retrieve, add, change, or cancel a second through ninth deduction, use the Backward and Forward PF keys to move from one deduction screen to another. Each of the nine Commercial Garnishments screens represents an individual deduction. The Employee Payment Count field indicates the number of Commercial Garnishments deductions, currently taken from the employee's salary.

4.2.2.2 Adjustments

NPPS provides the capability to adjust current pay period earnings, accumulations of earnings, accumulation of deductions, accumulation of hours worked, and leave balances.

Current Pay Period Earnings Adjustments - Identifies the prior pay period date to be associated with the earnings adjustments. NPPS also provides the capability to apply the adjustment amount to the corresponding accumulation data field. Computed earnings amounts are maintained separately from the adjustment amounts. Following are the current pay period earnings adjustments.

- Earnings and Refunds Adjustments
- Cost of Living Allowance (COLA) and Foreign Differential
- Current TSP Adjustments
- Employee Insurance Adjustments
- Other Deductions Adjustments
- Lump Sum Leave/Reactivations
- Permanent Change of Station (PCS) Travel Adjustment Biweekly (B/W)

Accumulations Adjustments - Automatically increments accumulations of earning and deductions, paid and unpaid leave accumulations, work hour accumulations, and accumulations associated with limited appointments. Following are the accumulations adjustments.

- Annual Leave
- Compensatory Time
- Religious Compensatory Time
- Credit Hours
- Leave Without Pay Hours
- Restored Leave
- Sick Leave
- Continuation of Pay Leave
- Donated Annual Leave

- Home Leave
- Other Leave Used YTD
- Time Off Awards
- Extended Compensatory Time
- Former State Taxes
- Former City Tax
- YTD Earnings and Premium Hours Worked
- YTD Leave Cost
- YTD Deductions
- YTD Retirement Adjustments
- YTD Deductions TSP
- Appointment Limitations

4.2.2.2.1 Earnings and Refunds Adjustments

```
COMMAND: ________                    NPPS
NAO1211             EARNINGS AND REFUNDS ADJUSTMENTS - ADJ   1 OF 2
-------------------------------------------------------------------------------
     SSN      PAYBLK   FUNC           LAST NAME                FIRST NAME    I
 ___ __ ____            _            ______________________   ____________  _
 EARNINGS     HOURS    AMOUNT          REMARKS                 CURRENT PP B/W
ADJ BASIC:  ________  _________                                BASE:
    BASIC:  ________  _________   ___________________________  GROSS:
LOCAL PAY:  ________  _________   ___________________________  PAID FLSA:
OVERTIME:   ________  _________   ___________________________  STAT CUT:
HOL WRK:    ________  _________   ___________________________  EIC PYMT:
HAZARDOUS:  ________  _________   ___________________________
SUN DIFF:   ________  _________   ___________________________
NIGHT DIFF: ________  _________   ___________________________
                          *** HOURLY RATES ***
ADJ BASIC:             OT:              ND:         SD:              HD:
  WG SH 2:        WG SH 3:        HEAD AGENCY:   AVAIL:         LOC PAY:
-------------------------------------------------------------------------------
FUNCTIONS:       C= CHANGE      N= NAME SEARCH      R= RETRIEVE      S= SUSPEND
 PF1= HELP          PF3= PREV SCREEN         PF5= MAIN MENU       PF7= BACKWARD
 PF8= FORWARD       PF9= QREG                PF12= END
```

Earnings and Refunds Adjustments - ADJ (Page 1)

```
COMMAND: ________                    NPPS
NAO1211             EARNINGS AND REFUNDS ADJUSTMENTS - ADJ   2 OF 2
-------------------------------------------------------------------------------
     SSN      PAYBLK   FUNC           LAST NAME                FIRST NAME    I
 ___ __ ____             R           ______________________   ____________  _
 EARNINGS     HOURS    AMOUNT          REMARKS                 CURRENT PP B/W
FF/LE PREM:           _________   ___________________________  BASE:
FORGN DIFF:           _________   ___________________________  GROSS:
EIC:                  _________   ___________________________  PAID FLSA:
COLA:                 _________   ___________________________  STAT CUT:
SUPER DIFF:           _________   ___________________________  EIC PYMT:
RET ALLOW:            _________   ___________________________
STAFF DIFF:           _________   ___________________________
AUO:                  _________   ___________________________
AVAILABILITY PAY:     _________   ___________________________

                                                 HAZARDOUS TABLE CODE:  _
-------------------------------------------------------------------------------
FUNCTIONS:       C= CHANGE      N= NAME SEARCH      R= RETRIEVE      S= SUSPEND
 PF1= HELP          PF3= PREV SCREEN         PF5= MAIN MENU       PF7= BACKWARD
 PF8= FORWARD       PF9= QREG                PF12= END
```

Earnings and Refunds Adjustments - ADJ (Page 2)

DESCRIPTION AND EXECUTION

The Earnings and Refunds Adjustments (ADJ) templates are used to adjust an employee's earnings due to that employee for one pay period. If hours are entered with no amount, the amount of the adjustment will be computed using the appropriate hourly rate. If the amount is already present and the hours are changed, the amount must be blanked out in order for the system to recompute the amount. The hours will not be recomputed based on a change in the amount. A Hazardous Rate Code must be entered if an employee is to receive hazardous pay.

Steps to Reach Earnings and Refunds Adjustments

1. At the Main Menu, select **2** - Payroll.
2. At the Payroll Main Menu, select **2** - MER.
3. At the Master Employee Record Data Entry Menu, select **1** - Master Selection MER Menu.
4. At the Master Selection MER Menu, select **14** - Earnings and Refunds Adjustments.

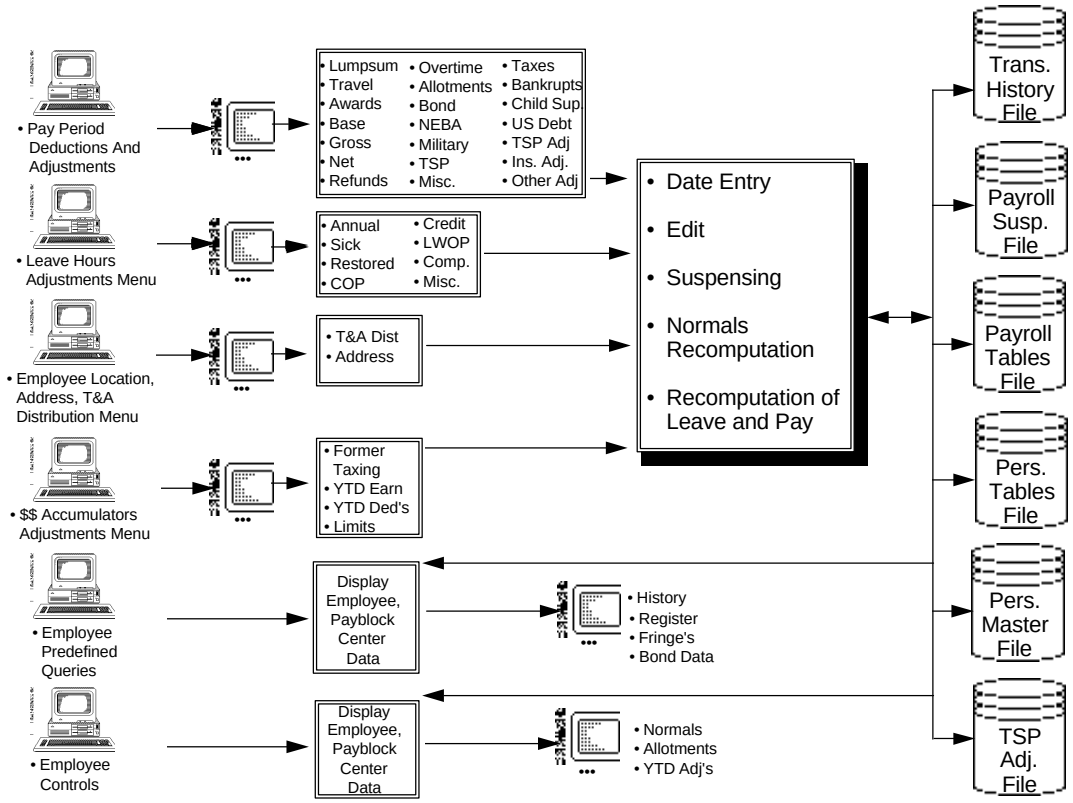
• Pay Period Deductions And Adjustments
• Lumpsum
• Travel
• Awards
• Base
• Gross
• Net
• Refunds
• Overtime
• Allotments
• Bond
• NEBA
• Military
• TSP
• Misc.
• Taxes
• Bankrupts
• Child Sup
• US Debt
• TSP Adj
• Ins. Adj.
• Other Adj
• Leave Hours Adjustments Menu
• Annual
• Sick
• Restored
• COP
• Credit
• LWOP
• Comp.
• Misc.
• Employee Location, Address, T&A Distribution Menu
• T&A Dist
• Address
• $$ Accumulators Adjustments Menu
• Former Taxing
• YTD Earn
• YTD Ded's
• Limits
• Date Entry
• Edit
• Suspensing
• Normals Recomputation
• Recomputation of Leave and Pay
Trans. History File
Payroll Susp. File
Payroll Tables File
Pers. Tables File
Pers. Master File
TSP Adj. File
• Employee Predefined Queries
Display Employee, Payblock Center Data
• History
• Register
• Fringe's
• Bond Data
• Employee Controls
Display Employee, Payblock Center Data
• Normals
• Allotments
• YTD Adj's

4.2.2.2.2 COLA and Foreign Differential

```
COMMAND: ________                    NPPS
NAO1213              COLA AND FOREIGN DIFFERENTIAL - COLA
--------------------------------------------------------------------------------


    SSN      PAYBLK   FUNC            LAST NAME                FIRST NAME    I
___ __ ____    __       R             _______________________  ____________  _



    COST OF LIVING ALLOWANCE                 FOREIGN DIFFERENTIAL

  RATE         BIWEEKLY AMOUNT                       RATE

 ______                                            ______



--------------------------------------------------------------------------------
FUNCTIONS:       C= CHANGE      N= NAME SEARCH      R= RETRIEVE      S= SUSPEND
 PF1= HELP          PF3= PREV SCREEN   PF4= QNORM            PF5= MAIN MENU
 PF9= QREG          PF12= END
```

COLA and Foreign Differential (COLA)

DESCRIPTION AND EXECUTION

The COLA and Foreign Differential (COLA) template is used to display (or establish) and update an employee's COLA and Foreign Differential rate for each pay period.

<u>Steps to Reach COLA and Foreign Differential</u>

1. At the Main Menu, select **2** - Payroll.
2. At the Payroll Main Menu, select **2** - MER.
3. At the Master Employee Record Data Entry Menu, select **1** - Master Selection MER Menu.
4. At the Master Selection MER Menu, select **15** - COLA and Foreign Differential.

4.2.2.2.3 Current TSP Adjustments

```
COMMAND: ________                    NPPS
NAO1261                 CURRENT TSP ADJUSTMENTS - TSPADJ
-------------------------------------------------------------------------------
     SSN       PAYBLK   FUNC          LAST NAME                FIRST NAME    I
 ___ __ ____             _           ______________________  ____________  _

RETIRE PLAN:                  TSP STATUS:            ADJUSTMENT TYPE: __
EFF PAY DATE: _____0                                   (11, 21, 41)
          G FUND       F FUND       C FUND       TOTAL          YEAR-TO-DATE
EMP ADJ: ________0.00 ________0.00 ________0.00         0.00  EMP:         0.00
GB ADJ:  ________0.00 ________0.00 ________0.00         0.00  GB:          0.00
GM ADJ:  ________0.00 ________0.00 ________0.00         0.00  GM:          0.00
 TOTAL:          0.00         0.00         0.00         0.00

---------- CURRENT PAY PERIOD ADJUSTMENT SUMMARY, TSP TYPE 21 OR 41 -----------
EMP ADJ:         0.00         0.00         0.00         0.00
GB ADJ:          0.00         0.00         0.00         0.00
GM ADJ:          0.00         0.00         0.00         0.00
 TOTAL:          0.00         0.00         0.00         0.00
-------------------------------------------------------------------------------
 FUNC:   A= ADD   C= CHG   D= DEL   N= NAME SEARCH   R= RETRIEVE   S= SUSPEND
 PF1= HELP   PF3= PREV   PF5= MAIN   PF7= UP   PF8= DWN   PF9= QREG   PF12= END
```

Current TSP Adjustments (TSPADJ)

DESCRIPTION AND EXECUTION

The Current TSP Adjustments (TSPADJ) template is used to make current period adjustments to an employee's TSP deduction and to create resubmissions of prior period TSP records that were rejected by the National Finance Center. Three adjustment types are allowed, corresponding to the three TSP record types, 11, 21, and 41.

The 11 adjustment is a positive adjustment that is used to deduct and submit amounts omitted in prior periods. A TSP record type 11 will be generated to include this adjustment amount added to the current period TSP deduction, if any. The EFF PAY DATE field will be automatically loaded for 11 adjustments with the current value of TSP Effdate found on the CTLPAY template. The amount of the 11 adjustment will reduce the employee's net pay.

The 21 adjustment is a negative adjustment used to refund deductions taken erroneously and submitted in prior periods. Up to 26 adjustments may be entered in the current period. Each adjustment must have a valid pay date for the current year in the EFF PAY DATE field. If supporting payroll history data is present for the prior pay period being adjusted, the 21 adjustment amount must not be greater than the TSP deduction plus TSP adjustment taken in the effective period. If history data is not present, no edit for this condition is done.

The 41 adjustment is a positive adjustment used to create TSP record type 41 records to resubmit previously rejected TSP record type 11s. Up to 26 adjustments may be entered in the current period. Each adjustment must have a

valid pay date for the current year in the EFF PAY DATE field. Forty-one adjustments do not affect employee net pay.

Steps to Reach Current TSP Adjustments

1. At the Main Menu, select **2** - Payroll.
2. At the Payroll Main Menu, select **2** - MER.
3. At the Master Employee Record Data Entry Menu, select **1** - Master Selection MER Menu.
4. At the Master Selection MER Menu, select **16** - Current TSP Adjustments.

4.2.2.2.4 Employee Insurance Adjustments

```
COMMAND: ________                    NPPS
NAO1262            EMPLOYEE INSURANCE ADJUSTMENTS - INSADJ   1 OF 2
--------------------------------------------------------------------------------

     SSN      PAYBLK   FUNC            LAST NAME                FIRST NAME    I
 ___ __ ____             _            ______________________  ____________  _


PLAN     FEHB          EMPLOYEE     GOVT                     REMARKS
         CODE           AMOUNT     AMOUNT

CURRENT                ________   ________          __________________________

PRIOR     ___          ________   ________          __________________________

CASH
COLLECT   ___           _______    _______          __________________________

--------------------------------------------------------------------------------
FUNCTIONS:     C= CHANGE        N= NAME SEARCH      R= RETRIEVE    S= SUSPEND
 PF1= HELP          PF3= PREV SCREEN     PF4= QNORM            PF5= MAIN MENU
 PF7= BACKWARD      PF8= FORWARD         PF9= QREG             PF12= END
```

Employee Insurance Adjustments - INSADJ (Page 1)

```
COMMAND: ________                    NPPS
NAO1262            EMPLOYEE INSURANCE ADJUSTMENTS - INSADJ   2 OF 2
--------------------------------------------------------------------------------

     SSN      PAYBLK   FUNC            LAST NAME                FIRST NAME    I
 ___ __ ____             R            ______________________  ____________  _

                                                             REMARKS
FEGLI GOVT CONT ADJUSTMENT:     ____________
FEGLI BASIC LIFE ADJUSTMENT:    ____________
FEGLI STAND OPTION A ADJUST:    ____________
FEGLI STAND OPTION B ADJUST:    ____________
FEGLI FAMILY ADJUSTMENT:        ____________            ______________________

FEGLI EMP DEDUCTION ADJUSTMENT:

           4-DAY RULE PERCENT:                      BIRTH DATE:

--------------------------------------------------------------------------------
FUNCTIONS:       C= CHANGE      N= NAME SEARCH      R= RETRIEVE     S= SUSPEND
 PF1= HELP          PF3= PREV SCREEN     PF4= QNORM            PF5= MAIN MENU
 PF7= BACKWARD      PF8= FORWARD         PF9= QREG             PF12= END
```

Employee Insurance Adjustments - INSADJ (Page 2)

DESCRIPTION AND EXECUTION

The Employee Insurance Adjustments (INSADJ) template is used to make adjustments to an employee's net pay for life insurance (FEGLI) and health benefits (FEHB). This template is also used to record FEHB cash collections for vouchering purposes.

Steps to Reach Employee Insurance Adjustments

1. At the Main Menu, select **2** - Payroll.
2. At the Payroll Main Menu, select **2** - MER.
3. At the Master Employee Record Data Entry Menu, select **1** - Master Selection MER Menu.
4. At the Master Selection MER Menu, select **17** - Employee Insurance Adjustments.

DESCRIPTION OF DATA PROCESSING RESULTS AND OUTPUT

A positive adjustment on this template will result in a collection from the employee or an increase in the government contribution. A negative adjustment has the opposite result.

The T&A process updates the 4-Day Rule Percent field, which is used for only two events: the hire of a new employee or the termination of an employee. This value is for the current pay period only and is reset to a blank during the initialization process for the next pay period.

4.2.2.2.5 Other Deductions Adjustments

```
COMMAND: ________                    NPPS
NAO1263         EMPLOYEE RETIREMENT ADJUSTMENTS - OTHADJ    1 OF 3
--------------------------------------------------------------------------------

     SSN      PAYBLK   FUNC            LAST NAME                FIRST NAME    I
 ___ __ ____            _             ______________________  ____________  _
RETIREMENT PLAN         EMPLOYEE       GOVERNMENT            REMARKS
                         AMOUNT         AMOUNT
 CURRENT PLAN:          ____________   ____________   ___________________________
 FORMER PLAN:           ____________   ____________   ___________________________
 FORMER PLAN CODE:  _
 CIVIL SERVICE CREDIT: ____________                   ___________________________
           WAGES
 FICA
  ADJ:  ____________   ____________   ____________   ___________________________
 HIT
  ADJ:  ____________   ____________   ____________   ___________________________
 RETIREMENT PLAN CODE

--------------------------------------------------------------------------------
FUNCTIONS:    C= CHANGE       N= NAME SEARCH    R= RETRIEVE    S= SUSPEND
 PF1= HELP           PF3= PREV SCREEN     PF5= MAIN MENU       PF6= QYTDADJ
 PF7= BACKWARD       PF8= FORWARD         PF9= QREG            PF12= END
```

Other Deductions Adjustments - OTHADJ (Page 1)

```
COMMAND: ________                    NPPS
NAO1263            TAX WITHHOLDING ADJUSTMENTS - OTHADJ     2 OF 3
--------------------------------------------------------------------------------
     SSN      PAYBLK   FUNC            LAST NAME                FIRST NAME    I
 ___ __ ____             R            ______________________  ____________  _

TAXING ENTITY                 AMOUNT                       REMARKS

 FEDERAL:                   ____________           ___________________________
 CURRENT STATE:             ____________           ___________________________
 FORMER STATE:              ____________           ___________________________
 FORMER STATE CODE:  __
 CURRENT CITY:              ____________           ___________________________
 FORMER CITY:               ____________           ___________________________
 FORMER CITY CODE:   ___    ____________           ___________________________
 CURRENT COUNTY:            ____________           ___________________________
--------------------------------------------------------------------------------
FUNCTIONS:    C= CHANGE       N= NAME SEARCH    R= RETRIEVE    S= SUSPEND
 PF1= HELP           PF3= PREV SCREEN     PF5= MAIN MENU       PF6= QYTDADJ
 PF7= BACKWARD       PF8= FORWARD         PF9= QREG            PF12= END
```

Other Deductions Adjustments - OTHADJ (Page 2)

```
COMMAND: ________                    NPPS
NAO1263                  OTHER ADJUSTMENTS - OTHADJ          3 OF 3
--------------------------------------------------------------------------------
     SSN      PAYBLK   FUNC            LAST NAME                FIRST NAME    I
 ___ __ ____            _             ______________________  ____________  _

                        EMPLOYEE AMT   GOVT AMT               REMARKS
 ADVANCE PAY DED:      ____________                    ___________________________
 BILL OF COLLECT:      ____________                    ___________________________
 CFC:                  ____________                    ___________________________
 CSRS SALARY OFFSET:                  _____________   ___________________________
 FERS SALARY OFFSET:                  _____________   ___________________________
 TSP LOAN 1:           ____________                    ___________________________
 TSP LOAN 2:           ____________                    ___________________________
 UNION DUES:           ____________                    ___________________________
           RETIREMENT PLAN CODE:             ANNUITANT INDICATOR:
           SALARY OFFSET:
--------------------------------------------------------------------------------
FUNCTIONS:    C= CHANGE       N= NAME SEARCH    R= RETRIEVE    S= SUSPEND
 PF1= HELP           PF3= PREV SCREEN     PF5= MAIN MENU       PF6= QYTDADJ
 PF7= BACKWARD       PF8= FORWARD         PF9= QREG            PF12= END
```

Other Deductions Adjustments - OTHADJ (Page 3)

DESCRIPTION AND EXECUTION

The Other Deductions Adjustments (OTHADJ) template is used to make adjustments to an employee's net pay for items listed on the screen.

<u>Steps to Reach Other Deductions Adjustments</u>

1. At the Main Menu, select **2** - Payroll.
2. At the Payroll Main Menu, select **2** - MER.
3. At the Master Employee Record Data Entry Menu, select **1** - Master Selection MER Menu.
4. At the Master Selection MER Menu, select **18** - Other Deductions Adjustments.

NPPS uses three screens to display the list of Other Deduction Adjustments. When you request this template, NPPS will always display the first screen. You may move forward by pressing **PF8** and backward by pressing **PF7**.

DESCRIPTION OF DATA PROCESSING OUTPUT AND RESULTS

A positive adjustment on this template will result in a collection from the employee or an increase in the government contribution. A negative adjustment has the opposite result.

4.2.2.2.6 Lump Sum Leave/Reactivations

```
COMMAND: ________                    NPPS
NAO1270               LUMP SUM LEAVE/REACTIVATIONS - LUMP

--------------------------------------------------------------------------------

     SSN      PAYBLK   FUNC            LAST NAME                FIRST NAME    I
 ___ __ ____     __       R            _______________________  ____________  _
ENTER R TO REACTIVATE INACTIVE EMPLOYEE:  _
     **** ADJUSTMENTS ****                  **** CURRENT PAY PERIOD B/W ****
LUMP SUM LEAVE HOURS 1:     _______           BASE EARNINGS:
HOURLY RATE 1:               ______           GROSS EARNINGS:
COMPUTED EARNINGS 1:                                 PAID FLSA:
LUMP SUM LEAVE HOURS 2:     _______           NET EARNINGS:
HOURLY RATE 2:               ______           STAT CUTBACK:
COMPUTED EARNINGS 2:                          CURRENT EIC PYMT:
ENTER Y TO DEDUCT 28% FED TAX:   _
PRIOR PERIOD ADJ:  _______
                                         RESTORED HOURS:  _______
       SEPARATION DATE:  _______      NOAC: ___       DUTY STATUS: _

--------------------------------------------------------------------------------
FUNCTIONS:   A= ADD CHN   C= CHANGE   N= NAME SEARCH   R= RETRIEVE   S= SUSPEND
 PF1= HELP          PF3= PREV SCREEN   PF5= MAIN MENU        PF9= QREG
 PF12= END
```

Lump Sum Leave/Reactivations (LUMP)

DESCRIPTION AND EXECUTION

The Lump Sum Leave/Reactivations (LUMP) template is used to change an employee's status to reactivated or to establish and change lump sum leave adjustments. The Lump Sum Leave hourly rates are determined and input by the pay clerk. NPPS will then compute the correct amount of pay. If a "Y" is entered to deduct 28 percent federal tax on the lump sum leave payment, the federal tax on regular pay is computed using the tax table and the 28 percent on the lump sum is added. Otherwise, the tax table and the employee's W-4 will be used to compute the tax withholding amounts for the lump sum amount along with the regular gross earnings. Use of the Prior Period Adj function will result in pay for the employee. Reactivation is for the current pay period only and is required to pay lump sum earnings for an employee terminated in a prior period (Duty Status = "Z" and Reactivation Indicator = 3). A reactivated employee's net pay will be computed when the employee's lump sum leave transaction is entered. Lump sum pay for an employee terminating in the current pay period (Duty Status = "Z" and Reactivation Indicator = 0) will be computed when the employee's T&A transaction is entered. If the terminating employee's termination date is prior to the current pay period, the lump sum pay will be computed when the transaction is entered.

Steps to Reach Lump Sum Leave/Reactivations

1. At the Main Menu, select **2** - Payroll.
2. At the Payroll Main Menu, select **2** - MER.
3. At the Master Employee Record Data Entry Menu, select **1** - Master Selection MER Menu.
4. At the Master Selection MER Menu, select **19** - Lump Sum Leave/ Reactivations.

4.2.2.2.7 PCS Travel Adjustment B/W

```
COMMAND: ________                    NPPS
NAO1280                 PCS TRAVEL ADJUSTMENT B/W - PCS
--------------------------------------------------------------------------------

     SSN      PAYBLK   FUNC            LAST NAME                FIRST NAME    I
 ___ __ ____    __       R             _______________________  ____________  _


  PCS EARNINGS NOT-SUBJ-TAX:      ___________
  PCS SUBJ-FED-TAX:               ___________
  PCS SUBJ-STATE-TAX:             ___________
  PCS SUBJ-CITY-TAX:              ___________
  PCS SUBJ-COUNTY-TAX:            ___________
  PCS HIT EARNINGS:               ___________
  PCS FICA EARNINGS:              ___________
  PCS FEDERAL TAX WH:             ___________
  PCS HIT WH:                     ___________
  PCS FICA WH:                    ___________
  PCS STATE TAX WH:               ___________
  PCS CITY TAX WH:                ___________
  PCS COUNTY TAX WH:              ___________


--------------------------------------------------------------------------------
FUNCTIONS:       C= CHANGE      N= NAME SEARCH      R= RETRIEVE      S= SUSPEND
 PF1= HELP          PF3= PREV SCREEN   PF5= MAIN MENU        PF12= END
```

PCS Travel Adjustment B/W (PCS)

DESCRIPTION AND EXECUTION

The PCS Travel Adjustment B/W (PCS) template is used to establish an employee's PCS travel amounts for the current pay period. The corresponding accumulation will be automatically updated.

<u>Steps to Reach PCS Travel Adjustment B/W</u>

1. At the Main Menu, select **2** - Payroll.
2. At the Payroll Main Menu, select **2** - MER.
3. At the Master Employee Record Data Entry Menu, select **1** - Master Selection MER Menu.
4. At the Master Selection MER Menu, select **20** - PCS Travel Adjustment B/W.

4.2.2.2.8 Annual Leave

```
*  SPECIFY SSN OR FUNCTION = N 'NAME SEARCH'


COMMAND: ________                    NPPS
NAO1310                        ANNUAL LEAVE - AL
-------------------------------------------------------------------------------
     SSN      PAYBLK   FUNC            LAST NAME                FIRST NAME    I
 ___ __ ____            R             _______________________  _____________  _
  PRIOR YEAR CARRY-OVER: ________    PRIOR PP DATE: ______    CEILING: ________
  ACCRUED YTD:           ____        DISALLOW ADVANCE LEAVE:       _
  USED YTD:              ________    (ENTER Y IF EMPLOYEE SHOULD NOT
  RIC YTD:               ____          RECEIVE ADVANCE ANNUAL LEAVE)
  RESTRICTED CURR BAL:               YTD ACCRUAL WHILE SES:  ___
  LEAVE DONATED YTD:     ________
  DONATED RETURNED YTD:  ________      (TOTAL PROJ) (DONATED BAL)   (TOTAL AL)
  ACCR AVAILABLE:                     +             +             =
  PT HOURS CARRY-OVER:     ______
DATE LAST CHANGED:             AL LEAVE CATEGORY:       HRS ACCRUAL PER     HRS
***************************** CURRENT PAY PERIOD ******************************
 EARNED:             DONAT RETURN:          USED:           PROJ USED:
    RIC:        EARNED RESTRICTED:                        DONATED USED:
-------------------------------------------------------------------------------
FUNCTIONS:    A= ADD CHN      C= CHANGE      N= NAME SEARCH      R= RETRIEVE
 PF1= HELP          PF3= PREV SCREEN   PF5= MAIN MENU        PF12= END
```

Annual Leave (AL)

DESCRIPTION AND EXECUTION

The Annual Leave (AL) template is used to display and update an employee's annual leave YTD information. A "Y" in the Disallow Advance Leave field allows an employee to use only earned annual leave and not the advanced annual leave. During the personnel mature process, this field will be set to "Y" when Duty Status changes from any value to "Y." While an employee is in transferred leave status, (Total Proj) will show a zero value. The balance shown in the Restricted Curr Bal field will become zero the pay period after the cancellation of the medical emergency and the (Total Proj) field will assume its normal value. The YTD Accrual While SES field accumulates annual leave earned after the SES appointment during the same leave year the appointment was made. This allows NPPS to determine the annual leave balance subject to the annual leave ceiling at year-end.

<u>Steps to Reach Annual Leave</u>

1. At the Main Menu, select **2** - Payroll.
2. At the Payroll Main Menu, select **2** - MER.
3. At the Master Employee Record Data Entry Menu, select **1** - Master Selection MER Menu.
4. At the Master Selection MER Menu, select **21** - Annual Leave.

4.2.2.2.9 Compensatory Time

```
*   SPECIFY SSN OR FUNCTION = N 'NAME SEARCH'


COMMAND: ________                    NPPS
NAO1320                     COMPENSATORY TIME - CT
-------------------------------------------------------------------------------
     SSN      PAYBLK   FUNC            LAST NAME                FIRST NAME    I
 ___ __ ____            R              ______________________  _____________  _
PRIOR PP DATE: ______
                     *******  COMPENSATORY HOURS  *******          PYCO BALANCE
                   EARNED     USED    FORFEITED   PAID       CUT     ________
PRIMARY CUR HOURS:
EXTENDED CUR HRS:
PRIMARY YTD HOURS: _______   _______   _______   _______   _______
EXTENDED YTD HRS:            _______   _______
   PERIOD-1.1 PERIOD-1.2 PERIOD-1.3 PERIOD-1.4 PERIOD-1.5 PERIOD-1.6 PERIOD-1.7
     _______    _______    _______    _______    _______    _______    _______
RATE:  _____      _____      _____      _____      _____      _____      _____
                         PRIMARY CT BALANCE
                        EXTENDED CT BALANCE
                         TOTAL AVAILABLE CT
-------------------------------------------------------------------------------
FUNCTIONS:    A= ADD CHN      C= CHANGE      N= NAME SEARCH      R= RETRIEVE
 PF1= HELP          PF3= PREV SCREEN       PF5= MAIN MENU        PF12= END
```

Compensatory Time (CT)

DESCRIPTION AND EXECUTION

The Compensatory Time (CT) template is used to display and update an employee's compensatory time information. The system automatically places the compensatory time earned in the Period-1.1 field along with the employee's current overtime pay rate per hour. If these CT hours are not used, they will automatically be moved to the next Period "bucket," along with the associated pay rate, when each pay period is processed. After seven periods, if the employee is an FLSA employee, the hours will be paid to the employee at the associated rate of pay. If the employee is not an FLSA employee, the hours will be forfeited from Period-1.7 and a forfeited CT record will be written. This forfeited CT record may have the time permitted for use by an employee extended by changing the Extended Thru Date using the EXTCT and MASEXTCT templates.

Refer to the Description and Execution sections of the EXTCT and MASEXTCT templates.

The total primary CT balance available, a totaling of the seven CT period "buckets," is shown on the CT screen along with the total extended CT balance available from all of an employee's extended CT records. These two totals are then, in turn, totaled together at the bottom of the screen.

Steps to Reach Compensatory Time

1. At the Main Menu, select **2** - Payroll.
2. At the Payroll Main Menu, select **2** - MER.
3. At the Master Employee Record Data Entry Menu, select **1** - Master Selection MER Menu.
4. At the Master Selection MER Menu, select **22** - Compensatory Time.

4.2.2.2.10 Religious Compensatory Time

```
*   SPECIFY SSN OR FUNCTION = N 'NAME SEARCH'


COMMAND: ________                    NPPS
NAO1330                RELIGIOUS COMPENSATORY TIME - RCT
-------------------------------------------------------------------------------

     SSN      PAYBLK   FUNC            LAST NAME                FIRST NAME    I
___ __ ____             R             _______________________  _____________  _

 PRIOR PP DATE: ______
                              ****  COMPENSATORY HOURS ****
                              EARNED      USED    FORFEITED
            CURRENT HOURS:
            HOURS YTD:        _______    _______    _______
            BALANCE:

PERIOD-1.1 PERIOD-1.2 PERIOD-1.3 PERIOD-1.4 PERIOD-1.5 PERIOD-1.6 PERIOD-1.7
________   ________   ________   ________   ________   ________   ________


-------------------------------------------------------------------------------
FUNCTIONS:      A= ADD CHN      C= CHANGE      N= NAME SEARCH      R= RETRIEVE
 PF1= HELP        PF3= PREV SCREEN        PF5= MAIN MENU        PF12= END
```

Religious Compensatory Time (RCT)

DESCRIPTION AND EXECUTION

The Religious Compensatory Time (RCT) template is used to display and update an employee's religious compensatory time information. The system automatically places the religious compensatory time earned in Period-1.1, and automatically moves one period each pay period unless it is used. After seven periods, the hours are lost. If religious compensatory time is taken before it is earned, the hours are placed in Period-1.1 with a negative sign. The hours will remain there until sufficient earned hours offset the negative balance to zero.

<u>Steps to Reach Religious Compensatory Time</u>

1. At the Main Menu, select **2** - Payroll.
2. At the Payroll Main Menu, select **2** - MER.
3. At the Master Employee Record Data Entry Menu, select **1** - Master Selection MER Menu.
4. At the Master Selection MER Menu, select **23** - Religious Compensatory Time.

4.2.2.2.11 Credit Hours

```
*   SPECIFY SSN OR FUNCTION = N 'NAME SEARCH'


COMMAND: ________                    NPPS
NAO1340                      CREDIT HOURS - CREDIT
-------------------------------------------------------------------------------
     SSN      PAYBLK   FUNC            LAST NAME                FIRST NAME    I
 ___ __ ____            R             _______________________  ____________  _

PRIOR PP DATE: ______
                         PYCO:             ________
                         EARNED YTD:        _______
                         USED YTD:          _______
                         FORFEITED YTD:     _______
                         BALANCE:

             FLEXI TOUR (Y OR BLANK):  _

***************************** CURRENT PAY PERIOD *****************************

           EARNED:            USED:              FORFEITED:
-------------------------------------------------------------------------------
FUNCTIONS:      A= ADD CHN      C= CHANGE      N= NAME SEARCH      R= RETRIEVE
 PF1= HELP        PF3= PREV SCREEN        PF5= MAIN MENU        PF12= END
```

Credit Hours (CREDIT)

DESCRIPTION AND EXECUTION

The Credit Hours (CREDIT) template is used to display and update an employee's credit hour information. Credit hours are earned only by employees on Flexi Tour.

<u>Steps to Reach Credit Hours</u>

1. At the Main Menu, select **2** - Payroll.
2. At the Payroll Main Menu, select **2** - MER.
3. At the Master Employee Record Data Entry Menu, select **1** - Master Selection MER Menu.
4. At the Master Selection MER Menu, select **24** - Credit Hours.

4.2.2.2.12 Leave Without Pay Hours

```
*   SPECIFY SSN OR FUNCTION = N 'NAME SEARCH'


COMMAND: ________                    NPPS
NAO1350                 LEAVE WITHOUT PAY HOURS - LWOP
-------------------------------------------------------------------------------

     SSN      PAYBLK   FUNC            LAST NAME                FIRST NAME    I
 ___ __ ____             R             ______________________  ____________  _

PRIOR PP DATE: ______
                        LWOP USED YTD:        _______
                        SCD HOURS:            _______
                        WIG HOURS:            _______
                        WIG EXCESS HOURS:     _______
                        EIGHTY-HOUR ACCRUAL:  _______
                        CURRENT PP LWOP:


   NTE DATE:                                  PART TIME HOURS:
   GRADE:                                     STEP:
-------------------------------------------------------------------------------
FUNCTIONS:      A= ADD CHN      C= CHANGE      N= NAME SEARCH      R= RETRIEVE
 PF1= HELP          PF3= PREV SCREEN   PF5= MAIN MENU        PF12= END
```

Leave Without Pay Hours (LWOP)

DESCRIPTION AND EXECUTION

The Leave Without Pay Hours (LWOP) template is used to display and update an employee's LWOP information.

<u>Steps to Reach Leave Without Pay Hours</u>

1. At the Main Menu, select **2** - Payroll.
2. At the Payroll Main Menu, select **2** - MER.
3. At the Master Employee Record Data Entry Menu, select **1** - Master Selection MER Menu.
4. At the Master Selection MER Menu, select **25** - Leave Without Pay Hours.

4.2.2.2.13 Restored Leave

```
*   SPECIFY SSN OR FUNCTION = N 'NAME SEARCH'


 COMMAND: ________                    NPPS
 NAO1360                     RESTORED LEAVE - RESTLV
 ------------------------------------------------------------------------------
      SSN     PAYBLK FUNC  LAST NAME             FIRST NAME   I   PRIOR PP DATE
  ___ __ ____         R   ____________________ ____________ _     ________
              ************ RESTORED *************  ********** USED ***********
 ACCT EXPIRE  A   HOURS    B  HOURS    C  HOURS     CURR       YTD       CUM
  1  ________  _  _______  _  _______  _  _______            _______   _______
  2  ________  _  _______  _  _______  _  _______            _______   _______
  3  ________  _  _______  _  _______  _  _______            _______   _______
                                              TOTAL
 PYCO RESTORED HRS: _______     RESTORED YTD: _______      BALANCE:
                   ******** DONATED ********     **** DONATED RETURNED ****
 ACCT   EXPIRE        CURR            CUM           CURR            CUM
  1                                 _______                        _______
  2                                 _______                        _______
  3                                 _______                        _______
               DONATED YTD: _______     DONATED RETD YTD: _______
 ------------------------------------------------------------------------------
 FUNCTIONS:      A= ADD CHN      C= CHANGE      N= NAME SEARCH      R= RETRIEVE
  PF1= HELP          PF3= PREV SCREEN          PF5= MAIN MENU          PF12= END
```

Restored Leave (RESTLV)

DESCRIPTION AND EXECUTION

The Restored Leave (RESTLV) template is used to display and update an employee's restored leave information for up to three separate accounts. Each account can have up to three types of reasons for restoration of annual leave (e.g., illness or administrative error).

<u>Steps to Reach Restored Leave</u>

1. At the Main Menu, select **2** - Payroll.
2. At the Payroll Main Menu, select **2** - MER.
3. At the Master Employee Record Data Entry Menu, select **1** - Master Selection MER Menu.
4. At the Master Selection MER Menu, select **26** - Restored Leave.

The balance of the three accounts is computed as follows:
Hours Restored - Cum Used - Cum Donated + Cum Returned.

4.2.2.2.14 Sick Leave

```
* SPECIFY SSN OR FUNCTION = N 'NAME SEARCH'


 COMMAND: ________                    NPPS
 NAO1370                         SICK LEAVE - SL
 ------------------------------------------------------------------------------
      SSN      PAYBLK   FUNC            LAST NAME                FIRST NAME    I
  ___ __ ____             R             ______________________  ____________  _

 PRIOR PP DATE: ______        ADV TOTAL:      _______    AVAILABLE FOR USE:
  PYCO:         ________      ADV USED CUM:   _______
  ACCRUED YTD:    ___         ADV BALANCE:               ACCR AVAIL:
  USED YTD:      _______      ADV PYCO OWED:  _______    ADV BALANCE:
  RIC YTD:        ___         ADV USED YTD:   _______    ADV EXPIRED:
  RESTRICTED BAL:             ADV REPAID YTD: _______
  ACCR AVAIL:                 ADV BAL OWED:               SICK LV BAL:
                              ADV DATE LIMIT: ________
  PT HOURS CO:    ______
 ***************************** CURRENT PAY PERIOD ******************************
 EARNED:                USED:               RIC:              ADV USED:
 ADV REPAID:                 EARNED RESTRICTED:
 ------------------------------------------------------------------------------
 FUNCTIONS:      A= ADD CHN      C= CHANGE      N= NAME SEARCH      R= RETRIEVE
  PF1= HELP          PF3= PREV SCREEN   PF5= MAIN MENU        PF12= END
```

Sick Leave (SL)

DESCRIPTION AND EXECUTION

The Sick Leave (SL) template is used to display and update an employee's sick leave information.

<u>Steps to Reach Sick Leave</u>

1. At the Main Menu, select **2** - Payroll
2. At the Payroll Main Menu, select **2** - MER.
3. At the Master Employee Record Data Entry Menu, select **1** - Master Selection MER Menu.
4. At the Master Selection MER Menu, select **27** - Sick Leave.

4.2.2.2.15 Continuation of Pay Leave

```
COMMAND: ________                    NPPS
NAO1380                 CONTINUATION OF PAY LEAVE - COP
-------------------------------------------------------------------------------
     SSN      PAYBLK   FUNC            LAST NAME               FIRST NAME    I
 ___ __ ____            _             ______________________  ____________  _

PRIOR PP DATE: ______
              DATE       HOURS      YTD       INJURY
              LIMIT     ALLOWED     USED      TO DATE   BALANCE

INJURY 1:   ________    _______    _______    _______
INJURY 2:   ________    _______    _______    _______
INJURY 3:   ________    _______    _______    _______
                       --------   --------   --------   ---------
       TOTALS:


        TOTAL COP LEAVE PAID YTD: ________       CURRENT B/W COP USED:
-------------------------------------------------------------------------------
FUNCTIONS:   A= ADD CHN   C= CHANGE   N= NAME SEARCH   R= RETRIEVE   S= SUSPEND
 PF1= HELP          PF3= PREV SCREEN   PF5= MAIN MENU        PF12= END
```

Continuation of Pay Leave (COP)

DESCRIPTION AND EXECUTION

The Continuation of Pay Leave (COP) template is used to display and update an employee's Continuation of Pay (COP) information. Up to three injuries and associated information are allowed. The pay clerk must manually adjust the COP hours to the proper account on this template. The individual account fields are totaled for display only. A separate field, Total COP Leave Paid YTD, is provided for information and update since it is not updated from the individual account fields. The Total COP Leave Paid YTD should always be adjusted to equal the sum of the YTD used.

<u>Steps to Reach Continuation of Pay Leave</u>

1. At the Main Menu, select **2** - Payroll.
2. At the Payroll Main Menu, select **2** - MER.
3. At the Master Employee Record Data Entry Menu, select **1** - Master Selection MER Menu.
4. At the Master Selection MER Menu, select **28** - Continuation of Pay Leave.

4.2.2.2.16 Donated Annual Leave

```
COMMAND: ________                    NPPS
NAO1383                 DONATED ANNUAL LEAVE - RECIPIEN
-------------------------------------------------------------------------------
     SSN      PAYBLK   FUNC            LAST NAME                FIRST NAME    I
 ___ __ ____            _             ______________________  _____________  _
EFF DATE: ________   REASON: _    ENDING DATE: ________ TERM DATE: ________
PRIOR PP DATE: ______                                   ........CUM COST.......
                             ******** REMARKS ******** :     DOLLARS     HRS
PYCO:              ________   ________________________ DIR: __________  _______
RECEIVED YTD:      ________   ________________________ IND: __________  _______
USED YTD:          ________   ________________________ -----------------------
RETURNED YTD:      ________   ________________________
BALANCE:                      ________________________    .. DONATED HOURS ..
................RESTRICTED..................              CURRENT    CUMULATIVE
:      CURR EARNED     CURR BAL  TRANSFERED :    RECEIVED:           ________
: ANNUAL:              ________              :        USED:           ________
:   SICK:              ________              :    RETURNED:           ________
:        PROJECTED AL:                       :     DONATED:           ________
-------------------------------------------------------------------------------
FUNCTIONS:  A= ADD CHAIN  C= CHANGE  N= NAME SEARCH  R= RETRIEVE  S= SUSPEND
 PF1= HELP  PF2= MASDONOR   PF3= PREV SCREEN    PF5= MAIN MENU    PF12= END
```

Donated Annual Leave (RECIPIEN)

DESCRIPTION AND EXECUTION

The Donated Annual Leave (RECIPIEN) template is used to display and update an employee's donated leave information. The leave hours are given by fellow employees to those in urgent need of additional leave hours.

This template is used to establish an employee's eligibility to use donated leave, to adjust accumulations, if necessary, and to cancel the eligibility. The Eff Date and Reason must be entered to establish eligibility. An employee may receive (using MASDONOR) donated leave when an effective date and reason code have been entered. Valid reason codes are E (employee related emergency) and F (family related emergency). An employee may use donated leave beginning the pay period inside of which the effective date falls. The last pay period the employee may use donated leave is the pay period in which the Ending Date falls. The last pay period the employee may accept donated leave is the one in which the Term Date falls. During the time that the employee is eligible to use donated leave, advanced annual leave is not allowed. If the Reason Code = E, advanced sick leave will also be disallowed. The pay period accrual of annual leave will be restricted up to 40 hours for full-time employees and up to the employee's weekly scheduled tour of duty for part-time and uncommon tour employees. After 40 hours have been accumulated as restricted leave, additional accruals will be used to reduce any negative annual leave balance to zero. When the annual leave balance is greater than or equal to zero, additional accruals will be available for use and will be used before using any available donated leave balance. If the Reason Code = E, these restrictions will also apply to sick leave. In the pay period after the eligibility for donated leave

has been canceled, the restricted leave will be made available for use. The transfer of the restricted leave from restricted to available for use will be done during the pay period initialization process. Other donated leave processing, such as restricting the accruals, will be processed by the pay and leave computation process when the employee's T&A is entered. The Cum Cost fields are for data entry only. NPPS does not compute values for these fields. The recipient receives donations of annual leave and returns unused donated leave through the MASDONOR template.

Steps to Reach Donated Annual Leave

1. At the Main Menu, select **2** - Payroll.
2. At the Payroll Main Menu, select **2** - MER.
3. At the Master Employee Record Data Entry Menu, select **1** - Master Selection MER Menu.
4. At the Master Selection MER Menu, select **29** - Donated Annual Leave.

4.2.2.2.17 Home Leave

```
COMMAND: ________                    NPPS
NAO1382                        HOME LEAVE - HOMELV
--------------------------------------------------------------------------------


     SSN      PAYBLK   FUNC            LAST NAME                FIRST NAME    I
 ___ __ ____    __       R             _______________________  ____________  _

PRIOR PP DATE: ______

                        HOURS EARNED:              _______
                        HOURS USED (CUM):          _______
                        CURRENT BALANCE:
                        LAST LEAVE ACCRUAL DATE:   ______
                        ACCRUAL RATE:              __
                        HOURS USED YTD:            _______



--------------------------------------------------------------------------------
FUNCTIONS:  A= ADD CHN   C= CHANGE   N= NAME SEARCH   R= RETRIEVE   S= SUSPEND
 PF1= HELP          PF3= PREV SCREEN         PF5= MAIN MENU       PF12= END
```

Home Leave (HOMELV)

DESCRIPTION AND EXECUTION

The Home Leave (HOMELV) template is used to display and update an employee's home leave information. Home leave is earned when an employee's tour is outside the US.

<u>Steps to Reach Home Leave</u>

1. At the Main Menu, select **2** - Payroll.
2. At the Payroll Main Menu, select **2** - MER.
3. At the Master Employee Record Data Entry Menu, select **1** - Master Selection MER Menu.
4. At the Master Selection MER Menu, select **30** - Home Leave.

4.2.2.2.18 Other Leave Used YTD

```
COMMAND: ________                    NPPS
NAO1390                 OTHER LEAVE USED YTD - OTHLV
--------------------------------------------------------------------------------

     SSN      PAYBLK   FUNC            LAST NAME                FIRST NAME    I
 ___ __ ____            _             ______________________  ____________  _

PRIOR PP DATE: ______
                                                   YTD ADMIN:     ________
   ** FYTD MILITARY LEAVE DAYS **                  YTD AWOL:      ________
   PYCO:      ________  CUR PP USED: ________      YTD COURT:     ________
   CUR FY:    ________                             YTD EXCUSED:   ________
   FYTD USED: ________                             YTD GRADUATE:  ________
                                                   YTD HOLIDAY:   ________
   BALANCE:                                        YTD JURY:      ________
                                                   YTD MILITARY:  ________
                                                   YTD SUSPENDED: ________
   CUR PP HRS USED:                                YTD TIME OFF:
--------------------------------------------------------------------------------
FUNCTIONS:  A= ADD CHN   C= CHANGE   N= NAME SEARCH   R= RETRIEVE   S= SUSPEND
 PF1= HELP          PF3= PREV SCREEN        PF5= MAIN MENU      PF12= END
```

Other Leave Used YTD (OTHLV)

DESCRIPTION AND EXECUTION

The Other Leave Used YTD (OTHLV) template is used to display and update an employee's other leave information. These leave hours are not found on the other named leave templates (e.g., jury and administrative leave). Since the control over military leave is in days and NPPS records military leave in hours used, the pay clerk must convert the military leave hours into days on this template. This manual control is necessary since non-duty weekend days may also be counted against the control total.

<u>Steps to Reach Other Leave Used YTD</u>

1. At the Main Menu, select **2** - Payroll.
2. At the Payroll Main Menu, select **2** - MER.
3. At the Master Employee Record Data Entry Menu, select **1** - Master Selection MER Menu.
4. At the Master Selection MER Menu, select **31** - Other Leave Used YTD.

4.2.2.2.19 Time Off Awards

```
COMMAND: ________                    NPPS
NAO1395                       TIME OFF AWARDS - TOA
-------------------------------------------------------------------------------
     SSN     PAYBLK     FUNC           LAST NAME                FIRST NAME    I
 100 00 0001   09        R             FEAKINS_______________   RANDY_______  C

 NTE DATE     AWD HRS    CUR USED   YTD USED   CUM USED   CUR FORF   YTD FORF
                                    _______    _______                _______
                                    _______    _______                _______
                                    _______    _______                _______
                                    _______    _______                _______
                                    _______    _______                _______
                                    _______    _______                _______
                                    _______    _______                _______
                                    _______    _______                _______
                                    _______    _______                _______
                                    _______    _______                _______
    TOTAL
                                       BALANCE
-------------------------------------------------------------------------------
FUNCTIONS:  C= CHANGE           N= NAME SEARCH           R= RETRIEVE
 PF1= HELP         PF3= PREV SCREEN         PF5= MAIN MENU         PF12= END
```

Time Off Awards (TOA)

DESCRIPTION AND EXECUTION

The Time Off Awards (TOA) template is used to retrieve and display the time off award and usage fields for an individual employee. The accumulators for time off used and forfeited may be modified.

<u>Steps to Reach Time Off Awards</u>

1. At the Main Menu, select **2** - Payroll.
2. At the Payroll Main Menu, select **2** - MER.
3. At the Master Employee Record Data Entry Menu, select **1** - Master Selection MER Menu.
4. At the Master Selection MER Menu, select **32** - Time Off Awards.

4.2.2.2.20 Extended Compensatory Time

```
COMMAND: ________                    NPPS
NAO1321                EXTENDED COMPENSATORY TIME - EXTCT
-------------------------------------------------------------------------------
                       EXTENDED      ORIGINAL
     SSN      PAYBLK   THRU DATE     FRFTD DTE      FUNC
___ __ ____            ________      ________         R

LAST NAME                FIRST NAME    I
____________________     ___________   _

     ST    EXTENDED..............................     CUM      CUM
     CD    YEARPP     EARN DTE     RATE    HOURS      USED    FRFTD   BALANCE
            ______    ________    ______   ______    ______

                                             CURRENT    USED     FRFTD


-------------------------------------------------------------------------------
FUNCTION:  A= ADD    C= CHANGE    D= DELETE    N= NAME SEARCH    R= RETRIEVE
 PF1= HELP        PF3= PREV SCREEN         PF5= MAIN MENU        PF12= END
```

Extended Compensatory Time (EXTCT)

DESCRIPTION AND EXECUTION

The Extended Compensatory Time (EXTCT) template is used to display and change information contained in an employee's extended/forfeited CT records. A major purpose of EXTCT is to extend the time an employee is permitted to use compensatory time. When CT hours are forfeited, a record is written with a null Extended Thru Date. This null date, or a previously entered Extended Thru Date, may be extended by typing in a desired future date into this field. The YEARPP field will be calculated from this Extended Thru Date if both the Extended Thru Date and the YEARPP fields are present. If the Extended Thru Date is not present, and the YEARPP field is entered, the Extended Thru Date will be calculated from YEARPP. Updates via EXTCT will not be permitted if the employee has a "good" T&A status at the time the EXTCT update is attempted. Extended/forfeited CT records may be added, changed, or deleted with the use of EXTCT.

Access to an extended/forfeited CT record may be made by entering an employees SSN, the Extended Thru Date, and the Original Frftd Date into the EXTCT template fields. An easier access method is to go first to the MASEXTCT template which will display all records associated with an employee, and then select the record to be processed.

Steps to Reach Extended Compensatory Time

1. At the Main Menu, select **2** - Payroll.
2. At the Payroll Main Menu, select **2** - MER.
3. At the Master Employee Record Data Entry Menu, select **1** - Master Selection MER Menu.
4. At the Master Selection MER Menu, select **33** - Extended Compensatory Time.

4.2.2.2.21 Former State Taxes

```
* SPECIFY SSN OR FUNCTION = N 'NAME SEARCH'

COMMAND: ________                    NPPS
NAO1410                 FORMER STATE TAXES - FORMSTX
-------------------------------------------------------------------------------


     SSN      PAYBLK   FUNC    LAST NAME                FIRST NAME    I
 ___ __ ____             R              _______________________  _____________  _

                            *** YTD FORMER STATE ***
 STATE   GROSS     TSP    TAXABLE    WH         PCS WH  PCS EARN    PCS EARNING
 CODE    EARN      DED    EARNINGS   TAKEN      TAKEN   SUBJ WH     NOT SUBJ
  __    ________  ______  _________  _________  ______  ________    ___________
  __    ________  ______  _________  _________  ______  ________    ___________
  __    ________  ______  _________  _________  ______  ________    ___________

             PCS EARNING NOT SUBJ WH -- ONLY APPLIES TO YTD VALUES


-------------------------------------------------------------------------------
FUNCTIONS:  A= ADD CHN   C= CHANGE   N= NAME SEARCH   R= RETRIEVE   S= SUSPEND
 PF1= HELP          PF3= PREV SCREEN        PF5= MAIN MENU      PF12= END
```

Former State Taxes (FORMSTX)

DESCRIPTION AND EXECUTION

The Former State Taxes (FORMSTX) template is used to change an employee's former state taxes. Former state tax information can be entered for up to three states. Initially, this information is created automatically when an employee changes state taxing entities.

<u>Steps to Reach Former State Taxes</u>

1. At the Main Menu, select **2** - Payroll.
2. At the Payroll Main Menu, select **2** - MER.
3. At the Master Employee Record Data Entry Menu, select **1** - Master Selection MER Menu.
4. At the Master Selection MER Menu, select **34** - Former State Taxes.

4.2.2.2.22 Former City and County Taxes

```
* SPECIFY SSN OR FUNCTION = N 'NAME SEARCH'

COMMAND: ________                    NPPS
NAO1420            FORMER CITY AND COUNTY TAXES - FORMCTX
-------------------------------------------------------------------------------
     SSN      PAYBLK   FUNC            LAST NAME               FIRST NAME    I
 ___ __ ____             R             ______________________  ____________  _


                              *** YTD CITY ***

TAX     GROSS     TSP     TAXABLE     WH     PCS WH    PCS EARN    PCS EARNINGS
CODE    EARN      DED     EARNINGS   TAKEN   TAKEN     SUBJ WH     NOT SUBJ WH
 ___  _________  ______  _________  _____  _______  _________   ____________
 ___  _________  ______  _________  _____  _______  _________   ____________
 ___  _________  ______  _________  _____  _______  _________   ____________

             PCS EARNING NOT SUBJ WH -- ONLY APPLIES TO YTD SALES


-------------------------------------------------------------------------------
FUNCTIONS:  A= ADD CHN   C= CHANGE   N= NAME SEARCH   R= RETRIEVE   S= SUSPEND
 PF1= HELP          PF3= PREV SCREEN     PF5= MAIN MENU      PF12= END
```

Former City and County Taxes (FORMCTX)

DESCRIPTION AND EXECUTION

The Former City and County Taxes (FORMCTX) template is used to change an employee's former city and county taxes. Initially, this information is created automatically when an employee changes city/county taxing entities.

<u>Steps to Reach Former City and County Taxes</u>

1. At the Main Menu, select **2** - Payroll.
2. At the Payroll Main Menu, select **2** - MER.
3. At the Master Employee Record Data Entry Menu, select **1** - Master Selection MER Menu.
4. At the Master Selection MER Menu, select **35** - Former City and County Taxes.

4.2.2.2.23 YTD Earnings and Premium Hours Worked

```
* SPECIFY SSN OR FUNCTION = N 'NAME SEARCH'

COMMAND: ________                    NPPS
NAO1431     YTD EARNINGS AND PREMIUM HOURS WORKED - YTDADJ1  1 OF 5
-------------------------------------------------------------------------------
     SSN      PAYBLK  FUNC            LAST NAME               FIRST NAME    I
 ___ __ ____            R            ______________________  ____________  _
AUO                        BOND REFUND                COLA QTD
  AUO ADJ    ____________   BOND ADJ    ____________   QTD ADJ     ____________
AVAIL PAY                  CITY GROSS                 CNTY GROSS
  AVAIL ADJ  ____________   TAX ADJ     ____________   TAX ADJ     ____________
AWARD YTD                  CITY GRS MTD               CNTY GRS MTD
  YTD ADJ    ____________   MTD ADJ     ____________   MTD ADJ     ____________
AWARD NET                  CITY GRS QTD               CNTY GRS QTD
  NET ADJ    ____________   QTD ADJ     ____________   QTD ADJ     ____________
BASE TRS IN                COLA                       EIC PYMNT
  TR IN ADJ  ____________   COLA ADJ    ____________   EIC ADJ     ____________
BASE
  BASE ADJ   ____________
-------------------------------------------------------------------------------
FUNCTIONS:  A= ADD CHN   C= CHANGE   N= NAME SEARCH   R= RETRIEVE   S= SUSPEND
 PF1= HELP           PF3= PREV SCREEN       PF5= MAIN MENU       PF6= QYTDADJ
 PF7= BACKWARD       PF8= FORWARD           PF12= END
```

YTD Earnings and Premium Hours Worked - YTDADJ1 (Page 1)

```
COMMAND: ________                    NPPS
NAO1431     YTD EARNINGS AND PREMIUM HOURS WORKED - YTDADJ1  2 OF 5
-------------------------------------------------------------------------------
     SSN      PAYBLK  FUNC            LAST NAME               FIRST NAME    I

FERS                       FOREIGN DIFF               HIT QTD
  FERS ADJ   ____________   FOR ADJ    ____________   QTD ADJ     ____________
FICA                       GROSS                      HOLIDAY
  FICA ADJ   ____________   GROSS ADJ  ____________   HOL ADJ     ____________
FICA QTD                   HAZARDOUS                  HOLIDAY HRS
  QTD ADJ    ____________   HAZ ADJ    ____________   HRS ADJ     ____________
FICA TRAN IN               HAZARDOUS HR               LOCAL PAY
  TRS IN     ____________   HRS ADJ    ____________   LOC ADJ     ____________
FIREFIGHTER                HIT                        LOCAL TRS IN
  FIRE ADJ   ____________   HIT ADJ    ____________   TR IN ADJ   ____________


-------------------------------------------------------------------------------
FUNCTIONS:  A= ADD CHN   C= CHANGE   N= NAME SEARCH   R= RETRIEVE   S= SUSPEND
 PF1= HELP           PF3= PREV SCREEN       PF5= MAIN MENU       PF6= QTYDADJ
 PF7= BACKWARD       PF8= FORWARD           PF12= END
```

YTD Earnings and Premium Hours Worked - YTDADJ1 (Page 2)

```
COMMAND: ________                    NPPS
NAO1431     YTD EARNINGS AND PREMIUM HOURS WORKED - YTDADJ1  3 OF 5
-------------------------------------------------------------------------------
     SSN      PAYBLK  FUNC            LAST NAME               FIRST NAME    I
                       R
LUMP SUM LV               OVERTIME HR                PCS NS CNTY
  SUM ADJ    _____________  HR ADJ      _____________  CNTY ADJ    _____________
NET ERNGS                 PCS NS CITY                PCS CNTY
  NET ADJ    _____________  CITY ADJ    _____________  YTD ADJ     _____________
NIGHT DIFF                PCS CITY                   PCS CNTY QTD
  NIGHT ADJ  _____________  YTD ADJ     _____________  QTD ADJ     _____________
NIGHT DI HR               PCS CITY QTD               PCS CNTY MTD
  HR ADJ     _____________  QTD ADJ     _____________  MTD ADJ     _____________
OVERTIME                  PCS CITY MTD               PCS FICA
  OT ADJ     _____________  MTD ADJ     _____________  FICA ADJ    _____________
                                                     PCS FICA QTD
                                                       QTD ADJ     _____________
-------------------------------------------------------------------------------
FUNCTIONS:  A= ADD CHN   C= CHANGE   N= NAME SEARCH   R= RETRIEVE   S= SUSPEND
 PF1= HELP           PF3= PREV SCREEN       PF5= MAIN MENU       PF6= QYTDADJ
 PF7= BACKWARD       PF8= FORWARD           PF12= END
```

YTD Earnings and Premium Hours Worked - YTDADJ1 (Page 3)

```
COMMAND: ________                    NPPS
NAO1431     YTD EARNINGS AND PREMIUM HOURS WORKED - YTDADJ1  4 OF 5
-------------------------------------------------------------------------------
     SSN      PAYBLK  FUNC            LAST NAME               FIRST NAME    I

PCS HIT                   PCS NS FED                 ST GROSS QTD
  HIT ADJ    _____________  FED ADJ     _____________  QTD ADJ    _____________
PCS HIT QTD               PCS FED                    STAFF DIFF
  QTD ADJ    _____________  YTD ADJ     _____________  STF ADJ    _____________
PCS NS STATE              PCS FED QTD                STATUTORY CT
  ST ADJ     _____________  QTD ADJ     _____________  CT ADJ     _____________
PCS STATE                 RETEN ALLOW                SUNDAY DIFF
  YTD ADJ    _____________  ALLOW ADJ   _____________  SUNDAY ADJ  _____________
PCS ST QTD                STATE GROSS                SUN DIF HR
  QTD ADJ    _____________  TAX ADJ     _____________  DIFF HR    _____________
PCS ST MTD                ST GROSS MTD
  MTD ADJ    _____________  MTD ADJ     _____________


-------------------------------------------------------------------------------
FUNCTIONS:  A= ADD CHN   C= CHANGE   N= NAME SEARCH   R= RETRIEVE   S= SUSPEND
 PF1= HELP           PF3= PREV SCREEN       PF5= MAIN MENU       PF6= QYTDADJ
 PF7= BACKWARD       PF8= FORWARD           PF12= END
```

YTD Earnings and Premium Hours Worked - YTDADJ1 (Page 4)

```
COMMAND: ________                    NPPS
NAO1431     YTD EARNINGS AND PREMIUM HOURS WORKED - YTDADJ1  5 OF 5
-------------------------------------------------------------------------------
     SSN      PAYBLK  FUNC            LAST NAME               FIRST NAME    I

SUPER DIFF                TXBLE CI MTD               TXBLE STATE
  DIFF ADJ   ____________   MTD ADJ     ____________   YTD ADJ     ____________
TAXABLE                   TXBLE CI QTD               TXBLE ST MTD
  TAX ADJ    ____________   QTD ADJ     ____________   MTD ADJ     ____________
TAXABLE MTD               TXBLE CNTY                 TXBLE ST QTD
  MTD ADJ    ____________   YTD ADJ     ____________   QTD ADJ     ____________
TAXABLE QTD               TXBLE CT MTD
  QTD ADJ    ____________   MTD ADJ     ____________
TXBLE CITY                TXBLE CT QTD
  YTD ADJ    ____________   QTD ADJ     ____________


-------------------------------------------------------------------------------
FUNCTIONS:  A= ADD CHN   C= CHANGE   N= NAME SEARCH   R= RETRIEVE   S= SUSPEND
 PF1= HELP           PF3= PREV SCREEN       PF5= MAIN MENU       PF6= QYTDADJ
 PF7= BACKWARD       PF8= FORWARD           PF12= END
```

YTD Earnings and Premium Hours Worked - YTDADJ1 (Page 5)

DESCRIPTION AND EXECUTION

The YTD Earnings and Premium Hours Worked (YTDADJ1) template is used to change an employee's YTD, QTD, and month-to-date (MTD) earnings and premium hours worked information.

<u>Steps to Reach YTD Earnings and Premium Hours Worked</u>

1. At the Main Menu, select **2** - Payroll.
2. At the Payroll Main Menu, select **2** - MER.
3. At the Master Employee Record Data Entry Menu, select **1** - Master Selection MER Menu.
4. At the Master Selection MER Menu, select **36** - YTD Earnings and Premium Hours Worked.

This template is composed of four screens. You may move forward by pressing **PF8** and backward by pressing **PF7**.

4.2.2.2.24 YTD Leave Cost

```
COMMAND: ________                    NPPS
NAO1432                     YTD LEAVE COST - YTDLVCT       1 OF 2
--------------------------------------------------------------------------------

     SSN      PAYBLK   FUNC            LAST NAME                FIRST NAME    I
 ___ __ ____            _             ______________________  ____________  _

ADMINISTRATIVE LV:                       GRADUATE LEAVE:
  ADMIN ADJ         ____________         GRAD ADJ          ____________
ANNUAL LEAVE:                            HOLIDAY LEAVE:
  ANN ADJ           ____________         HOLI ADJ          ____________
COMP TIME:                               HOME LEAVE:
  CT ADJ            ____________         HOME ADJ          ____________
CREDIT:                                  JURY LEAVE:
  CRD ADJ           ____________         JURY ADJ          ____________
EXCUSED LEAVE:                           MILITARY LEAVE:
  EXCUSED ADJ       ____________         MIL ADJ           ____________


--------------------------------------------------------------------------------
FUNCTIONS:  A= ADD CHN   C= CHANGE   N= NAME SEARCH   R= RETRIEVE   S= SUSPEND
 PF1= HELP           PF3= PREV SCREEN       PF5= MAIN MENU      PF7= BACKWARD
 PF8= FORWARD        PF12= END
```

YTD Leave Cost 1 (YTDLVCT)

```
COMMAND: ________                    NPPS
NAO1432                     YTD LEAVE COST - YTDLVCT       2 OF 2
--------------------------------------------------------------------------------
     SSN      PAYBLK   FUNC            LAST NAME                FIRST NAME    I




RELIG COMP TIME:                         TRAUMATIC INJURY 1:
  RCT ADJ           ____________         INJ1 ADJ          ____________
RESTORED LEAVE:                          TRAUMATIC INJURY 2:
  REST ADJ          ____________         INJ2 ADJ          ____________
SICK LEAVE:                              TRAUMATIC INJURY 3:
  SICK ADJ          ____________         INJ3 ADJ          ____________
TIME OFF AWARD:
  TIME OFF ADJ:     ____________

--------------------------------------------------------------------------------
FUNCTIONS:  A= ADD CHN   C= CHANGE   N= NAME SEARCH   R= RETRIEVE   S= SUSPEND
 PF1= HELP           PF3= PREV SCREEN       PF5= MAIN MENU      PF7= BACKWARD
 PF8= FORWARD        PF12= END
```

YTD Leave Cost 2 (YTDLVCT)

DESCRIPTION AND EXECUTION

The YTD Leave Cost (YTDLVCT) template is used to change an employee's YTD leave cost information.

Steps to Reach YTD Leave Cost

1. At the Main Menu, select **2** - Payroll.
2. At the Payroll Main Menu, select **2** - MER.
3. At the Master Employee Record Data Entry Menu, select **1** - Master Selection MER Menu.
4. At the Master Selection MER Menu, select **37** - YTD Leave Cost.

This template is composed of two screens. You may move forward by pressing **PF8** or backward by pressing **PF7**.

4.2.2.2.25 YTD Deductions

```
COMMAND: ________                    NPPS
NAO1441                   YTD DEDUCTIONS - YTDDED1       1 OF 5
--------------------------------------------------------------------------------
     SSN      PAYBLK   FUNC            LAST NAME               FIRST NAME    I
 ___ __ ____            R              ______________________  ____________  _
ADV PAY                   CFC                        CNTY TAX
  ADV ADJ     ____________   CFC ADJ    ____________   TAX ADJ     ____________
ADV PAY CUM               CHILD SUP                  CNTY TAX MTD
  CUM ADJ     ____________   CHILD ADJ  ____________   MTD ADJ     ____________
BANKRUPTCY                COM GARNISH                CNTY TAX QTD
  BANK ADJ    ____________   GARN ADJ   ____________   QTD ADJ     ____________
BANKRUPT CUM              CITY TAX                   FED TAX
  CUM ADJ     ____________   TAX ADJ    ____________   FED ADJ     ____________
BILL OF COLL              CITY TAX MTD               FED TAX QTD
  BILL ADJ    ____________   MTD ADJ    ____________   QTD ADJ     ____________
BOND                      CITY TAX QTD
  BOND ADJ    ____________   QTD ADJ    ____________
--------------------------------------------------------------------------------
FUNCTIONS:  A= ADD CHN   C= CHANGE   N= NAME SEARCH   R= RETRIEVE   S= SUSPEND
 PF1= HELP          PF3= PREV SCREEN   PF5= MAIN MENU        PF6= QYTDADJ
 PF7= BACKWARD      PF8= FORWARD       PF12= END
```

YTD Deductions 1 (YTDDED1)

```
COMMAND: ________                    NPPS
NAO1441                   YTD DEDUCTIONS - YTDDED1       2 OF 5
--------------------------------------------------------------------------------
     SSN      PAYBLK   FUNC            LAST NAME               FIRST NAME    I
 ___ __ ____            R              ______________________  ____________  _
FEGLI GOVT                FEHB GOVT                  HIT
  GOVT ADJ    ____________   GOVT ADJ   ____________   HIT ADJ     ____________
FEGLI BASIC               FICA                       HIT QTD
  BASIC ADJ   ____________   FICA ADJ   ____________   QTD ADJ     ____________
FEGLI OPTA                FICA QTD                   HIT GOVT
  OPTA ADJ    ____________   QTD ADJ    ____________   GOVT ADJ    ____________
FEGLI OPTB                FICA GOVT                  HIT GOVT QTD
  OPTB ADJ    ____________   GOVT ADJ   ____________   QTD ADJ     ____________
FEGLI OPTC                FICA GOV QTD
  OPTC ADJ    ____________   QTD ADJ    ____________
FEHB                      FICA TRS
  FEHB ADJ    ____________   TRS ADJ    ____________
--------------------------------------------------------------------------------
FUNCTIONS:  A= ADD CHN   C= CHANGE   N= NAME SEARCH   R= RETRIEVE   S= SUSPEND
 PF1= HELP          PF3= PREV SCREEN   PF5= MAIN MENU        PF6= QYTDADJ
 PF7= BACKWARD      PF8= FORWARD       PF12= END
```

YTD Deductions 2 (YTDDED1)

```
COMMAND: ________                    NPPS
NAO1441                    YTD DEDUCTIONS - YTDDED1       3 OF 5
--------------------------------------------------------------------------------
     SSN      PAYBLK   FUNC            LAST NAME               FIRST NAME    I
 ___ __ ____            R             ____________________  ____________  _
INDEBT                     NEBA BAS QTD              PCS CITY TAX
  INDEBT ADJ  ____________  BAS QTD ADJ ____________  CITY ADJ     ____________
MISC                       NEBA OPT QTD              PCS CITY MTD
  MISC ADJ    ____________  OPT QTD ADJ ____________  MTD ADJ      ____________
NEBA BASIC                 NEBA SP QTD               PCS CITY QTD
  NEBA ADJ    ____________  SP QTD ADJ  ____________  QTD ADJ      ____________
NEBA OPTION                NEBA TOT QTD              PCS CNTY TAX
  OPT ADJ     ____________  QTD TOT ADJ ____________  CNTY ADJ     ____________
NEBA SPOUSE                NEBA TR                   PCS CNTY MTD
  SP YTD ADJ  ____________  TR ADJ      ____________  MTD ADJ      ____________
NEBA TOTAL                 NEBA TRV QTD              PCS CNTY QTD
  TOT ADJ     ____________  TR QTD ADJ  ____________  QTD ADJ      ____________
--------------------------------------------------------------------------------
FUNCTIONS:  A= ADD CHN   C= CHANGE   N= NAME SEARCH   R= RETRIEVE   S= SUSPEND
 PF1= HELP          PF3= PREV SCREEN   PF5= MAIN MENU        PF6= QYTDADJ
 PF7= BACKWARD      PF8= FORWARD       PF12= END
```

YTD Deductions 3 (YTDDED1)

```
COMMAND:  ________                   NPPS
NAO1441                    YTD DEDUCTIONS - YTDDED1       4 OF 5
--------------------------------------------------------------------------------
     SSN      PAYBLK   FUNC            LAST NAME               FIRST NAME    I
 ___ __ ____            R             ____________________  ____________  _
PCS ST TAX                 PCS HIT                   STATE TX QTD
  ST ADJ      ____________   HIT ADJ    ____________  QTD ADJ      ____________
PCS ST MTD                 PCS HIT QTD               STATE TX MTD
  MTD ADJ     ____________   QTD ADJ    ____________  MTD ADJ      ____________
PCS ST QTD                 PCS FICA                  TSP LN CUM1
  QTD ADJ     ____________   FICA ADJ   ____________  CUM1 ADJ     ____________
PCS FED TAX                PCS FICA QTD              TSP LN CUM2
  FED ADJ     ____________   QTD ADJ    ____________  CUM2 ADJ     ____________
PCS F TX QTD               STATE TAX                 TSP LN DED1
  QTD ADJ     ____________   TAX ADJ    ____________  DED1 ADJ     ____________


--------------------------------------------------------------------------------
FUNCTIONS:  A= ADD CHN   C= CHANGE   N= NAME SEARCH   R= RETRIEVE   S= SUSPEND
 PF1= HELP          PF3= PREV SCREEN   PF5= MAIN MENU        PF6= QYTDADJ
 PF7= BACKWARD      PF8= FORWARD       PF12= END
```

YTD Deductions 4 (YTDDED1)

```
COMMAND:  ________                    NPPS
NAO1441                    YTD DEDUCTIONS - YTDDED1       5 OF 5
--------------------------------------------------------------------------------
     SSN      PAYBLK   FUNC            LAST NAME                FIRST NAME    I
 ___ __ ____             R             ______________________  ____________  _
TSP LN DED2
  DED2 ADJ    ____________
TSP TRS IN
  TSP ADJ     ____________
UNION DUES
  DUES ADJ    ____________
VOL ALLOT
  ALLOT ADJ   ____________




--------------------------------------------------------------------------------
FUNCTIONS:  A= ADD CHN   C= CHANGE   N= NAME SEARCH   R= RETRIEVE   S= SUSPEND
 PF1= HELP          PF3= PREV SCREEN   PF5= MAIN MENU        PF6= QYTDADJ
 PF7= BACKWARD      PF8= FORWARD       PF12= END
```

YTD Deductions 5 (YTDDED1)

DESCRIPTION AND EXECUTION

The YTD Deductions (YTDDED1) template is used to change an employee's YTD, QTD, and cumulative deductions' information.

<u>Steps to Reach YTD Deductions</u>

1. At the Main Menu, select **2** - Payroll.
2. At the Payroll Main Menu, select **2** - MER.
3. At the Master Employee Record Data Entry Menu, select **1** - Master Selection MER Menu.
4. At the Master Selection MER Menu, select **38** - YTD Deductions.

This template is composed of four screens. You may move forward by pressing **PF8** and backward by pressing **PF7**.

4.2.2.2.26 Retirement Adjustments

```
COMMAND: ________                    NPPS
NAO1443               RETIREMENT ADJUSTMENTS - RETIRADJ    1 OF 3
--------------------------------------------------------------------------------
     SSN      PAYBLK   FUNC            LAST NAME               FIRST NAME    I
 ___ __ ____            _             ______________________  ____________  _
CSRS PRIOR                CSRS TRAN IN              CSRS YTD
  PRIOR ADJ   ____________   TR IN ADJ  ____________   YTD ADJ     ____________
CSRS TRAN OUT             CSRS CUM
  TR OUT ADJ  ____________   CUM ADJ    ____________
CSRS MD PR                CSRS M TR IN              CSRS MIL YTD
  MD ADJ      ____________   TR IN ADJ  ____________   MIL YTD ADJ ____________
CSRS M TR OUT             CSRS MD CUM
  TR OUT ADJ  ____________   MD CUM ADJ ____________
CIV SR CRD PR             CIV SR TR IN              CIV SER YTD
  CRD PR ADJ  ____________   TR IN ADJ  ____________    YTD ADJ    ____________
CIV SR TR OUT             CIV SR C CUM
  TR OUT ADJ  ____________   CD CUM ADJ ____________ RETIRE CODE
--------------------------------------------------------------------------------
FUNCTIONS:  A= ADD CHN   C= CHANGE   N= NAME SEARCH   R= RETRIEVE   S= SUSPEND
 PF1= HELP          PF3= PREV SCREEN   PF5= MAIN MENU        PF6= QYTDADJ
 PF7= BACKWARD      PF8= FORWARD       PF12= END
```

Retirement Adjustments - RETIRADJ (Page 1)

```
COMMAND: ________                    NPPS
NAO1443               RETIREMENT ADJUSTMENTS - RETIRADJ    2 OF 3
--------------------------------------------------------------------------------
     SSN      PAYBLK   FUNC            LAST NAME               FIRST NAME    I
 ___ __ ____            _             ______________________  ____________  _
RETIRE CODE
CSRS GOVT
  GOVT ADJ    ____________
CSRS MD INTCM
  INTCM ADJ   ____________
CSRS MD INT
  INT ADJ     ____________





--------------------------------------------------------------------------------
FUNCTIONS:  A= ADD CHN   C= CHANGE   N= NAME SEARCH   R= RETRIEVE   S= SUSPEND
 PF1= HELP          PF3= PREV SCREEN   PF5= MAIN MENU        PF6= QYTDADJ
 PF7= BACKWARD      PF8= FORWARD       PF12= END
```

Retirement Adjustments - RETIRADJ (Page 2)

```
COMMAND: ________                    NPPS
NAO1443               RETIREMENT ADJUSTMENTS - RETIRADJ    3 OF 3
-------------------------------------------------------------------------------
     SSN      PAYBLK   FUNC            LAST NAME                FIRST NAME    I
 ___ __ ____             R             ______________________  _____________  _
RETIRE CODE           ADJUST RETIRE CODE  _
FERS PRIOR                 FERS TRAN IN              FERS CODE K   _____________
  PRIOR ADJ   _____________  TR IN ADJ  _____________ FERS CODE L   _____________
FERS TRAN OUT              FERS CUM                  FERS CODE M   _____________
  TR OUT ADJ  _____________  CUM ADJ    _____________ FERS CODE N   _____________
FERS MD PR                 FERS M TR IN
  MD ADJ      _____________  TR IN ADJ  _____________ FERS YTD
FERS M TR OUT              FERS MD CUM                 YTD ADJ     _____________
  TR OUT ADJ  _____________  MD CUM ADJ _____________ FERS MIL YTD
FERS GOVT                  FERS MD INT                 MIL YTD ADJ _____________
  GOVT ADJ    _____________  INT ADJ    _____________ FERS MD INTC
                                                       INTC ADJ    _____________
-------------------------------------------------------------------------------
FUNCTIONS:  A= ADD CHN   C= CHANGE   N= NAME SEARCH   R= RETRIEVE   S= SUSPEND
 PF1= HELP          PF3= PREV SCREEN   PF5= MAIN MENU        PF6= QYTDADJ
 PF7= BACKWARD      PF8= FORWARD       PF12= END
```

Retirement Adjustments - RETIRADJ (Page 3)

DESCRIPTION AND EXECUTION

The Retirement Adjustments (RETIRADJ) template is used to adjust employee retirement accumulations.

<u>Steps to Reach Retirement Adjustments</u>

1. At the Main Menu, select **2** - Payroll.
2. At the Payroll Main Menu, select **2** - MER.
3. At the Master Employee Record Data Entry Menu, select **1** - Master Selection MER Menu.
4. At the Master Selection MER Menu, select **39** - YTD Retirement Adjustments.

This template is composed of three screens. You may move forward by pressing **PF8** and backward by pressing **PF7**.

The breakdown of the FERS retirement plan codes is provided for year-end reporting purposes for those cases when contributions to more than one FERS plan have been made in the same year. These fields may be updated directly, or they will be updated as a result of entering adjustments to the FERS YTD/CUM fields in correspondence with the ADJUST RETIRE CODE value. The breakdown accumulators are updated each pay period along with the FERS YTD and CUM accumulators.

4.2.2.2.27 YTD Deductions TSP

```
COMMAND: ________                    NPPS
NAO1442      YTD DEDUCTIONS, THRIFT SAVINGS PLAN - YTDTSP    1 OF 2
--------------------------------------------------------------------------------

     SSN      PAYBLK   FUNC            LAST NAME               FIRST NAME    I
 ___ __ ____            _             ______________________  ____________  _


EYTD CY G                   YTD GB G                    YTD GM G
    G ADJ  ____________        G ADJ  ____________         G ADJ  ____________
EYTD CY F                   YTD GB F                    YTD GM F
    F ADJ  ____________        F ADJ  ____________         F ADJ  ____________
EYTD CY C                   YTD GB C                    YTD GM C
    C ADJ  ____________        C ADJ  ____________         C ADJ  ____________

  EYTD CY                     YTD GB                      YTD GM

--------------------------------------------------------------------------------
FUNCTIONS:  A= ADD CHN   C= CHANGE   N= NAME SEARCH   R= RETRIEVE   S= SUSPEND
 PF1= HELP          PF3= PREV SCREEN    PF5= MAIN MENU      PF6= QYTDADJ
 PF7= BACKWARD      PF8= FORWARD        PF12= END
```

YTD Deductions, Thrift Savings Plan - YTDTSP (Page 1)

```
COMMAND: ________                    NPPS
NAO1442      YTD DEDUCTIONS, THRIFT SAVINGS PLAN - YTDTSP    2 OF 2
--------------------------------------------------------------------------------

     SSN      PAYBLK   FUNC            LAST NAME               FIRST NAME    I


CY DED MTD                 CITY DED QTD                ST DED YTD
  MTD ADJ     ____________   QTD ADJ     ____________   YTD ADJ    ____________
CY DED QTD                 CNTY DED YTD                ST DED MTD
  QTD ADJ     ____________   YTD ADJ     ____________   MTD ADJ    ____________
CITY DED YTD               CNTY DED MTD                ST DED QTD
  YTD ADJ     ____________   MTD ADJ     ____________   QTD ADJ    ____________
CITY DED MTD               CNTY DED QTD
  MTD ADJ     ____________   QTD ADJ     ____________


--------------------------------------------------------------------------------
FUNCTIONS:  A= ADD CHN   C= CHANGE   N= NAME SEARCH   R= RETRIEVE   S= SUSPEND
 PF1= HELP          PF3= PREV SCREEN     PF5= MAIN MENU     PF6= QYTDADJ
 PF7= BACKWARD      PF8= FORWARD         PF12= END
```

YTD Deductions, Thrift Savings Plan - YTDTSP (Page 2)

DESCRIPTION AND EXECUTION

The YTD Deductions, Thrift Savings Plan (YTDTSP) template is used to establish and change an employee's YTD and cumulative TSP deductions information.

Steps to Reach YTD Deductions TSP

1. At the Main Menu, select **2** - Payroll.
2. At the Payroll Main Menu, select **2** - MER.
3. At the Master Employee Record Data Entry Menu, select **1** - Master Selection MER Menu.
4. At the Master Selection MER Menu, select **40** - YTD Deductions TSP.

This template is composed of three screens. You may move forward by pressing **PF8** and backward by pressing **PF7**.

4.2.2.2.28 Appointment Limitations

```
COMMAND: ________                    NPPS
NAO1450               APPOINTMENT LIMITATIONS - LIMIT
--------------------------------------------------------------------------------
     SSN      PAYBLK     FUNC        LAST NAME                FIRST NAME    I
 ___ __ ____               _         ______________________  ____________  _
              APPOINTMENT
                 LIMIT                CUM USED             BALANCE
              -----------             --------             -------
 DAYS:                               ____________
 DOLLARS:                            ____________
 HOURS:                              ____________
 DATE:

  BIWEEKLY SEVERANCE PAY:

     POSITION CODE:                                    TENURE CODE:
     PAY PLAN:                                         WORK SCHEDULE:
--------------------------------------------------------------------------------
FUNCTIONS:  A= ADD CHN   C= CHANGE   N= NAME SEARCH   R= RETRIEVE   S= SUSPEND
 PF1= HELP          PF3= PREV SCREEN         PF5= MAIN MENU         PF12= END
```

Appointment Limitations (LIMIT)

DESCRIPTION AND EXECUTION

The Appointment Limitations (LIMIT) template is used to update an employee's accumulation of hours, dollars, or days during a limited appointment.

<u>Steps to Reach Appointment Limitations</u>

1. At the Main Menu, select **2** - Payroll.
2. At the Payroll Main Menu, select **2** - MER.
3. At the Master Employee Record Data Entry Menu, select **1** - Master Selection MER Menu.
4. At the Master Selection MER Menu, select **41** - Appointment Limitations.

4.2.2.2.29 Transfer In Data

```
COMMAND: ________                    NPPS
NAO1444                   TRANSFER IN DATA - TRANSIN
--------------------------------------------------------------------------------

     SSN      PAYBLK   FUNC           LAST NAME                FIRST NAME    I
 ___ __ ____            _            ______________________  ____________  _

  BASE EARNINGS: TRANS IN  ____________

  FICA EARNINGS: TRANS IN  ____________

  FICA DED: TRANS IN       ____________

  TSP DED: TRANS IN        ____________

  LOCAL PAY: TRANS IN      ____________

--------------------------------------------------------------------------------
FUNCTIONS:   C= CHANGE      N= NAME SEARCH       R= RETRIEVE       S= SUSPEND
 PF1= HELP                  PF3= PREV SCREEN                   PF5= MAIN MENU
 PF6= QYTDADJ               PF12= END
```

Transfer in Data - TRANSIN

DESCRIPTION AND EXECUTION

The Transfer In Data (TRANSIN) template is used to establish and change an employee's prior employment base, FICA, HIT, and TSP earnings and deductions.

<u>Steps to Reach Transfer in Data</u>

1. At the Main Menu, select **2** - Payroll.
2. At the Payroll Main Menu, select **2** - MER.
3. At the Master Employee Record Data Entry Menu, select **42** - Transfer In Data.

4.2.2.3 Control Actions

NPPS provides various types of processing control actions: normals control, gross-to-net pay control, YTD control, allotments. In addition, NPPS provides the ability to display information about a single employee or group of employees.

Normals Control - Computes normal pay control for an individual employee, a single payblock, or the entire center. Each old vs. new normals control consists of an old normal amount from the previous pay period, a new normal amount computed automatically from any current pay period action affecting normal pay control elements, and a computed difference between the two. NPPS globally computes all old vs. new normals to provide a new baseline for the normal pay control.

In addition, a tour of duty normals is computed for part-time employees and only current normals are computed.

Payroll Register Control - Computes gross to net pay balancing control elements and maintains these control elements for an individual employee, a single payblock, and the entire center.

Pay Period YTD Adjustments - Calculates the YTD control elements from earnings and adjustments accumulations maintenance actions by computing the difference between the previous accumulations value and the new accumulations value.

Savings Allotment Summary - Computes allotment control total dollars for changes to voluntary allotments and TSP loan repayment allotments at the center level for changes made during the pay period.

Bonds Control - Summarizes bond enrollments and pay period bond processing.

Awards Control - Queries deduction amounts withheld from cash awards during the current pay period for a given employee.

Queries - Displays information about a single employee or group of employees. For example, you may display personnel information about a single employee, or list a group of new employees or terminated employees. The following queries are provided.

- Personnel Data
- New Employee List
- Terminated Employee List
- Pay Period History Query
- Pay Period History

4.2.2.3.1 Old Versus New Normals

```
* SPECIFY PAYBLOCK, SSN, OR PF9 - 'NAME SEARCH'


COMMAND: ________                    NPPS
NAO1520                    OLD VERSUS NEW NORMALS - QNORM    1 OF 3
-------------------------------------------------------------------------------
PAY BLOCK: __ OR SSN: ___ __ ____ NAME: _______________________ ____________ _

                                        OLD              NEW         DIFFERENCE
 GROSS PAY
   SUPER DIFF
   FOREIGN DIFF
   RETENTION ALLOW
   STAFF DIFF
  *AUO
   LOCAL PAY
 CSRS
 FICA
 HEALTH INSURANCE TAX
 FEDERAL WITHOLDING TAX
 STATE WITHHOLDING TAX
-------------------------------------------------------------------------------
 PF1= HELP          PF3= PREV SCREEN        PF5= MAIN MENU        PF7= BACKWARD
 PF8= FORWARD       PF9= NAME SEARCH        PF12= END
```

Old Versus New Normals - QNORM (Page 1)

```
COMMAND: ________                    NPPS
NAO1520                    OLD VERSUS NEW NORMALS - QNORM    2 OF 3
-------------------------------------------------------------------------------
PAY BLOCK: __ OR SSN: ___ __ ____ NAME: _______________________ ____________ _

                                        OLD              NEW         DIFFERENCE
 CITY WITHHOLDING TAX
 CIVILIAN SERVICE CREDIT
 COUNTY WITHHOLDING TAX
 FEGLI
 FEHB
 BOND DEDUCTION
 CFC
 UNION DUES
 VOLUNTARY SAVINGS ALLOT
 NEBA
 FERS
 ADVANCE PAY DED
-------------------------------------------------------------------------------
 PF1= HELP          PF3= PREV SCREEN        PF5= MAIN MENU        PF7= BACKWARD
 PF8= FORWARD       PF9= NAME SEARCH        PF12= END
```

Old Versus New Normals - QNORM (Page 2)

```
COMMAND: ________                    NPPS
NAO1520                    OLD VERSUS NEW NORMALS - QNORM    3 OF 3
-------------------------------------------------------------------------------
PAY BLOCK: __ OR SSN: ___ __ ____ NAME: ______________________ ____________ _

                                        OLD              NEW         DIFFERENCE
 CSRS MILITARY DEPOSIT
 FERS MILITARY DEPOSIT
 TSP DEDUCTION
 TSP LOAN REPAYMENT ALLOT
 INDEBTEDNESS DUE U.S.
 BANKRUPTCY
 CHILD SUPPORT
 COMMERCIAL GARNISHMENTS
 COST OF LIVING ALLOWANCE
 NET PAY
-------------------------------------------------------------------------------
 PF1= HELP          PF3= PREV SCREEN        PF5= MAIN MENU        PF7= BACKWARD
 PF8= FORWARD       PF9= NAME SEARCH        PF12= END
```

Old Versus New Normals - QNORM (Page 3)

DESCRIPTION AND EXECUTION

The Old Versus New Normals (QNORM) template is used to retrieve and display the old versus new normals pay. The normals are checked against the manual control maintained in the Payroll Office to make sure all pay changes were input. This information may be requested for an individual employee, single payblock, or the entire center.

Steps to Reach Old Versus New Normals

1. At the Main Menu, select **2** - Payroll.
2. At the Payroll Main Menu, select **2** - Master Employee Record (MER).
3. At the Master Employee Record Data Entry Menu, select **1** - Master Selection MER Menu.
4. At the Master Selection MER Menu, select **44** - Old Versus New Normals.

This template is composed of three screens. You may move forward by pressing **PF8** and backward by pressing **PF7**.

DESCRIPTION OF DATA PROCESSING AND OUTPUT

To view the normals for an individual, enter the individual's payblock and SSN in the fields provided at the top of the page and press **ENTER**. To view the normals for a single payblock, enter only the payblock number and press **ENTER**. To view the normals for the entire center, enter the number **99** in the payblock field and press **ENTER**.

* The label AUO will be replaced with AVAIL PAY if the employee is getting availability pay.

4.2.2.3.2 Tour of Duty Normals

```
* SPECIFY SSN

COMMAND: ________                    NPPS
NAO1587                 TOUR OF DUTY NORMALS - QPAY       1 OF 3
-------------------------------------------------------------------------------
SSN: ___ __ ____    PAY BLOCK:

                                  CURRENT NORMALS
 PART TIME HOURS
 GROSS PAY
   SUPER DIFF
   FOREIGN DIFF
   RETENTION ALLOW
   STAFF DIFF
   AUO
   LOCAL PAY
 CSRS
 FICA
 HEALTH INSURANCE TAX
 FEDERAL WITHOLDING TAX
 STATE WITHHOLDING TAX
-------------------------------------------------------------------------------
 PF1= HELP          PF3= PREV SCREEN       PF5= MAIN MENU         PF7= BACKWARD
 PF8= FORWARD       PF12= END
```

Tour of Duty Normals - QPAY (Page 1)

```
COMMAND: ________                    NPPS
NAO1587                 TOUR OF DUTY NORMALS - QPAY       2 OF 3
-------------------------------------------------------------------------------
SSN: ___ __ ____    PAY BLOCK:

                                  CURRENT NORMALS
 CITY WITHHOLDING TAX
 CIVILIAN SERVICE CREDIT
 COUNTY WITHHOLDING TAX
 FEGLI
 FEHB
 BOND DEDUCTION
 CFC
 UNION DUES
 VOLUNTARY SAVINGS ALLOT
 NEBA
 FERS
 CSRS MILITARY DEPOSIT
 FERS MILITARY DEPOSIT
-------------------------------------------------------------------------------
 PF1= HELP          PF3= PREV SCREEN       PF5= MAIN MENU         PF7= BACKWARD
 PF8= FORWARD       PF12= END
```

Tour of Duty Normals - QPAY (Page 2)

```
COMMAND: ________                    NPPS
NAO1587                 TOUR OF DUTY NORMALS - QPAY       3 OF 3
-------------------------------------------------------------------------------
SSN: ___ __ ____    PAY BLOCK:

                                  CURRENT NORMALS
 TSP DEDUCTION
 TSP LOAN REPAYMENT ALLOT
 INDEBTEDNESS DUE U.S.
 BANKRUPTCY
 CHILD SUPPORT
 COMMERCIAL GARNISHMENTS
 COST OF LIVING ALLOWANCE
 ADVANCE PAY DED
 NET PAY




-------------------------------------------------------------------------------
 PF1= HELP          PF3= PREV SCREEN       PF5= MAIN MENU         PF7= BACKWARD
 PF8= FORWARD       PF12= END
```

Tour of Duty Normals - QPAY (Page 3)

DESCRIPTION AND EXECUTION

The Tour of Duty Normals (QPAY) template is used to retrieve and display the normal pay fields for a part-time employee. The employee's normals will be computed based on part-time hours.

<u>Steps to Reach Tour of Duty Normals</u>

1. At the Main Menu, select **2** - Payroll.
2. At the Payroll Main Menu, select **2** - MER.
3. At the Master Employee Record Data Entry Menu, select **1** - Master Selection MER Menu.
4. At the Master Selection MER Menu, select **52** - Tour of Duty Normals.

This template is composed of three screens. You may move forward by pressing **PF8** and backward by pressing **PF7**.

4.2.2.3.3 Awards Control

```
COMMAND: ________                    NPPS
NAO1585                    INDIVIDUAL AWARDS - QAWARD
--------------------------------------------------------------------------------

     SSN     PAYBLK  FUNCT  PAY DATE   LAST NAME               FIRST NAME    I
 ___ __ ____          _                _______________________  ____________  _


 NOAC   GROSS     FED       OASDI   HIT      STATE   CITY    COUNTY   NET AWD




 TOTAL


--------------------------------------------------------------------------------
FUNCTIONS:  N= NAME SEARCH         R= RETRIEVE
 PF1= HELP         PF3= PREV SCREEN         PF5= MAIN MENU         PF12= END
```

Awards Control (QAWARD)

DESCRIPTION AND EXECUTION

The Awards Control (QAWARD) template is used to retrieve and display the award fields for an individual employee.

<u>Steps to Reach Awards Control</u>

1. At the Main Menu, select **2** - Payroll.
2. At the Payroll Main Menu, select **2** - MER.
3. At the Master Employee Record Data Entry Menu, select **1** - Master Selection MER Menu.
4. At the Master Selection MER Menu, select **51** - Awards Control.

4.2.2.3.4 Pay Period YTD Adjustments

```
COMMAND: ________                    NPPS
NAO1530                 PAY PERIOD YTD ADJUSTMENTS - QYTDADJ  1  OF 17
--------------------------------------------------------------------------------
PAY BLOCK:  __
                                 OLD TOTAL       NEW TOTAL       DIFFERENCE
 EARNINGS:
    AWD
    AVAILABILITY PAY
    AWARD NET
    BASE
    BASE TRANS IN
    BOND REFUND
    CASH AWARDS
    CITY GROSS
    CITY GRS MTD
    CITY GRS QTD
    COLA
    COLA QTD
--------------------------------------------------------------------------------
 PF1= HELP          PF3= PREV SCREEN       PF5= MAIN MENU        PF7= BACKWARD
 PF8= FORWARD       PF12= END
```

Pay Period YTD Adjustments - QYTDADJ (Page 1)

```
COMMAND: ________                    NPPS
NAO1530                 PAY PERIOD YTD ADJUSTMENTS - QYTDADJ  2  OF 17
--------------------------------------------------------------------------------
PAY BLOCK:  __
                                 OLD TOTAL       NEW TOTAL       DIFFERENCE
 EARNINGS:
    CNTY GROSS
    CNTY GRS MTD
    CNTY GRS QTD
    EIC
    FERS
    FICA
    FICA QTD
    FICA TRANS IN
    FIRE FIGHTERS
    FOREIGN DIFF
    GROSS
    HAZARDOUS
--------------------------------------------------------------------------------
 PF1= HELP          PF3= PREV SCREEN       PF5= MAIN MENU        PF7= BACKWARD
 PF8= FORWARD       PF12= END
```

Pay Period YTD Adjustments - QYTDADJ (Page 2)

```
COMMAND: ________                    NPPS
NAO1530                 PAY PERIOD YTD ADJUSTMENTS - QYTDADJ  3  OF 17
--------------------------------------------------------------------------------
PAY BLOCK:  __
                                OLD TOTAL       NEW TOTAL       DIFFERENCE
 EARNINGS:
    HIT
    HIT QTD
    LOCAL PAY
    LOCAL PAY TRANS IN
    LUMP SUM LV
    NET
    NIGHT DIFF
    OVERTIME
    PCS NOT SUBJ CITY TAX
    PCS CITY TAX
    PCS CITY MTD
    PCS CITY QTD
--------------------------------------------------------------------------------
 PF1= HELP          PF3= PREV SCREEN       PF5= MAIN MENU        PF7= BACKWARD
 PF8= FORWARD       PF12= END
```

Pay Period YTD Adjustments - QYTDADJ (Page 3)

```
COMMAND: ________                    NPPS
NAO1530                 PAY PERIOD YTD ADJUSTMENTS - QYTDADJ  4  OF 17
--------------------------------------------------------------------------------
PAY BLOCK:  __
                                OLD TOTAL       NEW TOTAL       DIFFERENCE
 EARNINGS:
    PCS NOT SUB CNTY TAX
    PCS CNTY TAX
    PCS CNTY MTD
    PCS CNTY QTD
    PCS FICA
    PCS FICA QTD
    PCS HIT
    PCS HIT QTD
    PCS NOT SUBJ STATE TAX
    PCS STATE TAX
    PCS STATE MTD
    PCS STATE QTD
--------------------------------------------------------------------------------
 PF1= HELP          PF3= PREV SCREEN       PF5= MAIN MENU        PF7= BACKWARD
 PF8= FORWARD       PF12= END
```

Pay Period YTD Adjustments - QYTDADJ (Page 4)

```
COMMAND: ________                    NPPS
NAO1530                 PAY PERIOD YTD ADJUSTMENTS - QYTDADJ  5  OF 17
--------------------------------------------------------------------------------
PAY BLOCK:  __
                                OLD TOTAL       NEW TOTAL       DIFFERENCE
 EARNINGS:
    PCS NOT SUBJ FED TAX
    PCS FED TAX
    PCS FED TAX QTD
    RETENTION ALLOW
    STAFF DIFF
    STATE GROSS
    STATE GRS MTD
    STATE GRS QTD
    STAT CUT
    SUNDAY DIFF
    SUPER DIFF
    TAXABLE
--------------------------------------------------------------------------------
 PF1= HELP          PF3= PREV SCREEN       PF5= MAIN MENU        PF7= BACKWARD
 PF8= FORWARD       PF12= END
```

Pay Period YTD Adjustments - QYTDADJ (Page 5)

```
COMMAND: ________                    NPPS
NAO1530                 PAY PERIOD YTD ADJUSTMENTS - QYTDADJ  6  OF 17
--------------------------------------------------------------------------------
PAY BLOCK:  __
                                OLD TOTAL       NEW TOTAL       DIFFERENCE
 EARNINGS:
    TAXABLE MTD
    TAXABLE QTD
    TAXABLE CITY
    TAXABLE CITY MTD
    TAXABLE CITY QTD
    TAXABLE CNTY
    TAXABLE CNTY MTD
    TAXABLE CNTY QTD
    TAXABLE STATE
    TAXABLE STATE MTD
    TAXABLE STATE QTD

--------------------------------------------------------------------------------
 PF1= HELP          PF3= PREV SCREEN       PF5= MAIN MENU        PF7= BACKWARD
 PF8= FORWARD       PF12= END
```

Pay Period YTD Adjustments - QYTDADJ (Page 6)

```
COMMAND: ________                    NPPS
NAO1530                 PAY PERIOD YTD ADJUSTMENTS - QYTDADJ  7  OF 17
--------------------------------------------------------------------------------
PAY BLOCK:  __
                                OLD TOTAL       NEW TOTAL       DIFFERENCE
 TSP DEDUCTIONS:
    CY DED
    GOVT BASIC AMT DIST
    GOVT MATCH AMT DIST









--------------------------------------------------------------------------------
 PF1= HELP          PF3= PREV SCREEN       PF5= MAIN MENU        PF7= BACKWARD
 PF8= FORWARD       PF12= END
```

Pay Period YTD Adjustments - QYTDADJ (Page 7)

```
COMMAND: ________                    NPPS
NAO1530                 PAY PERIOD YTD ADJUSTMENTS - QYTDADJ  8  OF 17
--------------------------------------------------------------------------------
PAY BLOCK:  __
                                OLD TOTAL       NEW TOTAL       DIFFERENCE
 TSP DEDUCTIONS:
    TSP STATE DED YTD
    TSP STATE DED MTD
    TSP STATE DED QTD
    TSP CNTY DED YTD
    TSP CNTY DED MTD
    TSP CNTY DED QTD
    TSP CITY DED YTD
    TSP CITY DED MTD
    TSP CITY DED QTD
    TSP TRNS IN


--------------------------------------------------------------------------------
 PF1= HELP          PF3= PREV SCREEN       PF5= MAIN MENU        PF7= BACKWARD
 PF8= FORWARD       PF12= END
```

Pay Period YTD Adjustments - QYTDADJ (Page 8)

```
COMMAND: ________                    NPPS
NAO1530                 PAY PERIOD YTD ADJUSTMENTS - QYTDADJ  9  OF 17
--------------------------------------------------------------------------------
PAY BLOCK:  __
                                 OLD TOTAL       NEW TOTAL       DIFFERENCE
 DEDUCTIONS:
    ADV PAY CUM
    ADV PAY YTD
    BANKRUPTCY
    BANKRUPTCY CUM
    BILL OF COLL
    BOND
    CFC
    CHILD SUP
    CHILD SUP CUM
    COM GARNISH
    COM GARNISH CUM
    CITY TAX
--------------------------------------------------------------------------------
 PF1= HELP          PF3= PREV SCREEN       PF5= MAIN MENU        PF7= BACKWARD
 PF8= FORWARD       PF12= END
```

Pay Period YTD Adjustments - QYTDADJ (Page 9)

```
COMMAND: ________                    NPPS
NAO1530                 PAY PERIOD YTD ADJUSTMENTS - QYTDADJ  10 OF 17
--------------------------------------------------------------------------------
PAY BLOCK:  __
                                 OLD TOTAL       NEW TOTAL       DIFFERENCE
 DEDUCTIONS:
    CITY TAX MTD
    CITY TAX QTD
    CIV SVS CR PR
    CIV SVS CR
    CIV SVS CUM
    CIV SVS TRSF
    CIV SVS TRSF OUT
    CNTY TAX
    CNTY TAX MTD
    CNTY TAX QTD
    CSRS PRIOR
    CSRS
--------------------------------------------------------------------------------
 PF1= HELP          PF3= PREV SCREEN       PF5= MAIN MENU        PF7= BACKWARD
 PF8= FORWARD       PF12= END
```

Pay Period YTD Adjustments - QYTDADJ (Page 10)

```
COMMAND: ________                    NPPS
NAO1530                 PAY PERIOD YTD ADJUSTMENTS - QYTDADJ  11 OF 17
--------------------------------------------------------------------------------
PAY BLOCK:  __
                                 OLD TOTAL       NEW TOTAL       DIFFERENCE
 DEDUCTIONS:
    CSRS CUM TRANSFER
    CSRS GOVT
    CSRS TRNS OUT
    CSRS NASA CUM
    CSRS MIL DEP PRIOR
    CSRS MIL DEP
    CSRS MIL DEP CUM
    CSRS MIL DEP INT
    CSRS MIL DEP INT CUM
    CSRS MIL DEP TRANSFER
    CSRS MIL TR OUT
    FED TAX
--------------------------------------------------------------------------------
 PF1= HELP          PF3= PREV SCREEN       PF5= MAIN MENU        PF7= BACKWARD
 PF8= FORWARD       PF12= END
```

Pay Period YTD Adjustments - QYTDADJ (Page 11)

```
COMMAND: ________                    NPPS
NAO1530                 PAY PERIOD YTD ADJUSTMENTS - QYTDADJ  12 OF 17
--------------------------------------------------------------------------------
PAY BLOCK:  __
                                 OLD TOTAL       NEW TOTAL       DIFFERENCE
 DEDUCTIONS:
    FED TAX QTD
    FEGLI TOTAL
    FEGLI GOVT
    FEHB
    FEHB GOVT
    FERS PRIOR
    FERS - K FUND
    FERS - L FUND
    FERS - M FUND
    FERS - N FUND
    FERS TRNS IN
    FERS TRNS OUT
--------------------------------------------------------------------------------
 PF1= HELP          PF3= PREV SCREEN       PF5= MAIN MENU        PF7= BACKWARD
 PF8= FORWARD       PF12= END
```

Pay Period YTD Adjustments - QYTDADJ (Page 12)

```
COMMAND: ________                    NPPS
NAO1530                 PAY PERIOD YTD ADJUSTMENTS - QYTDADJ  13 OF 17
--------------------------------------------------------------------------------
PAY BLOCK:  __
                                 OLD TOTAL       NEW TOTAL       DIFFERENCE
 DEDUCTIONS:
    FERS GOVT CONT - K FUND
    FERS GOVT CONT - L FUND
    FERS GOVT CONT - M FUND
    FERS GOVT CONT - N FUND
    FERS MIL DEP PR
    FERS MIL DEP
    FERS MIL DEP CUM
    FERS MIL DEP INT
    FERS MIL DEP INT CUM
    FERS MIL DEP TRANSFER
    FERS MIL TR OUT
    FERS NASA CUM
--------------------------------------------------------------------------------
 PF1= HELP          PF3= PREV SCREEN       PF5= MAIN MENU        PF7= BACKWARD
 PF8= FORWARD       PF12= END
```

Pay Period YTD Adjustments - QYTDADJ (Page 13)

```
COMMAND: ________                    NPPS
NAO1530                 PAY PERIOD YTD ADJUSTMENTS - QYTDADJ  14 OF 17
--------------------------------------------------------------------------------
PAY BLOCK:  __
                                 OLD TOTAL       NEW TOTAL       DIFFERENCE
 DEDUCTIONS:
    FICA
    FICA QTD
    FICA GOVT
    FICA GOVT QTD
    FICA TRNS IN
    HIT
    HIT QTD
    HIT GOVT
    HIT GOVT QTD
    INDEBT
    INDEBT CUM
    MISC
--------------------------------------------------------------------------------
 PF1= HELP          PF3= PREV SCREEN       PF5= MAIN MENU        PF7= BACKWARD
 PF8= FORWARD       PF12= END
```

Pay Period YTD Adjustments - QYTDADJ (Page 14)

```
 COMMAND: ________                    NPPS
NAO1530                 PAY PERIOD YTD ADJUSTMENTS - QYTDADJ  15 OF 17
--------------------------------------------------------------------------------
PAY BLOCK:  __
                                OLD TOTAL       NEW TOTAL       DIFFERENCE
 DEDUCTIONS:
    NEBA BASIC
    NEBA OPTIONAL
    NEBA SPOUSE
    NEBA TOTAL
    NEBA BASIC QTD
    NEBA OPT QTD
    NEBA SPOUSE QTD
    NEBA QTD TOT
    NEBA TRAVEL
    NEBA TRAVEL QTD


--------------------------------------------------------------------------------
 PF1= HELP          PF3= PREV SCREEN       PF5= MAIN MENU        PF7= BACKWARD
 PF8= FORWARD       PF12= END
```

Pay Period YTD Adjustments - QYTDADJ (Page 15)

```
COMMAND: ________                    NPPS
NAO1530                 PAY PERIOD YTD ADJUSTMENTS - QYTDADJ  16 OF 17
--------------------------------------------------------------------------------
PAY BLOCK:  __
                                OLD TOTAL       NEW TOTAL       DIFFERENCE
 DEDUCTIONS:
    PCS CITY TAX
    PCS CITY MTD
    PCS CITY QTD
    PCS CNTY TAX
    PCS CNTY MTD
    PCS CNTY QTD
    PCS FICA
    PCS FICA QTD
    PCS HIT
    PCS HIT QTD
    PCS STATE TAX

--------------------------------------------------------------------------------
 PF1= HELP          PF3= PREV SCREEN       PF5= MAIN MENU        PF7= BACKWARD
 PF8= FORWARD       PF12= END
```

Pay Period YTD Adjustments - QYTDADJ (Page 16)

```
COMMAND: ________                    NPPS
NAO1530                 PAY PERIOD YTD ADJUSTMENTS - QYTDADJ  17 OF 17
-------------------------------------------------------------------------------
PAY BLOCK:  __
                                 OLD TOTAL       NEW TOTAL       DIFFERENCE
 DEDUCTIONS:
    PCS STATE MTD
    PCS STATE QTD
    PCS FED TAX
    PCS FED TAX QTD
    STATE TAX
    STATE TAX MTD
    STATE TAX QTD
    TSP LOAN DED 1
    TSP LOAN DED 2
    UNION DUES
    VOLUNTARY ALLOT

-------------------------------------------------------------------------------
 PF1= HELP          PF3= PREV SCREEN       PF5= MAIN MENU        PF7= BACKWARD
 PF8= FORWARD       PF12= END
```

Pay Period YTD Adjustments - QYTDADJ (Page 17)

DESCRIPTION AND EXECUTION

The Pay Period YTD Adjustments (QYTDADJ) template is used to retrieve and display the changes in the old versus new totals for the pay period YTD, QTD, and MTD data for control and reconciliation purposes.

Steps to Reach Pay Period YTD Adjustments

1. At the Main Menu, select **2** - Payroll.
2. At the Payroll Main Menu, select **2** - MER.
3. At the Master Employee Record Data Entry Menu, select **1** - Master Selection MER Menu.
4. At the Master Selection MER Menu, select **45** - Pay Period YTD Adjustments.

This template is composed of seventeen screens. You may move forward by pressing PF8 and backward by pressing PF7.

4.2.2.3.5 Payroll Register

```
COMMAND: ________                    NPPS
NAO1550                    PAYROLL REGISTER - QREG       1 OF 3
PAY BLOCK: __ OR SSN: ___ __ ____ NAME: ______________________ ____________ _
****** BASE TO GROSS *****  **************** NET TO GROSS *******************
    ADD:                       ADD: NET + DED             ADD: NET + DED
 BASIC PAY                  NET EARN                   FEHB
 OVERTIME                   ADV PAY                    FERS
 NITE DIF                   BANKRUPTCY                 FERS MIL
 HOL WKD                    BONDS                      FICA
 LUMP SUM                   CFC                        INDEBT US
 UNUS CT PD                 CHILD SUPP                 HIT
 SUN DIF                    C GARNISH                  MISC
 HAZARD                     CIV SV CR                  NEBA
 FOREN-DIF                  CITY TAX                   STATE TAX
 SUPER DIFF                 COUNTY TAX                 TSP
 RET ALLOW                  CSRS                       TSP LOAN
 STAFF DIFF                 CSRS MIL                   UNION
*AUO                        FED TAX                    VOL ALLOT
 LOCAL PAY                  FEGLI                         SUB TOT
-------------------------------------------------------------------------------
 PF1= HELP          PF3= PREV SCREEN     PF5= MAIN MENU       PF7= BACKWARD
 PF8= FORWARD       PF9= NAME SEARCH     PF12= END
```

Payroll Register - QREG (Page 1)

```
                                                                      92-06-09
COMMAND: ________                    NPPS                              13:55:45
NAO1550                    PAYROLL REGISTER - QREG       2 OF 3
PAY BLOCK: __ OR SSN: ___ __ ____ NAME: ______________________ ____________ _
****** BASE TO GROSS *****  **************** NET TO GROSS *******************
                              ADD: ADJUSTMENTS           LESS: REFUNDS/CREDIT
 BASIC ADJ                    (-)                        (+)
 OT ADJ                     BILL OF CO                 BOND REF
 NITE ADJ                   CFC                        CFC
 HOL WKD AD                 CITY TAX                   CITY TAX
 SUN ADJ                    CIV SV CR                  CIV SV CR
 HAZ ADJ                    CNTY TAX                   CNTY TAX
 FIR PR ADJ                 COLA                       COLA
 FOR DF ADJ                 CSRS                       CSRS
 SUP DF ADJ                 EIC                        EIC
 RET AL ADJ                 FED TAX                    FED TAX
 STF DF ADJ                 FEGLI                      FEGLI
*AUO    ADJ                 FEHB                       FEHB
 LOCAL  ADJ                 FERS                       FERS
                            FICA                       FICA
-------------------------------------------------------------------------------
 PF1= HELP          PF3= PREV SCREEN     PF5= MAIN MENU       PF7= BACKWARD
 PF8= FORWARD       PF9= NAME SEARCH     PF12= END
```

Payroll Register - QREG (Page 2)

```
                                                                        92-03-30
COMMAND: ________                    NPPS                               10:23:51
NAO1550                     PAYROLL REGISTER - QREG       3 OF 3
PAY BLOCK: __ OR SSN: ___ __ ____ NAME: ____________________ ____________ _
****** BASE TO GROSS *****  **************** NET TO GROSS ******************
                               ADD: ADJUSTMENTS           LESS: REFUNDS/CREDIT
                               (-)                        (+)
                            HIT                        HIT
                            ST TAX                     ST TAX
                            TSP ADJ                    TSP ADJ
                            TSP LOAN                   TSP LOAN
                            UNION DUES                 UNION DUES
                            ADV PAY                    ADV PAY
   SUB TOT                     SUB TOT                    SUB TOT
 LESS:S CUT                                              LESS:
                                                       EIC AMT(+)
                                                       COLA   (+)

   TOT ERN                                                TOT ERN

-------------------------------------------------------------------------------
 PF1= HELP          PF3= PREV SCREEN     PF5= MAIN MENU       PF7= BACKWARD
 PF8= FORWARD       PF9= NAME SEARCH     PF12= END
```

Payroll Register - QREG (Page 3)

DESCRIPTION AND EXECUTION

The Payroll Register (QREG) template is used to retrieve and display payroll register summary information for an individual employee, single payblock, the entire center, or the entire agency from base-to-gross pay and net-to-gross pay.

<u>Steps to Reach Payroll Register</u>

1. At the Main Menu, select **2** - Payroll.
2. At the Payroll Main Menu, select **2** - MER.
3. At the Master Employee Record Data Entry Menu, select **1** - Master Selection MER Menu.
4. At the Master Selection MER Menu, select **47** - Payroll Register Adjustments.

This template is composed of three screens. You may move forward by pressing **PF8** and backward by pressing **PF7**.

DESCRIPTION OF DATA PROCESSING AND OUTPUT

To view the payroll totals for an individual, enter the individual's payblock and SSN in the fields provided at the top of the page and press **ENTER**. To view the totals for a single payblock, enter only the payblock number and press **ENTER**. To view the totals for the entire center, enter the number **99** in the payblock field and press **ENTER**.

* The label AUO will be replaced with AVAIL PAY if the employee is getting availability pay.

CPO Center

When Payroll Register screen is accessed using the CPO USER-ID, CPO User can retrieve and display payroll register summary information for an individual employee, single payblock, the Center, or NASA Agency using Pay Block 98.

4.2.2.3.6 Savings Allotment Summary

```
COMMAND: ________                    NPPS
NAO1510              SAVINGS ALLOTMENT SUMMARY - QALLOT
-------------------------------------------------------------------------------
                              CENTER: ____

                 PRIOR-TOTAL:
                 NEW-ACCOUNTS:
                 CHANGE INCREASES:

                 TOTAL INCREASES:

                    SUB-TOTAL:

                 CANCELLATIONS:
                 CHANGE DECREASES:

                 TOTAL DECREASES:

                    OVERALL TOTAL DEDUCTIONS:
-----------------------------------------------------------------------------
 PF1= HELP          PF3= PREV SCREEN       PF5= MAIN MENU        PF12= END
```

Savings Allotment Summary (QALLOT)

DESCRIPTION AND EXECUTION

The Savings Allotment Summary (QALLOT) template is used to retrieve and display a summary report that shows the current pay period changes to the allotment data for the entire center. This includes voluntary savings allotments and TSP loan repayment allotments.

<u>Steps to Reach Savings Allotment Summary</u>

1. At the Main Menu, select **2** - Payroll.
2. At the Payroll Main Menu, select **2** - MER.
3. At the Master Employee Record Data Entry Menu, select **1** - Master Selection MER Menu.
4. At the Master Selection MER Menu, select **43** - Savings Allotment Summary.

4.2.2.3.7 Bonds Control

```
*   SPECIFY PAYBLOCK AND/OR SSN


COMMAND: ________                    NPPS
NAO1540                     BONDS CONTROL - QBOND                            1
-------------------------------------------------------------------------------

                  PAYBLK: __  OR  SSN: ___ __ ____   (99 = CENTER)

                           ***  EMPLOYEE  ***

# OF ACTIVE BONDS:         TOT DED AMOUNT:
# OF ROTATING OWNERS:      TOT DED THIS PP:              BONDS PURCHASED:


                        ***  PAY BLOCK/CENTER  ***

# OF ACTIVE BONDS:         TOT DED AMOUNT:
# OF ROTATING OWNERS:      TOT DED THIS PP:              BONDS PURCHASED:



-------------------------------------------------------------------------------
 PF1= HELP          PF3= PREV SCREEN        PF5= MAIN MENU       PF12= END
```

Bonds Control (QBOND)

DESCRIPTION AND EXECUTION

The Bonds Control (QBOND) template is used to retrieve and display information about active bonds deductions and bonds purchased during this pay period for an individual employee, single payblock, or the entire center.

<u>Steps to Reach Bonds Control</u>

1. At the Main Menu, select **2** - Payroll.
2. At the Payroll Main Menu, select **2** - MER.
3. At the Master Employee Record Data Entry Menu, select **1** - Master Selection MER Menu.
4. At the Master Selection MER Menu, select **46** - Bonds Control.

DESCRIPTION OF DATA PROCESSING AND OUTPUT

To view the bonds totals for an individual, enter the individual's payblock and SSN in the fields provided at the top of the page and press **ENTER**. To view the bonds totals for a single payblock, enter only the payblock number and press **ENTER**. To view the bonds totals for the entire center, enter the number **99** in the payblock field and press **ENTER**.

4.2.2.3.8 Personnel Data

```
*   SPECIFY SSN OR FUNCTION = N 'NAME SEARCH'

COMMAND: ________                    NPPS
NAO1560                      PERSONNEL DATA - PERSON
-------------------------------------------------------------------------------
SSN: ___ __ ____        FUNC: R     NAME:  _________________ ____________ _
  SCD LEAVE DATE:                           NCC SUFFIX:
  INSTALLATION EOD:                         ADJ BASIC PAY:
  BIRTH DATE:                               OT RATE:
  GRADE:         STEP:                      LOCAL  PAY:             AUO:
  FLSA STS:     ORG LOCATED:                STAFF DIFF:           AVAIL:
  ADJ BASIC HOURLY/DAILY:                   SUPER DIFF RATE:
  WORK SCHED CODE:                          RET ALLOW RATE:
  PART TIME HOURS:                          ANN LV CATG:      ACCR RATE:
  AL ACCR AVAIL:                            RESTORED LV BAL:
  SL ACCR AVAIL:                            COMP TIME BAL:
  LWOP WIG:         FEHB CONTR:             CREDIT HRS BAL:
  RETIRE PLAN:      FEHB PLAN:              LWOP YTD:
  FEGLI PLAN:       FACIL CODE:             SCH ADJ BASIC PAY:
  TENURE TYPE:      OCCUP CODE:             ORG ASSIGNED:
  FTE LINE ITEM:    PAY TBL:                PAY PLAN:       POSITION TYPE:
-------------------------------------------------------------------------------
 FUNCTIONS:         N= NAME SEARCH          R= RETRIEVE
 PF1= HELP          PF3= PREV SCREEN        PF5= MAIN MENU         PF12= END
```

Personnel Data (PERSON)

DESCRIPTION AND EXECUTION

The Personnel Data (PERSON) template is used to retrieve and display personnel data (i.e., SF 50 information) regarding an individual employee.

<u>Steps to Reach Personnel Data</u>

1. At the Main Menu, select **2** - Payroll.
2. At the Payroll Main Menu, select **2** - MER.
3. At the Master Employee Record Data Entry Menu, select **1** - Master Selection MER Menu.
4. At the Master Selection MER Menu, select **48** - Personnel Data.

4.2.2.3.9 New Employee List

```
COMMAND: ________                    NPPS                                  15:50:39
NAO1570                   NEW EMPLOYEE LIST - QNEW
-------------------------------------------------------------------------------
ADD CHAIN                                                                  FACIL
SEL              NAME                        EOD DATE       SSN       PB  CODE

 _                                                           -  -
 _                                                           -  -
 _                                                           -  -
 _                                                           -  -
 _                                                           -  -
 _                                                           -  -
 _                                                           -  -
 _                                                           -  -
 _                                                           -  -
 _                                                           -  -
 _                                                           -  -
 _                                                           -  -
-------------------------------------------------------------------------------
 PF1= HELP           PF3= PREV SCREEN        PF5= MAIN MENU      PF7= BACKWARD
 PF8= FORWARD        PF12= END
```

New Employee List (QNEW)

DESCRIPTION AND EXECUTION

The New Employee List (QNEW) template is used to retrieve and display a list of new employees.

<u>Steps to Reach New Employee List</u>

1. At the Main Menu, select **2** - Payroll.
2. At the Payroll Main Menu, select **2** - MER.
3. At the Master Employee Record Data Entry Menu, select **1** - Master Selection MER Menu.
4. At the Master Selection MER Menu, select **49** - New Employee List.

DESCRIPTION OF DATA PROCESSING AND OUTPUT

Using this list, you may select an employee and initiate the add chain (a group of payroll actions linked together so all the necessary information about a new employee may be added at one time). To initiate an add chain for a new employee, select the employee by entering **X** in the blank to the left of the employee's name and pressing **ENTER**. This automatically retrieves the Employee T&A Distribution template, which displays the information entered by personnel, such as service basis and retirement plan. At this template, entry of the additional information necessary to calculate the employee's pay is required. As long as the function remains "A" for add, you will continue through the add chain until it is completed. The system then returns to the New Employee List.

4.2.2.3.10 Terminated Employee List

```
                                                                                91-02-11
COMMAND: ________                NPPS                                           15:51:36
NAO1580             TERMINATED EMPLOYEE LIST - QTERM
-------------------------------------------------------------------------------
PAYBLOCK: __                                FACILITY   TERMINATION
LUMP SUM             NAME                     CODE    DATE   REASON    SSN
LV SEL
   -                                                                    -  -
   -                                                                    -  -
   -                                                                    -  -
   -                                                                    -  -
   -                                                                    -  -
   -                                                                    -  -
   -                                                                    -  -
   -                                                                    -  -
   -                                                                    -  -
   -                                                                    -  -
   -                                                                    -  -
   -                                                                    -  -
-------------------------------------------------------------------------------
 PF1= HELP           PF3= PREV SCREEN        PF5= MAIN MENU      PF7= BACKWARD
 PF8= FORWARD        PF12= END
```

Terminated Employee List (QTERM)

DESCRIPTION AND EXECUTION

The Terminated Employee List (QTERM) template is used to retrieve and display a list of employees terminating in the current pay period (Duty Status = "Z" and Reactivation Indicator = 0) for a single payblock. Using this list, you may select an employee in order to view the lump sum calculations.

<u>Steps to Reach Terminated Employee List</u>

1. At the Main Menu, select **2** - Payroll.
2. At the Payroll Main Menu, select **2** - MER.
3. At the Master Employee Record Data Entry Menu, select **1** - Master Selection MER Menu.
4. At the Master Selection MER Menu, select **50** - Terminated Employee List.

DESCRIPTION OF DATA PROCESSING AND OUTPUT

To view the lump sum calculations for a terminated employee, select the employee by entering **X** in the Lump Sum Leave Selection field located to the left of each individual's name and pressing **ENTER**. You will automatically move to the Lump Sum Leave/Reactivations template.

4.2.2.3.11 Pay Period History Query

```
COMMAND: ________                    NPPS
NAO1590              PAY PERIOD HISTORY QUERY - QHISTPP
--------------------------------------------------------------------------------

 LAST NAME               FIRST NAME
 ______________________  ____________
 (TYPE NAME AND HIT ENTER FOR NAME SEARCH)


         1. SUMMARY, ENTER:    PP __  PAY DATE YEAR ____
            (QHISTORY)         SSN ___ __ ____


         2. DETAIL,  ENTER:    PP __  PAY DATE YEAR ____
                               SSN ___ __ ____
                               MER SCREEN ________
                               (COMMAND)


--------------------------------------------------------------------------------
 PF1= HELP          PF3= PREV SCREEN       PF5= MAIN MENU       PF12= END
```

Pay Period History Query (QHISTPP)

DESCRIPTION AND EXECUTION

The Pay Period History Query (QHISTPP) template is used to retrieve and display an employee's historical summary for a specified pay period and year. This template is also used to retrieve and display a detailed employee history via a MER template. The authorized payroll professional may identify a specific MER template by entering the abbreviated name of the template to be retrieved.

<u>Steps to Reach Pay Period History Query</u>

1. At the Main Menu, select **2** - Payroll.
2. At the Payroll Main Menu, select **2** - MER.
3. At the Master Employee Record Data Entry Menu, select **1** - Master Selection MER Menu.
4. At the Master Selection MER Menu, select **53** - Pay Period History Query.

4.2.2.3.12 Pay Period History

```
COMMAND: ________                    NPPS
NAO1591                PAY PERIOD HISTORY1 - QHIST1    1 OF 5
--------------------------------------------------------------------------------
SSN: ___ __ ____  LAST NAME: _______________________ FIRST NM: ____________ I: _
PP:  __    PAY DATE YEAR:  ____   (TYPE NAME AND HIT ENTER FOR NAME SEARCH)

ADV PAY DED:                CFC:                       COLA:
 ADV PAY ADJ:                CFC ADJ:                   COLA ADJ:
AUO:                        CHILD SUPP:                CSRS:
 AUO ADJ:                   C GARNISH:                  CUR ADJ:
AVAIL PAY:                  CITY TAX:                   FRMR ADJ:
 AVAIL ADJ:                  CTTX ADJ:                 CSRS MIL:
BANKRUPTTCY:                 FRMR ADJ:                 DUE U.S.:
BASE PAY:                   CIV SV CR:                 EIC.:
 BASE ADJ:                   CIV ADJ:                   EIC ADJ:
BILL OF COL:                CNTY TAX:                  FED TAXES:
BOND:                        CNTY ADJ:                  FEDTX ADJ:
 BOND REFND:                      RETIREMENT PLAN:            FEHB:
        ADJ BASIC HR:                   PAID FLSA:           FEGLI:
--------------------------------------------------------------------------------
 PF1= HELP          PF3= PREV SCREEN       PF5= MAIN MENU       PF7= BACKWARD
 PF8= FORWARD       PF12= END
```

Pay Period History1 (QHIST1)

```
                                                                        92-06-01
COMMAND: ________                    NPPS                               08:50:57
NAO1591                PAY PERIOD HISTORY2 - QHIST2    2 OF 5
--------------------------------------------------------------------------------
SSN:              LAST NAME:                        FIRST NM:              I:
PP:        PAY DATE YEAR:

FEGLI:                     GROSS PAY:                  LOCAL PAY:
 FEGLI ADJ:                 FF PREM ADJ:                LOCAL ADJ:
FEHB:                       FOR DIF ADJ:               LUMP LEAVE:
 CUR ADJ:                   HAZARD ADJ:                 LUMP ADJ:
 FRMR ADJ:                  HOL WK ADJ:               MISC DED:
FERS:                       NT DIFF ADJ:              NEBA:
 CUR  ADJ:                  OT ADJ:                   NET PAY:
 FRMR ADJ:                  SUN DIF ADJ:              NITE DIFF:
FERS MIL:                  HAZ DUTY:                  OVERTIME:
FICA:                      HIT:                       UNUSE CT P:
 FICA ADJ:                  HIT ADJ:                  PCS EARN:
FOR DIFF:                  HOLD WKED:

--------------------------------------------------------------------------------
 PF1= HELP          PF3= PREV SCREEN       PF5= MAIN MENU       PF7= BACKWARD
 PF8= FORWARD       PF12= END
```

Pay Period History2 (QHIST2)

```
                                                                          92-05-27
COMMAND: ________                NPPS                                     16:23:15
NAO1591                PAY PERIOD HISTORY3 - QHIST3       3 OF 5
-------------------------------------------------------------------------------
SSN:              LAST NAME:                        FIRST NM:              I:
PP:        PAY DATE YEAR:

RET ALLOW:                 TSP DED:
 RET ADJ:                   TSP ADJ:
STAFF DIFF:                TSP LOAN:
 STAFF ADJ:                 LOAN1 ADJ:
STAT CUT:                   LOAN2 ADJ:
STATE TAX:                 UNION:
 STTX ADJ:                  UNION ADJ:
 FRMR ADJ:                 VOL ALLOT:
SUN DIFF:
SUPER DIFF:
 SUPER ADJ:

-------------------------------------------------------------------------------
 PF1= HELP          PF3= PREV SCREEN       PF5= MAIN MENU      PF7= BACKWARD
 PF8= FORWARD       PF12= END
```

Pay Period History3 (QHIST3)

```
COMMAND: ________                NPPS
NAO1591                PAY PERIOD HISTORY4 - QHIST4      4 OF 5
-------------------------------------------------------------------------------
SSN:              LAST NAME:                        FIRST NM:              I:
PP:       LEAVE PER:         PAY DATE YEAR:

         *** ANNUAL LEAVE ***                        *** SICK LEAVE ***

        PYCO        CUR        YTD                 PYCO        CUR        YTD
EARN:                                       EARN:
USED:                                       USED:
RIC:                                        RIC:
BAL:                                        BAL:

     AL BAL:                                     SL BAL:

LWOP CURR:           LWOP 80 HR:            RL PYCO:           RL USED:
LWOP YTD:            LWOP WIG:              RL REST:           RL BAL:
-------------------------------------------------------------------------------
 PF1= HELP          PF3= PREV SCREEN       PF5= MAIN MENU        PF7= BACKWARD
 PF8= FORWARD       PF12= END
```

Pay Period History4 (QHIST4)

```
COMMAND: ________                    NPPS
NAO1591                PAY PERIOD HISTORY5 - QHIST5       5 OF 5
--------------------------------------------------------------------------------
SSN:              LAST NAME:                        FIRST NM:              I:
PP:        PAY DATE YEAR:


     BASE HOURS:
     OVERTIME HOURS:
     NITE DIFF HOURS:
     HAZARDOUS HOURS:
     HOLIDAY WORKED:
     SUNDAY HOURS:





--------------------------------------------------------------------------------
 PF1= HELP          PF3= PREV SCREEN       PF5= MAIN MENU      PF7= BACKWARD
 PF8= FORWARD       PF12= END
```

Pay Period History5 (QHIST5)

DESCRIPTION AND EXECUTION

The Pay Period History (QHIST1-5) template is used to retrieve and display a complete employee history for a specified pay period and year. The items are grouped into categories, such as leave hours, and then listed in alphabetical order.

<u>Steps to Reach Pay Period History</u>

1. At the Main Menu, select **2** - Payroll.
2. At the Payroll Main Menu, select **2** - MER.
3. At the Master Employee Record Data Entry Menu, select **1** - Master Selection MER Menu.
4. At the Master Selection MER Menu, select **54** - Pay Period History.

This template is composed of five screens. You may move forward by pressing **PF8** and backward by pressing **PF7**.

4.2.2.4 Administrative

NPPS provides the capability to establish and maintain various administrative employee data. In addition, NPPS provides the capability to process a large group of actions for the same transaction at one time. This capability is referred to as mass transaction processing. Administrative actions include the following.

- Employee T&A Distribution
- Employee Mailing Address and Net Pay
- Spousal Health Benefits
- Payroll Suspense Maintenance Query
- CFC Deductions Mass
- T&A Distribution Mass
- New Payblock Mass Update
- Donate Leave Mass
- Global Transactions, Financial Institution
- Global Transactions, T&A Distribution Code

4.2.2.4.1 Employee T&A Distribution

```
                                                                          91-09-09
COMMAND: ________                NPPS                                     13:41:24
NAO1110             EMPLOYEE T & A DISTRIBUTION - TADIST
 ---------------------------------------------------------------------------

     SSN      PAYBLK   FUNC             LAST NAME               FIRST NAME    I
  ___ __ ____            _             ______________________  ____________  _

TA DISTRIBUTION CODE:   ________       CHANGE TO NEW PAYBLOCK:  __
TOUR OF DUTY SHIFT: FR  ____           (EFFECTIVE NEXT PAY PERIOD)
                    TO  ____
TOUR TYPE:  _                          NEW EMPLOYEE ASSIGNED PAYBLOCK: __
COMPRESSED WORK WEEK ( /Y)  _          (EFFECTIVE THIS PAY PERIOD)
WEEKLY UNCOMMON TOUR HOURS: ______

ORG ASSIGNED:                   INSTALL EOD:                RETIREMENT PLAN:
DUTY STATUS:                    ORG LOCATED:                FACILITY CODE:
SCD LEAVE:                      DUTY STATION:               JOB SERIES:
                                FTE LINE ITEM:
---------------------------------------------------------------------------
FUNCTIONS:  A= ADD CHN   C= CHANGE   N= NAME SEARCH   R= RETRIEVE   S= SUSPEND
 PF1= HELP           PF3= PREV SCREEN      PF4= QNORM           PF5= MAIN MENU
 PF9= QREG           PF12= END
```

Employee T&A Distribution (TADIST)

DESCRIPTION AND EXECUTION

The Employee T&A Distribution (TADIST) template is used to display and update an employee's T&A distribution code and tour of duty information.

<u>Steps to Reach Employee T&A Distribution</u>

1. At the Main Menu, select **2** - Payroll.
2. At the Payroll Main Menu, select **2** - MER.
3. At the Master Employee Record Data Entry Menu, select **1** - Master Selection MER Menu.
4. At the Master Selection MER Menu, select **55** - Employee T&A Distribution.

DESCRIPTION OF DATA PROCESSING AND OUTPUT

Values which may be entered or changed are T&A Distribution Code, Change to New Payblock, Tour of Duty Shift, and Tour Type. The remaining fields located on the bottom third of the screen are for display only. Information in these fields was entered by personnel at the time the individual was hired.

This is the first action in the New Employee Add Chain. To begin an add chain, enter **A** in the Func field. You may also begin an add chain from the New Employee List.

4.2.2.4.2 Employee Mailing Address and Net Pay

```
COMMAND: ________                    NPPS
NAO1120     EMPLOYEE MAILING ADDRESS AND NET PAY DISPOSITION - ADDR
--------------------------------------------------------------------------------
     SSN      PAYBLK   FUNC           LAST NAME                FIRST NAME    I
 ___ __ ____            _            ______________________  ____________  _
  MAILING ADDRESS:  ______________________________________
                    ______________________________________
  CITY:             _________________            STATE: ___   ZIP: _____ - ____
  NET-VIA-EFT:
       FINANCIAL INST ROUTING NBR:  _________
       ACCOUNT NUMBER:              ___________________    ACCOUNT TYPE:  _
  FIN. INST. NAME:
  ADDRESS FIN:

  CITY:                                         STATE:       ZIP:

  ADDRESS CHECK:    ______________________________________        OFFICE CHECK: _
                    ______________________________________        (Y OR BLANK)
  CITY:             _________________            STATE: ___   ZIP: _____ - ____
--------------------------------------------------------------------------------
FUNCTIONS:   A= ADD CHN   C= CHANGE   N= NAME SEARCH   R= RETRIEVE   S= SUSPEND
 PF1= HELP          PF3= PREV SCREEN   PF5= MAIN MENU        PF12= END_
```

Employee Mailing Address and Net Pay (ADDR)

DESCRIPTION AND EXECUTION

The Employee Mailing Address and Net Pay Disposition (ADDR) template is used to display and update an employee's mailing address as well as specify the disposition of an employee's net pay. When completing this template, either Net-via-EFT or Check Address must be specified (you may not specify both). Since the Mailing Address field will be used for general mail-outs, such as the Leave and Earnings Statements, it should be provided for all employees. For check disposition, the Net-via-EFT field or Address Check field should be completed.

USER INPUT

You must enter either the employee's Net-via-EFT data or Check Address. The Office Check field is used to instruct the Treasury to send the check to the installation "Designated Agent."

<u>Steps to Reach Employee Mailing Address and Net Pay</u>

1. At the Main Menu, select **2** - Payroll.
2. At the Payroll Main Menu, select **2** - MER.
3. At the Master Employee Record Data Entry Menu, select **1** - Master Selection MER Menu.
4. At the Master Selection MER Menu, select **56** - Employee Mailing Address and Net Pay.

4.2.2.4.3 Spousal Health Benefits

```
*** SSN/PAY PERIOD COMBINATION NOT FOUND

COMMAND: ________                NPPS
NAO1238                SPOUSAL HEALTH BENEFITS - SPFEHB                      1
-------------------------------------------------------------------------------

     SSN      PAY PERIOD  FUNC         LAST NAME                FIRST NAME    I
 ___________      __        R          _______________________  _____________  _

TOTAL NUMBER SPOUSAL HEALTH BENEFITS RECORDS ON FILE:

      FEHB PLAN CODE:    ___

      FEHB CASH PAYMENT: ________

      DATE OF DATA ENTRY:

      REMARKS:  ____________________________________________________________

 PRESS ENTER TO GET NEXT SSN
-------------------------------------------------------------------------------
FUNCTIONS:     A= ADD       C= CHANGE      D= DELETE         R= RETRIEVE
 PF1= HELP         PF3= PREV SCREEN      PF5= MAIN MENU      PF12= END
```

Spousal Health Benefits (SPFEHB)

DESCRIPTION AND EXECUTION

The Spousal Health Benefits (SPFEHB) template is used to set up and maintain information regarding the spousal health benefits elected by an employee's ex-spouse. The employee's record does not reflect that a spousal health benefit is being paid. The ex-spouse's SSN establishes a separate record, and payment data only appears on the SF 1166 and SF 2812.

<u>Steps to Reach Spousal Health Benefits</u>

1. At the Main Menu, select **2** - Payroll.
2. At the Payroll Main Menu, select **2** - MER.
3. At the Master Employee Record Data Entry Menu, select **1** - Master Selection MER Menu.
4. At the Master Selection MER Menu, select **57** - Spousal Health Benefits.

4.2.2.4.4 Payroll Suspense Maintenance Query

```
COMMAND: ________                    NPPS
NAO1600        PAYROLL SUSPENSE MAINTENANCE QUERY - SQUERY                    1
-------------------------------------------------------------------------------

        LIST ACTION FOR EMPLOYEE:
             SSN           LAST NAME                FIRST NAME
         ___ __ ____       ______________________   ____________
                           (TYPE NAME AND HIT ENTER FOR NAME SEARCH)

                   SELECT ONE OF THE FOLLOWING:

          LIST ACTIONS ON OR BEFORE EFFECTIVE DATE: ______
                                     (PP FIRST DAY)
          LIST ACTIONS FOR TRANSACTION TYPE:        ________

          LIST ACTIONS FOR CLERK ID:                ________


-------------------------------------------------------------------------------
 PF1= HELP          PF3= PREV SCREEN      PF5= MAIN MENU       PF12= END
```

Payroll Suspense Maintenance Query (SQUERY)

DESCRIPTION AND EXECUTION

The Payroll Suspense Maintenance Query (SQUERY) template is used to select a method to display the suspended payroll information for an individual employee or group of employees. Information may be requested via one of three methods: (1) a list of actions on or before a given effective date, (2) a list of actions for a specified transaction type, or (3) a list of actions entered by a given clerk as referenced by the clerk's ID. After the method is chosen, NPPS displays the listings using either the List Actions for Employee (SEMP) template or the List Actions on Suspense (SACT) template.

USER INPUT

You may place actions on suspense until the pay period for which they apply. During initialization, NPPS searches the actions on the Payroll Suspense file and selects the actions with the pay period beginning date of the current pay period. It then applies these actions as updates to the appropriate master employee records.

```
*   NO SUSPENSE TO DISPLAY FOR SELECTION CRITERIA

COMMAND: ________                  NPPS
NAO1610             LIST ACTIONS FOR EMPLOYEE - SEMP                        1
-------------------------------------------------------------------------------

        SSN        PAY BLK          LAST NAME               FIRST NAME    I
       -  -

   SEL              DELETE   EFF DATE       TRANSACTION      CLERK      ERROR
                           (PP FIRSTDAY)       TYPE           ID        FLAG
    _                 _      ______
    _                 _      ______
    _                 _      ______
    _                 _      ______
    _                 _      ______
    _                 _      ______
    _                 _      ______
    _                 _      ______
    _                 _      ______
    _                 _      ______
-------------------------------------------------------------------------------
 PF1= HELP          PF3= PREV SCREEN      PF5= MAIN MENU        PF7= BACKWARD
 PF8= FORWARD       PF12= END
```

List Actions for Employee (SEMP)

```
* PLEASE ENTER SELECTION CRITERIA
                                                                      91-10-28
COMMAND: ________                  NPPS                               12:58:53
NAO1620              LIST ACTIONS ON SUSPENSE - SACT                         1
-------------------------------------------------------------------------------
SELECT ONE: EFF DATE: ________  TRANS TYPE: ________  CLERK ID: ________
SEL      SSN      DELETE    EFF. DATE    TRANSACTION    CLERK      SEQ   ERROR
                          (PP FIRST DAY)    TYPE         ID        NO    FLAG
 _                  _      ________
 _                  _      ________
 _                  _      ________
 _                  _      ________
 _                  _      ________
 _                  _      ________
 _                  _      ________
 _                  _      ________
 _                  _      ________
 _                  _      ________
-------------------------------------------------------------------------------
 PF1= HELP          PF3= PREV SCREEN      PF5= MAIN MENU        PF7= BACKWARD
 PF8= FORWARD       PF12= END
```

List Actions on Suspense (SACT)

After entering the information for an action on the appropriate template, you may place the action on suspense by typing **S** in the FUNC field and pressing **ENTER**. NPPS displays a pop-up menu which prompts you for the Effective Date of the action you want to place on suspense, as illustrated on the following screen. Enter the beginning date of the pay period for which the action applies and press **ENTER**. NPPS places the action on suspense and selects it to be matured during the initialization process of the designated future pay period.

```
COMMAND: ________                    NPPS
NAO1241                FEDERAL AND STATE TAXES - FTAX                  10
-----------------------------------------------------------------------------
     SSN      PAYBLK   FUNC            LAST NAME               FIRST NAME    I
 269 00 0000    01       S             SMITH__________________  BETTY_______  A
                                 *** FEDERAL TAXES ***
MARITAL STATUS (M,S): S                                                  ___
EIC MARITAL CODE:     _                                                : _
(1=EMPLOYEE ONLY, 2=EMPLOYE      ________________________________________
                                 |  ENTER THE EFFECTIVE DATE:  01011990 |
                                 |  (PP FIRST DAY - MMDDYYYY)           |
STATE CODE:    __      MARIT     |                                      |     __
ADD EXEMPTS:   __      FILIN     |        OR ENTER PF3 TO ESCAPE        |  _____
ALTERNATE AMT: ____    DEPEN     |                                      | , ): _
                                 |______________________________________|

 FILING STATUS (DC ONLY) - J=JOINTLY, S=SEPARATELY;   ALT % (AZ & MD ONLY)
 ALT AMT (NC ONLY);  DEPENDENT OF ANOTHER (AL ONLY);  WORKING SPOUSE (MS ONLY)
-------------------------------------------------------------------------------
FUNCTIONS:   A= ADD CHN   C= CHANGE   N= NAME SEARCH   R= RETRIEVE  S= SUSPEND
 PF1= HELP          PF3= PREV SCREEN   PF4= QNORM            PF5= MAIN MENU
 PF9= QREG          PF12= END
```

Suspended Action

<u>Steps to Reach Payroll Suspense Maintenance Query</u>

1. At the Main Menu, select **2** - Payroll.
2. At the Payroll Main Menu, select **2** - MER.
3. At the Master Employee Record Data Entry Menu, select **1** - Master Selection MER Menu.
4. At the Master Selection MER Menu, select **58** - Payroll Suspense Maintenance Query.

4.2.2.4.5 CFC Mass Deductions

```
*   SPECIFY SSN'S FOR MASS CHANGES

COMMAND: ________                    NPPS
NAO1710                 CFC DEDUCTIONS MASS - MASSCFC      1 OF 10
-------------------------------------------------------------------------------
FUNCTION:  R
                                                            CFC        DED
     SSN       EMPLOYEE NAME                               ORG       AMOUNT  STATUS

 ___ __ ____                                            _________    ______
 ___ __ ____                                            _________    ______
 ___ __ ____                                            _________    ______
 ___ __ ____                                            _________    ______
 ___ __ ____                                            _________    ______
 ___ __ ____                                            _________    ______
 ___ __ ____                                            _________    ______
 ___ __ ____                                            _________    ______
 ___ __ ____                                            _________    ______
 ___ __ ____                                            _________    ______

-------------------------------------------------------------------------------
FUNCTIONS:    C= CHANGE           R= RETRIEVE        S= SUSPEND
 PF1= HELP          PF3= PREV SCREEN        PF5= MAIN MENU       PF12= END
```

CFC Deductions Mass (MASSCFC)

DESCRIPTION AND EXECUTION

The CFC Deductions Mass (MASSCFC) template is used to input CFC deductions for up to 10 employees.

<u>Steps to Reach CFC Deductions</u>

1. At the Main Menu, select **2** - Payroll.
2. At the Payroll Main Menu, select **2** - MER.
3. At the Master Employee Record Data Entry Menu, select **1** - Master Selection MER Menu.
4. At the Master Selection MER Menu, select **59** - CFC Deduction Mass.

4.2.2.4.6 T&A Mass Distribution

```
* SPECIFY SSN'S FOR MASS CHANGES

COMMAND: ________                NPPS                  1 OF 10
NAO1720         TIME AND ATTENDANCE DISTRIBUTION MASS - MASSTA
-------------------------------------------------------------------------------
FUNCTION:  R
                                                          T&A
     SSN       EMPLOYEE NAME                            DISTRIBUTION  STATUS
                                                           CODE
 ___ __ ____                                             ________
 ___ __ ____                                             ________
 ___ __ ____                                             ________
 ___ __ ____                                             ________
 ___ __ ____                                             ________
 ___ __ ____                                             ________
 ___ __ ____                                             ________
 ___ __ ____                                             ________
 ___ __ ____                                             ________
 ___ __ ____                                             ________

-------------------------------------------------------------------------------
FUNCTIONS:     C= CHANGE        R= RETRIEVE            S= SUSPEND
 PF1= HELP          PF3= PREV SCREEN    PF5= MAIN MENU        PF12= END
```

Time and Attendance Distribution Mass (MASSTA)

DESCRIPTION AND EXECUTION

The Time and Attendance Distribution Mass (MASSTA) template is used to change T&A distribution codes on a large scale (i.e., up to 10 transactions at one time).

<u>Steps to Reach T&A Distribution Mass</u>

1. At the Main Menu, select **2** - Payroll.
2. At the Payroll Main Menu, select **2** - MER.
3. At the Master Employee Record Data Entry Menu, select **1** - Master Selection MER Menu.
4. At the Master Selection MER Menu, select **60** - T&A Distribution Mass.

4.2.2.4.7 New Payblock Mass Update

```
* SPECIFY SSN'S FOR MASS CHANGES

COMMAND: ________                    NPPS
NAO1725              NEW PAYBLOCK MASS UPDATE - MASSBLK    1 OF 10
-------------------------------------------------------------------------------
FUNCTION:  R
                                                  CURRENT         NEXT
     SSN       EMPLOYEE NAME                      PAYBLOCK         PP     STATUS
                                                  ASSIGNED      PAYBLOCK
 ___ __ ____                                                       __
 ___ __ ____                                                       __
 ___ __ ____                                                       __
 ___ __ ____                                                       __
 ___ __ ____                                                       __
 ___ __ ____                                                       __
 ___ __ ____                                                       __
 ___ __ ____                                                       __
 ___ __ ____                                                       __
 ___ __ ____                                                       __
 -------------------------------------------------------------------------------
FUNCTIONS:     C= CHANGE        R= RETRIEVE            S= SUSPEND
 PF1= HELP          PF3= PREV SCREEN    PF5= MAIN MENU        PF12= END
```

New Payblock Mass Update (MASSBLK)

DESCRIPTION AND EXECUTION

The New Payblock Mass Update (MASSBLK) template is used to change payblocks on a large scale (i.e., up to 10 transactions at one time).

<u>Steps to Reach New Payblock Mass Update</u>

1. At the Main Menu, select **2** - Payroll.
2. At the Payroll Main Menu, select **2** - MER.
3. At the Master Employee Record Data Entry Menu, select **1** - Master Selection MER Menu.
4. At the Master Selection MER Menu, select **61** - New Payblock Mass Update.

4.2.2.4.8 Mass Donated Leave

```
*   SPECIFY SSN OR FUNCTION = N 'NAME SEARCH'

COMMAND: ________                    NPPS
NAO1740                DONATED LEAVE MASS - MASDONOR         PAGE  1
-------------------------------------------------------------------------------
RECIPIENT SSN  PAYBLK    FUNC          LAST NAME               FIRST NAME    I
 ___ __ ____               R           ______________________  ____________  _
  INITIALIZE  _  (Y OR BLANK)
  RESTORED LV  _  (MARK 'X' TO RETRIEVE & PROCESS RESTLV DATA ONLY)
DONOR.....   DONATED   DONATED     CUM    DONOR..............................
    SSN       HOURS    RETURNED  DONATED  NAME OR COMMENT       GR  ST    RATE

 _________   _______   _______
 _________   _______   _______
 _________   _______   _______
 _________   _______   _______
 _________   _______   _______
 _________   _______   _______
 _________   _______   _______
 _________   _______   _______
 _________   _______   _______
 _________   _______   _______
-------------------------------------------------------------------------------
FUNCTIONS:    C= CHANGE      N= NAME SEARCH      R= RETRIEVE      S= SUSPEND
 PF1= HELP  PF3= PREV  PF5= MAIN   PF7= BACKWARD   PF8= FORWARD   PF12= END
```

Donated Leave Mass (MASDONOR)

DESCRIPTION AND EXECUTION

The Donated Leave Mass (MASDONOR) template is used to record employees' donations of earned annual leave and restored leave to another employee and returns of unused donated leave to donors. Using this template, up to 300 donated leave transactions may be recorded at one time. The template may be used to record donations or returns in one transaction (up to 300 entries before ENTER), but not both. The Cum Donated field will display the total number of leave hours donated to the recipient and not returned to the donor. The template will retrieve the donors previously entered, displaying their name, grade and step, and hourly rate. If a donor is not assigned to the same installation as the recipient, an informative message will appear in the Name and other fields. Donors may be eliminated by spacing out the displayed information when Cum Donated = 0 or when the recipient's Donated Balance = 0. In addition, if "Y" is entered in the Initialize field, all donor data on the screen will be blanked out during the initialization process. After the transaction is processed, an informative message will be returned that will contain the total hours donated or returned that were entered in the MASDONOR transaction, and the hours donated/returned fields on the template will be returned to blank. When restored leave hours are to be donated or returned, the RESTORED LV field must contain an 'X'. This provides the capability to separately account for the employees donating both types of leave.

Steps to Reach Donated Leave Mass

1. At the Main Menu, select **2** - Payroll.
2. At the Payroll Main Menu, select **2** - MER.
3. At the Master Employee Record Data Entry Menu, select **1** - Master Selection MER Menu.
4. At the Master Selection MER Menu, select **62** - Donated Leave Mass.

4.2.2.4.9 Global Transactions, Financial Institution

```
COMMAND: ________                    NPPS
NAO1730        GLOBAL TRANSACTIONS, FINANCIAL INST - GLOBFIN                 1
-------------------------------------------------------------------------------

FUNCTION:  R

                  FINANCIAL INSTITUTION ROUTING NUMBER

                    FROM:  _________  TO:  _________


                  NAME FROM:
                  NAME TO:

                  NUMBER OF EMPLOYEES AFFECTED:




-------------------------------------------------------------------------------
FUNCTIONS:    C= CHANGE             R= RETRIEVE           S= SUSPEND
 PF1= HELP         PF3= PREV SCREEN      PF5= MAIN MENU      PF12= END
```

Global Transactions, Financial Institution (GLOBFIN)

DESCRIPTION AND EXECUTION

The Global Transactions, Financial Institution (GLOBFIN) template is used to change the name and routing number of a financial institution. This change will be enacted for all employees who have elected to send voluntary allotments or net pay distributions to this financial institution.

<u>Steps to Reach Global Transactions, Financial Inst</u>

1. At the Main Menu, select **2** - Payroll.
2. At the Payroll Main Menu, select **2** - MER.
3. At the Master Employee Record Data Entry Menu, select **1** - Master Selection MER Menu.
4. At the Master Selection MER Menu, select **63** - Global Transactions, Financial Institution.

4.2.2.4.10 Global Transactions, T&A Distribution Code

```
COMMAND: ________                    NPPS
NAO1735        GLOBAL TRANSACTIONS, TA DIST CODE - GLOBTA                    1
-------------------------------------------------------------------------------

FUNCTION:  R

                    T&A DISTRIBUTION CODE

                    FROM:  ________   TO:  ________

                  NUMBER OF EMPLOYEES AFFECTED:





-------------------------------------------------------------------------------
FUNCTIONS:    C= CHANGE             R= RETRIEVE           S= SUSPEND
 PF1= HELP         PF3= PREV SCREEN      PF5= MAIN MENU      PF12= END
```

Global Transactions, T&A Distribution Code (GLOBTA)

DESCRIPTION AND EXECUTION

The Global Transactions, T&A Distribution Code (GLOBTA) template is used to change a T&A distribution code. The records of all employees who are assigned this distribution code will be updated with the new distribution code.

<u>Steps to Reach Global Transactions, T&A Distribution Code</u>

1. At the Main Menu, select **2** - Payroll.
2. At the Payroll Main Menu, select **2** - MER.
3. At the Master Employee Record Data Entry Menu, select **1** - Master Selection MER Menu.
4. At the Master Selection MER Menu, select **64** - Global Transactions, T&A Distribution Code.

4.2.2.4.11 Mass Awards Processing

```
COMMAND: ________                    NPPS
NAO1750                 MASS AWARD PROCESSING - MASSAWD
--------------------------------------------------------------------------------
BLK:  __    FUNCTION:  _

SEL     SSN      EMPL NAME                          NOAC   EFF DATE  AWD AMT

 _     -  -
 _     -  -
 _     -  -
 _     -  -
 _     -  -
 _     -  -
 _     -  -
 _     -  -
 _     -  -
 _     -  -
--------------------------------------------------------------------------------
FUNCTIONS:  C= CHANGE       R= RETRIEVE
SEL:        Y= CHECK        B= NET PAY        BLANK= NO CHECK
 PF1= HELP          PF3= PREV SCREEN       PF5= MAIN MENU       PF7= BACKWARD
 PF8= FORWARD       PF12= END_
```

Mass Awards Processing Menu (MASSAWD)

DESCRIPTION AND EXECUTION

The Mass Awards Processing (MASSAWD) template is used to update the local check designated agent field. All employees receiving an award amount are selected for update by pay block. The SEL field can have a value of "Y" or "B." A value of "Y" indicates that the award is to be paid locally and a separate check is to be issued. A value of "B" indicates that the award should be included in the employee's Net Pay and no separate check should be issued.

<u>Steps to Reach Mass Awards Processing</u>

1. At the Main Menu, select **2** - Payroll.
2. At the Payroll Main Menu, select **2** - MER.
3. At the Master Employee Record Data Entry Menu, select **1** - Master Selection MER Menu.
4. At the Master Selection MER Menu, select **65** - Mass Awards Processing.

4.2.2.4.12 Mass Extended Compensatory Time

```
COMMAND: ________                    NPPS
NAO1760      MASS EXTENDED COMPENSATORY TIME - MASEXTCT     PAGE  1
-------------------------------------------------------------------------------
     SSN     PAYBLK FUNC  EXT DATE    LAST NAME               FIRST NAME    I
 ___ __ ____         R    ________    ____________________  ____________  _

UPD ST EXTENDED  ORIGINAL EXTENDED.........................    CUM     CUM
SEL CD THRU DATE FRFTD DTE  YEARPP  EARN DTE   RATE    HOURS    USED   FRFTD
 _
 _
 _
 _
 _
 _
 _
 _
 _
 _
-------------------------------------------------------------------------------
FUNCTION:      C= CHANGE         N= NAME SEARCH         R= RETRIEVE
 PF1= HELP                PF3= PREV SCREEN              PF5= MAIN MENU
 PF7= BACKWARD            PF8= FORWARD                  PF12= END
```

Mass Extended Compensatory Time (MASEXTCT)

DESCRIPTION AND EXECUTION

The Mass Extended Compensatory Time (MASEXTCT) template is used to display pertinent extended/forfeited CT information and to apply the same extended thru date to multiple extended/forfeited records.

All extended/forfeited CT records, up to a total of 99 records, will be displayed. If a non-blank character is placed in one, and only one, UPD SEL field on the left side of the line that represents one extended/forfeited CT record, the EXTCT screen will be automatically displayed with the information from the record selected available for modification. Changing extended/forfeited CT information will not be permitted if the employee whose data is being displayed by EXTCT has a "good" T&A update status.

If a Function "C" is entered with an EXT DTE (extended through date), all extended/forfeited CT records with a non-blank character in the UPD SEL field will automatically be extended through the date entered.

<u>Steps to Reach Mass Extended Compensatory Time</u>

1. At the Main Menu, select **2** - Payroll.
2. At the Payroll Main Menu, select **2** - MER.
3. At the MER Data Entry Menu, select **1** - Master Selection MER Menu.
4. At the Master Selection MER Menu, select **66** - Mass Extended Compensatory Time.

4.2.3 Pay Computations (T&A and Vouchering)

```
COMMAND: ________                N P P S
NAO0000                  PAYROLL MAIN MENU - MMPAY
--------------------------------------------------------------------------------
                   CENTER ID:        NPPS VERSION:

                   ENTER ONE OF THE FOLLOWING SELECTIONS: _


                         1 - TIME & ATTENDANCE

                         2 - MER

                         3 - TABLE PROCESSING

                         4 - VOUCHERING

                         5 - NON-PERSONNEL ACTION CASH AWARDS


--------------------------------------------------------------------------------
 PF1= HELP                  PF5= MAIN MENU                    PF12= END
```

Payroll Main Menu (MMPAY)

DESCRIPTION AND EXECUTION

Payroll computations include T&A and Payroll Vouchering operations accessed through the Payroll Main Menu (MMPAY). NPPS computes leave and pay based on the T&A data and payroll actions that affect the current pay period earnings, deductions, or leaves balances.

<u>Steps to Reach Time and Attendance</u>

1. At the Main Menu, select **2** - Payroll.
2. At the Payroll Main Menu, select **1** - Time and Attendance.

<u>Steps to Reach Vouchering</u>

1. At the Main Menu, select **2** - Payroll.
2. At the Payroll Main Menu, select **4** - Vouchering.

Throughout the Payroll Computation section, special sets of function and PF keys are available to you. Though not every function and PF key appears on all screens, the following complete set is provided so that you may become familiar with them.

Use of Functions

C=Change	Allows you to change information about an existing employee.
N=Name Search	Allows you to enter an employee's name or partial name and retrieve the SSN. If more than one employee satisfies the name search, a listing of all employees with that name will be displayed on the screen. You may then select the specified employee, and NPPS will enter the SSN on the screen so that you may continue as if you had entered the SSN directly.
S=Split Shift	Allows you to indicate that an employee has worked a split shift during the T&A processing.
H=Hundred Totals	Allows you to view the totals for a group of one hundred employees within the same payblock.
B=Block Totals	Allows you to view the totals for an entire payblock.

Use of PF Keys

The four standard PF keys which appear on most menus and templates are PF1=Help, PF3=Previous Screen, PF5=Main Menu, and PF12=End. Two additional keys, PF7=Backward and PF8=Forward, allow you to move between the pages of a template composed of more than one screen.

The PF2=More Messages may be used to view additional messages during the T&A Edit process. This feature is provided because NPPS may not be able to display all messages on the same screen.

4.2.3.1 Time and Attendance Main Menu

```
COMMAND: ________                N P P S
NAO3000                     T&A MAIN MENU - TAMEN
-------------------------------------------------------------------------------



                ENTER ONE OF THE FOLLOWING SELECTIONS: _

                          1 - T&A EDIT

                          2 - T&A REPORTED HOURS

                          3 - PAYROLL REGISTER




-------------------------------------------------------------------------------
 PF1= HELP           PF3= PREV SCREEN   PF5= MAIN MENU        PF12= END
```

T&A Main Menu (TAMEN)

DESCRIPTION AND EXECUTION

The T&A Main Menu (TAMEN) is used to access the T&A Edit section of payroll computation, illustrated in Figure 4.2.2.1-1, T&A Processing. In addition, this menu is used to view the T&A Reported Hours and the Payroll Register.

<u>Steps to Reach T&A Main Menu</u>

1. At the Main Menu, select **2** - Payroll.
2. At the Payroll Main Menu, select **1** - Time and Attendance.

DESCRIPTION OF DATA PROCESSING RESULTS AND OUTPUT

The results of the T&A processing are as follows.

- Employee record updates of T&A reported hours.
- T&A reported hours control.
- Biweekly totals of reported hours for each employee and payblock.
- Error and information messages from T&A online data entry.

4.2.3.1.1 T&A Edit

```
* SPECIFY NEW PAYBLOCK AND SELECTION, OR USE PF KEYS

COMMAND: ________   NPPS - OFFICIAL PAY RECORD - TAEDIT
NAO3100  ---------------------------------------------------------------------
FUNCTION _ SEL _   PAYBLOCK __ SSN ___ __ ____ EMP#          CMPRSD WEEK(Y/ ) _
LAST NAME _______________________ FIRST ____________  MI _    DATE
        REG    OT     ND     CTE    HOL    SD     HD           CD  OTH  CD  OTH
WEEK1 ______ ______ ______ ______ ______ ______ ______         _ ______ _ ______
SH: _   AL     SL     CTU   LWOP   SUSP   AWOL   HOL    RST   _ ______ _ ______
      ______ ______ ______ ______ ______ ______ ______ ______
        REG    OT     ND     CTE    HOL    SD     HD           CD  OTH  CD  OTH
WEEK2 ______ ______ ______ ______ ______ ______ ______         _ ______ _ ______
SH: _   AL     SL     CTU   LWOP   SUSP   AWOL   HOL    RST   _ ______ _ ______
      ______ ______ ______ ______ ______ ______ ______ ______ LAST SHIFT WRKD _
****************************** BIWEEKLY TOTALS ********************************
WORK  ______ ______ ______ ______ ______ ______ ______         FACILITY CODE:
LEAVE ______ ______ ______ ______ ______ ______ ______ ______
OTHER-  J ______  M ______  A ______  G ______  E ______  C ______  T ______
 LEAVE  I ______  H ______  Y ______  D ______  Z ______  R ______


-------------------------------------------------------------------------------
FUNCTION: B= BLOCK TOT  C= CHANGE  H= HUNDRED TOT  N= NAME SRCH  S= SPLIT SHIFT
  PF1= HELP  PF2= MORE MESSAGES  PF3= PREV SCREEN  PF5= MAIN MENU  PF12= END
```

NPPS - Official Pay Record (TAEDIT)

DESCRIPTION AND EXECUTION

The NPPS - Official Pay Record (TAEDIT) template is used to enter an employee's T&A data online and to correct T&A transactions which NPPS marked as being in error when the T&A batch process was run. NPPS marks T&A transactions which are in error after running validity tests for hours worked, leave hours, and other totals.

T&A is the only source of current hours from which NPPS computes earnings. The T&A transaction must pass field edits and be validated. NPPS can process a maximum of three shifts in the same week. In addition, NPPS automatically creates T&A transactions for those employees who are on LWOP status in the current pay period during the T&A batch process.

For employees working uncommon tours (firefighters, etc.), all hours worked, including overtime, must be entered into the Regular Hours field of the TAEDIT template. The Overtime Hours field must contain only the overtime hours in excess of eight per day (also included in the Regular Hours entry).

<u>Steps to Reach T&A Edit</u>

1. At the Main Menu, select **2** - Payroll.
2. At the Payroll Main Menu, select **1** - Time and Attendance.
3. At the T&A Main Menu, select **1** - T&A Edit.

The first two lines below the template title provide information about the employee such as name, SSN, and payblock. The next four lines provide information about the two weeks which compose each pay period. The types of hours, both earned and used, are shown for each week. Also, a space is provided in which the employee's shift code for each week is entered/displayed. This space is labeled SH for shift worked. The abbreviated names for the types of hours earned and worked are as follows.

- Regular (REG)
- Overtime (OT)
- Night Differential (ND)
- Compensatory Time Earned (CTE)
- Holiday Leave Used (HOL)
- Sunday Differential (SD)
- Hazard Duty (HD)
- Annual Leave (AL)
- Sick Leave (SL)
- Compensatory Time Used (CTU)
- Leave Without Pay (LWOP)
- Suspension (SUSP)
- Absent Without Leave (AWOL)
- Restored Leave (RST)

The last section of the TAEDIT template displays the biweekly totals. The other Leave categories and their abbreviated names are as follows.

A	Administrative
C	Court
D	Credit Hours Used
E	Excused
G	Graduate
H	Home Leave
I	COP
J	Jury
M	Military
R	Religious Comp Time Used
T	Time-Off
Y	Credit Hours Earned
Z	Religious Comp Time Earned

4.2.3.1.2 T&A Reported Hours

```
COMMAND: ________                    NPPS
NAO3200              T & A REPORTED HOURS - QTAR -
FUNCTION: _    PAY BLOCK __    SSN ___ __ ____  THRU
  T & A'S   PRESENT:       ERRORS:       MISSING:       REACTIVATIONS:
    REGULAR:                          OTHER LEAVE:
    OVERTIME:                           A - ADMINISTRATIVE:
    NIGHT DIFF:                         C - COURT:
    COMP EARNED:                        D - CREDIT USED:
    HOLIDAY WORKED:                     E - EXCUSED:
    SUNDAY DIFF:                        G - GRADUATE:
    HAZARD DUTY:                        H - HOME LEAVE:
    ANNUAL LEAVE:                       I - COP:
    SICK LEAVE:                         J - JURY:
    COMP TAKEN:                         M - MILITARY:
    LWOP:                               R - REL CT USED:
    SUSPENSION:                         T - TIME OFF AWARD:
    AWOL:                               Y - CREDIT EARNED:
    HOLIDAY:                            Z - REL CT EARNED:
    RESTORED LEAVE:
FUNCTION: H= HUNDRED TOT / SCROLL      B= BLOCK TOT  C= CENTER TOT
   PF1= HELP     PF3= PREV SCREEN     PF5= MAIN MENU     PF12= END
```

T&A Reported Hours (QTAR)

DESCRIPTION AND EXECUTION

The T&A Reported Hours (QTAR) template is used to display the control totals for each type of T&A reported hours entered. Totals may be displayed for the center level, payblock level, for groups of 100 employees within each payblock, and for the agency level (for CPO Users). NPPS provides control totals for each type of hours reported, the number of missing T&As, the number of T&As present, the number of T&As in error, and the number of employees reactivated for pay this pay period.

Steps to Reach T&A Reported Hours

1. At the Main Menu, select **2** - Payroll.
2. At the Payroll Main Menu, select **1** - Time and Attendance.
3. At the T&A Main Menu, select **2** - T&A Reported Hours.

DESCRIPTION OF DATA PROCESSING AND OUTPUT

To display the totals you require, select the appropriate function code: **H** for Hundred Totals in the payblock specified, **B** for Payblock Totals in the payblock specified, or **C** for Center Totals.

CPO Center

When T&A Reported Hours (QTAR) is accessed using the CPO USER-ID. CPO User can retrieve and display the control total for each type of T&A reported hours for the Center. A Function of ‘C’ and Pay Block ‘98’ retrieves and displays total for NASA Agency.

4.2.3.1.3 Payroll

```
COMMAND: ________                    NPPS
NAO1550                    PAYROLL REGISTER - QREG       1 OF 3
PAY BLOCK: __ OR SSN: ___ __ ____ NAME: _____________________ _____________ _
****** BASE TO GROSS *****  **************** NET TO GROSS *******************
    ADD:                       ADD: NET + DED             ADD: NET + DED
 BASIC PAY                  NET EARN                   FEHB
 OVERTIME                   ADV PAY                    FERS
 NITE DIF                   BANKRUPTCY                 FERS MIL
 HOL WKD                    BONDS                      FICA
 LUMP SUM                   CFC                        INDEBT US
 UNUS CT PD                 CHILD SUPP                 HIT
 SUN DIF                    C GARNISH                  MISC
 HAZARD                     CIV SV CR                  NEBA
 FOREN-DIF                  CITY TAX                   STATE TAX
 SUPER DIFF                 COUNTY TAX                 TSP
 RET ALLOW                  CSRS                       TSP LOAN
 STAFF DIFF                 CSRS MIL                   UNION
*AUO                        FED TAX                    VOL ALLOT
 LOCAL PAY                  FEGLI                         SUB TOT
-------------------------------------------------------------------------------
 PF1= HELP          PF3= PREV SCREEN     PF5= MAIN MENU       PF7= BACKWARD
 PF8= FORWARD       PF9= NAME SEARCH     PF12= END
```

Payroll Register - QREG (Page 1)

```
COMMAND: ________                    NPPS
NAO1550                    PAYROLL REGISTER - QREG       2 OF 3
PAY BLOCK: __ OR SSN: ___ __ ____ NAME: _____________________ _____________ _
****** BASE TO GROSS *****  **************** NET TO GROSS *******************
                               ADD: ADJUSTMENTS           LESS: REFUNDS/CREDIT
 BASIC ADJ                     (-)                        (+)
 OT ADJ                     BILL OF CO                 BOND REF
 NITE ADJ                   CFC                        CFC
 HOL WKD AD                 CITY TAX                   CITY TAX
 SUN ADJ                    CIV SV CR                  CIV SV CR
 HAZ ADJ                    CNTY TAX                   CNTY TAX
 FIR PR ADJ                 COLA                       COLA
 FOR DF ADJ                 CSRS                       CSRS
 SUP DF ADJ                 EIC                        EIC
 RET AL ADJ                 FED TAX                    FED TAX
 STF DF ADJ                 FEGLI                      FEGLI
*AUO    ADJ                 FEHB                       FEHB
 LOCAL  ADJ                 FERS                       FERS
                            FICA                       FICA
-------------------------------------------------------------------------------
 PF1= HELP          PF3= PREV SCREEN     PF5= MAIN MENU       PF7= BACKWARD
 PF8= FORWARD       PF9= NAME SEARCH     PF12= END
```

Payroll Register - QREG (Page 2)

```
COMMAND: ________                    NPPS
NAO1550                    PAYROLL REGISTER - QREG       3 OF 3
PAY BLOCK: __ OR SSN: ___ __ ____ NAME: ______________________ _____________ _
****** BASE TO GROSS *****  **************** NET TO GROSS ********************
                              ADD: ADJUSTMENTS           LESS: REFUNDS/CREDIT
                              (-)                        (+)
                           HIT                        HIT
                           ST TAX                     ST TAX
                           TSP ADJ                    TSP ADJ
                           TSP LOAN                   TSP LOAN
                           UNION DUES                 UNION DUES
                           ADV PAY                    ADV PAY
   SUB TOT                    SUB TOT                    SUB TOT
 LESS:S CUT                                              LESS:
   TOT ERN                                            EIC AMT(+)
                                                      COLA   (+)

   TOT ERN                                               TOT ERN
-------------------------------------------------------------------------------
 PF1= HELP          PF3= PREV SCREEN     PF5= MAIN MENU       PF7= BACKWARD
 PF8= FORWARD       PF9= NAME SEARCH     PF12= END
```

Payroll Register - QREG (Page 3)

DESCRIPTION AND EXECUTION

The Payroll Register (QREG) template is used to retrieve and display payroll register summary information for an individual employee, single payblock, or for the entire center.

<u>Steps to Reach Payroll Register</u>

1. At the Main Menu, select **2** - Payroll.
2. At the Payroll Main Menu, select **1** - Time and Attendance.
3. At the T&A Main Menu, select **3** - Payroll Register.

This template is composed of three screens. You may move forward by pressing **PF8** and backward by pressing **PF7**.

DESCRIPTION OF DATA PROCESSING AND OUTPUT

To view the totals for an individual, enter the individual's payblock and SSN in the fields provided at the top of the page and press **ENTER**. To view the totals for a single payblock, enter only the payblock number and press **ENTER**. To view the totals for the entire center, enter the number **99** in the payblock field and press **ENTER**.

The label AUO will be replaced with AVAIL PAY if the employee is getting availability pay.

When Payroll Register screen is accessed using CPO USER-ID. CPO User can retrieve and display payroll register summary information for an individual employee, single payblock, the Center, or NASA Agency using Pay Block 98.

4.2.3.2 Vouchering Main Menu

```
COMMAND: ________                N P P S
NAO4000                  VOUCHERING MAIN MENU - VOUCHMEN
-------------------------------------------------------------------------------


                  ENTER ONE OF THE FOLLOWING SELECTIONS: _

                      1 - VOUCHER CHAIN (SF2812,SF2812A,
                          OPM1523, TSP-2)

                      2 - SF1166 CHAIN

                      3 - REGISTER TOTALS

                      4 - ACCOUNTING BREAKOUTS



-------------------------------------------------------------------------------
          PF1= HELP        PF5= MAIN MENU           PF12= END SESSION
```

Vouchering Main Menu (VOUCHMEN)

DESCRIPTION AND EXECUTION

The Vouchering Main Menu (VOUCHMEN) is used to select one of the four options available for viewing the vouchering screens which contain the online voucher information, as illustrated in Figure 4.2.2.2-1, Vouchering.

<u>Steps to Reach Vouchering Main Menu</u>

1. At the Main Menu, select **2** - Payroll.
2. At the Payroll Main Menu, select **4** - Vouchering.

4.2.3.2.1 Voucher Chain

```
COMMAND: ________                    NPPS
NAO4900   VOUCHER INFORMATION - SF2812, SF2812A, AND OPM1523 INSURANCE
-------------------------------------------------------------------------------
LIFE INSURANCE       EMPL  W.H.      GOVT. CONTR.     DEDUCTIONS   NOT DEDUCTED
   BASIC LIFE            68.66            34.34              7            50
   OPT A STND             7.00                               1             8
   OPT B ADDL            17.60                               1            12
   OPT C FAMILY           4.60                               3            15
        TOTAL            97.86                              12            85
OPT B BREAKOUT
    UNDER-35                                                 2
       36-39                                                 1
       40-44
       45-49            10.40                                              4
       50-54             7.20                                1             2
       55-59                                                              1
       60-64                                                              2
       65-69
       70-UP            17.60                                1            10
-------------------------------------------------------------------------------
 PF1= HELP      PF3= PREVIOUS            PF5= MAIN MENU     PF12= END SESSION
                          ENTER= NEXT SCREEN
```

Voucher Information - SF 2812, SF 2812A, and OPM 1523 Insurance

```
COMMAND: ________
NAO4300                            NPPS
    VOUCHER INFORMATION - SF2812, SF2812A, AND OPM1523 FEHB BREAKOUT
-------------------------------------------------------------------------------
                        HEALTH BENEFITS DEDUCTIONS
    ENROLL                                -------- NUMBER OF PAYMENTS --------
   CODE NO.             AMOUNT            MADE   NOT MADE SPOUSAL FULL PREMIUM

      D21                                            1
      UM1                                            1
      UP1                                            1
      UP2                                            1
      V11                                            2
      V12                202.79             1        1
      101                                            4
      102                                            3
      104                 67.68             1        6
      105                284.42             2        8
      311                                            1
      312                                            1
-------------------------------------------------------------------------------
 PF1= HELP   PF3= PREV SCREEN   PF5= MAIN MENU   PF12= END   ENTER= NEXT SCREEN
```

Voucher Information - SF 2812, SF 2812A, and OPM 1523 FEHB Breakout (Page 1)

```
COMMAND: ________
NAO4300                              NPPS
    VOUCHER INFORMATION - SF2812, SF2812A, AND OPM1523 FEHB BREAKOUT
--------------------------------------------------------------------------------
                        HEALTH BENEFITS DEDUCTIONS


 EMPLOYEE AMT                   564.87
 GOVT. CONTR                    163.30
 CASH COLL.
 SPOUSAL PAYMT.                 150.00
 YTD FEHB ADJ (THIS PP)

 TOTAL FEHB                     878.17





--------------------------------------------------------------------------------
   PF1= HELP                   PF5= MAIN MENU                  PF12= END
                             ENTER= NEXT SCREEN
```

Voucher Information - SF 2812, SF 2812A, and OPM 1523 FEHB Breakout (Page 2)

```
COMMAND: ________                    NPPS
NAO4960    VOUCHER INFORMATION - SF2812 & OPM1523 RETIREMENT (1 OF 2)
--------------------------------------------------------------------------------

                                DOLLAR        AGG BASE         DEDUCTIONS
   CSRS                         AMOUNT         SALARY        MADE  NOT MADE

RETIRE TOTAL - EMPL                 1023.23        14617.60
RETIRE TOTAL - EMPR                 1123.23

 WITHOLDING - ALL CATEGORIES        1023.23        14617.60      6     36
 EMPR       - ALL CATEGORIES        1023.23
 SAL OFFSET REEMPLD ANNUIT           100.00                             5
 MILITARY SERVICE DEPOSIT
 CIVILIAN SERVICE CREDIT




--------------------------------------------------------------------------------
  PF1= HELP      PF3= PREVIOUS        PF5= MAIN MENU        PF12= END SESSION
                             ENTER= NEXT SCREEN
```

Voucher Information – SF 2812 Retirement (Page 1)

```
COMMAND: ________                    NPPS
NAO4960    VOUCHER INFORMATION - SF2812 & OPM1523 RETIREMENT (2 OF 2)
-------------------------------------------------------------------------------
                                DOLLAR        AGG BASE       DEDUCTIONS
   FERS                         AMOUNT         SALARY       MADE  NOT MADE
RETIRE TOTAL - EMPL                 69.44         2207.62
RETIRE TOTAL - EMPR                329.43
 REGULAR - K EMPL                   14.80         1850.40       1     37
 REGULAR - K EMPR                  238.70
 MIL RESERVE TECH - N EMPL
 MIL RESERVE TECH - N EMPR
 SPECIAL - M EMPL                    4.64          357.22       1      2
 SPECIAL - M EMPR                   90.73
 SAL OFFSET REEMPLD ANNUIT                                             1
 MILITARY SEVICE DEPOSIT            50.00                       1

 TOTAL RETIREMENT                 2545.33                       9     81
 TOTAL EMPLOYEES                   101
-------------------------------------------------------------------------------
  PF1= HELP      PF3= PREVIOUS        PF5= MAIN MENU        PF12= END SESSION
                            ENTER= NEXT SCREEN
```

Voucher Information – SF 2812 Retirement (Page 2)

```
COMMAND: ________                    NPPS
NAO4910                 TSP VOUCHER INFORMATION - TSP2
-------------------------------------------------------------------------------
 CURRENT AND LATE        G FUND        F FUND        C FUND        TOTAL

 EMP DED:
 GOV BASIC:
 GOV MATCH:
 TOTAL:

 NEGATIVE ADJ            G FUND        F FUND        C FUND        TOTAL

 EMP DED:
 GOV BASIC:
 GOV MATCH:
 TOTAL:
                                                CONTROL TOTAL
-------------------------------------------------------------------------------
    PF1 = HELP       PF3 = PREVIOUS        PF5 = MAIN MENU        PF12 = END_
```

Voucher Information - TSP2

DESCRIPTION AND EXECUTION

The Voucher Chain option displays the screens that contain the online voucher information for SF 2812, SF 2812A, OPM 1523 Insurance, and TSP2.

<u>Steps to Reach Voucher Chain</u>

1. At the Main Menu, select **2** - Payroll.
2. At the Payroll Main Menu, select **4** - Vouchering.
3. At the Vouchering Main Menu, select **1** - Voucher Chain.

4.2.3.2.2 SF 1166 Chain

```
COMMAND: ________                    NPPS
NAO4100                  SF1166 INFORMATION - TAPES
-------------------------------------------------------------------------------

 EFT PAYMENTS                    ITEM COUNT                  AMOUNT
   NET PAY                              5                       7033.87
   SAVINGS ALLOTMENTS                   7                        600.00
   TSP LOAN                             1                         54.95
       TOTAL                           13                       7688.82


 NON EFT PAYMENTS                ITEM COUNT                  AMOUNT
   NAME ONLY - OFFICE CKS
   NAME ONLY - AWARDS CKS
   SALARY CHECKS MAILED                 4                       3930.38
   MISCELLANEOUS CHECKS                16                        953.50
      TOTAL                            20                       4883.88


-------------------------------------------------------------------------------
    PF1 = HELP       PF3 = PREVIOUS        PF5 = MAIN MENU        PF12 = END
                         ENTER= NEXT SCREEN
```

SF 1166 Information - Net Pay

```
COMMAND: ________                    NPPS
NAO4200           SF1166 INFORMATION - FEDERAL RESERVE TAXES
-------------------------------------------------------------------------------

           FED TAX               FICA                HIT           COMBINED
          WITHHELD           WITHHELD           WITHHELD              TOTAL

           3574.55             136.87             278.94            3990.36



                                GOVT               GOVT
                                FICA                HIT
                              136.87             278.94



                                           TOTAL FEDERAL RESERVE DEPOSIT
                                                                 4406.17
-------------------------------------------------------------------------------
    PF1= HELP        PF3= PREVIOUS         PF5= MAIN MENU         PF12= END
                              ENTER= NEXT SCREEN
```

SF 1166 Information - Federal Reserve Taxes

```
 END OF DATA
COMMAND: ________                    NPPS
NAO4500               SF1166 INFORMATION - CFC TOTALS

           CFC ORGANIZATION                          AMOUNT

    1989      GULF COAST COMBINED                        1.00
    1989 CFC,HARRISON,HANCOCK                            6.00









    TOTAL AMOUNT                                         7.00
-------------------------------------------------------------------------------
    PF1= HELP      PF3= PREV SCREEN       PF5= MAIN MENU        PF12= END
                          ENTER= NEXT SCREEN
```

SF 1166 Information - CFC Totals

```
END OF DATA
COMMAND: ________                    NPPS
NAO4800                   SF1166 INFORMATION - SF16BOND

           TOTAL BONDS         DENOMINATION            AMOUNT
            PURCHASED
                 1                  50                    25.00
                                    75
                 2                 100                   100.00
                                   200
                                   500
                                  1000





     GRAND TOTAL BONDS PURCHASED                 GRAND TOTAL AMOUNT
                 3                                       125.00
-------------------------------------------------------------------------------
    PF1= HELP        PF3= PREV SCREEN         PF5= MAIN MENU        PF12= END
                          ENTER= NEXT SCREEN
```

SF 1166 Information – Bonds

```
 END OF DATA
COMMAND: ________                    NPPS
NAO4700                SF1166 INFORMATION - UNION DUES

                UNION NAME                        AMOUNT

       TEST UNION 1                                   17.00
       TEST UNION 2                                    4.00
       TEST UNION 3                                    8.00









       TOTAL AMOUNT                                   29.00
-------------------------------------------------------------------------------
  PF1= HELP         PF3= PREV SCREEN         PF5= MAIN MENU       PF12= END
                              ENTER= NEXT SCREEN
```

SF 1166 Information - Union Dues

```
 END OF DATA
COMMAND: ________                    NPPS
NAO4930             SF1166 INFORMATION - STATE/LOCAL TAXES

             STATE/CITY/COUNTY              AMOUNT         GROSS EARNINGS

       CALIFORNIA                            255.59         9999999999.99
       DIST. OF COL                          740.25         9999999999.99









       TOTAL AMOUNT                          632.39         9999999999.99
-------------------------------------------------------------------------------
  PF1= HELP         PF3= PREV SCREEN         PF5= MAIN MENU       PF12= END
                              ENTER= NEXT SCREEN
```

SF 1166 Information - State/Local Taxes

```
COMMAND: ________                    NPPS
NAO4940          SF1166 INFORMATION - MISCELLANEOUS PAYMENTS



                 U.S. DEBT                                  0.00
                 CHILD SUPPORT                              0.00
                 COMMERCIAL GARNISHMENTS                    0.00
                 BANKRUPTCY                                 0.00
                 NEBA                                       0.00
                                                   --------------
                 GRAND TOTAL                                0.00




-------------------------------------------------------------------------------
    PF1= HELP      PF3= PREV SCREEN       PF5= MAIN MENU        PF12= END
                            ENTER= NEXT SCREEN
```

SF 1166 Information - Miscellaneous Payments

DESCRIPTION AND EXECUTION

The SF 1166 Chain option displays the screens that contain the online SF 1166 vouchering information.

<u>Steps to Reach SF 1166 Chain</u>

1. At the Main Menu, select **2** - Payroll.
2. At the Payroll Main Menu, select **4** - Vouchering.
3. At the Vouchering Main Menu, select **2** - SF 1166 Chain.

4.2.3.2.3 Register Totals

```
COMMAND: ________                    NPPS
NAO1550                    PAYROLL REGISTER - QREG       1 OF 3
PAY BLOCK: __ OR SSN: ___ __ ____ NAME: ______________________ ____________ _
****** BASE TO GROSS *****  **************** NET TO GROSS *******************
    ADD:                       ADD: NET + DED             ADD: NET + DED
 BASIC PAY                  NET EARN                   FEHB
 OVERTIME                   ADV PAY                    FERS
 NITE DIF                   BANKRUPTCY                 FERS MIL
 HOL WKD                    BONDS                      FICA
 LUMP SUM                   CFC                        INDEBT US
 UNUS CT PD                 CHILD SUPP                 HIT
 SUN DIF                    C GARNISH                  MISC
 HAZARD                     CIV SV CR                  NEBA
 FOREN-DIF                  CITY TAX                   STATE TAX
 SUPER DIFF                 COUNTY TAX                 TSP
 RET ALLOW                  CSRS                       TSP LOAN
 STAFF DIFF                 CSRS MIL                   UNION
 AUO                        FED TAX                    VOL ALLOT
 LOCAL PAY                  FEGLI                         SUB TOT
-------------------------------------------------------------------------------
 PF1= HELP          PF3= PREV SCREEN     PF5= MAIN MENU       PF7= BACKWARD
 PF8= FORWARD       PF9= NAME SEARCH     PF12= END
```

Payroll Register - QREG (Page 1)

```
COMMAND: ________                    NPPS
NAO1550                    PAYROLL REGISTER - QREG       2 OF 3
PAY BLOCK: __ OR SSN: ___ __ ____ NAME: ______________________ ____________ _
****** BASE TO GROSS *****  **************** NET TO GROSS *******************
                               ADD: ADJUSTMENTS           LESS: REFUNDS/CREDIT
 BASIC ADJ                     (-)                        (+)
 OT ADJ                     BILL OF CO                 BOND REF
 NITE ADJ                   CFC                        CFC
 HOL WKD AD                 CITY TAX                   CITY TAX
 SUN ADJ                    CIV SV CR                  CIV SV CR
 HAZ ADJ                    CNTY TAX                   CNTY TAX
 FIR PR ADJ                 COLA                       COLA
 FOR DF ADJ                 CSRS                       CSRS
 SUP DF ADJ                 EIC                        EIC
 RET AL ADJ                 FED TAX                    FED TAX
 STF DF ADJ                 FEGLI                      FEGLI
 AUO    ADJ                 FEHB                       FEHB
 LOCAL  ADJ                 FERS                       FERS
                            FICA                       FICA
-------------------------------------------------------------------------------
 PF1= HELP          PF3= PREV SCREEN     PF5= MAIN MENU       PF7= BACKWARD
 PF8= FORWARD       PF9= NAME SEARCH     PF12= END
```

Payroll Register - QREG (Page 2)

```
COMMAND: ________                    NPPS
NAO1550                    PAYROLL REGISTER - QREG       3 OF 3
PAY BLOCK: __ OR SSN: ___ __ ____ NAME: ______________________ ____________ _
****** BASE TO GROSS *****  **************** NET TO GROSS ******************
                              ADD: ADJUSTMENTS           LESS: REFUNDS/CREDIT
                              (-)                        (+)
                           HIT                       HIT
                           ST TAX                    ST TAX
                           TSP ADJ                   TSP ADJ
                           TSP LOAN                  TSP LOAN
                           UNION DUES                UNION DUES
                           ADV PAY                   ADV PAY
   SUB TOT                    SUB TOT                   SUB TOT
 LESS:S CUT                                             LESS:
   TOT ERN                                             EIC AMT(+)
                                                       COLA   (+)

   TOT ERN                                                TOT ERN

-------------------------------------------------------------------------------
 PF1= HELP          PF3= PREV SCREEN     PF5= MAIN MENU       PF7= BACKWARD
 PF8= FORWARD       PF9= NAME SEARCH     PF12= END
```

Payroll Register - QREG (Page 3)

DESCRIPTION AND EXECUTION

The Payroll Register (QREG) template is used to retrieve and display payroll register summary information for an individual employee, single payblock, or for the entire center.

Steps to Reach Payroll Register

1. At the Main Menu, select **2** - Payroll.
2. At the Payroll Main Menu, select **4** - Vouchering.
3. At the Vouchering Main Menu, select **3** - Register Totals.

This template is composed of three screens. You may move forward by pressing **PF8** and backward by pressing **PF7**.

CPO Center

When Payroll Register screen is accessed using CPO USER-ID, CPO User can retrieve and display payroll register summary information for an individual employee, single payblock, the Center, or NASA Agency using Pay Block 98.

4.2.3.2.4 Accounting Breakouts

```
COMMAND: ________                NPPS
NAO4950              ACCOUNTING INFORMATION - ACCTBRK  (1 OF 3)
-------------------------------------------------------------------------------

 NET PAY TO EMPLOYEES            00.00  BANKRUPTCY                      00.00
 FEDERAL INCOME TAX              00.00  BILL FOR COLLECTION             00.00
 FICA EMPLOYEES                  00.00  MISC DEDUCTIONS                 00.00
 FICA EMPLOYERS                  00.00  STATE TAX                       00.00
 HIT EMPLOYEES                   00.00  COUNTY TAX                      00.00
 HIT EMPLOYERS                   00.00  CITY TAX                        00.00
 NEBA INSURANCE                  00.00  SAVINGS BONDS(REFUND)           00.00
 COMBINED FEDERAL CAMP.          00.00  ADVANCED PAY DEDUCTIONS         00.00
 UNION DUES                      00.00
 CHILD SUPPORT                   00.00
 INDEBTEDNESS DUE U.S.           00.00
 COMMERCIAL GARNISHMENTS         00.00

-------------------------------------------------------------------------------
     PF1= HELP       PF3= PREVIOUS        PF5 = MAIN MENU         PF12 = END
                            ENTER= NEXT SCREEN
```

Accounting Information - ACCTBRK (Page 1)

```
COMMAND: ________                NPPS
NAO4950              ACCOUNTING INFORMATION - ACCTBRK  (2 OF 3)
-------------------------------------------------------------------------------


TSP (THRIFT SAVINGS PLAN)                FEGLI (EMPLOYEES)               97.86
    CSRS                          00.00     BASIC               68.66
    FERS (EMPLOYEES)              00.00     OPTION A            07.00
    FERS GOV'T BASIC              22.07     OPTION B            17.60
    FERS GOV'T MATCHING           00.00     OPTION C            04.60
                                            FEGLI (EMPLOYERS)               34.34

 FEHB EMPLOYEES                  228.99
 FEHB EMPLOYERS                  489.16
 FEHB CASH COLLECTION             00.00
 FEHB SPOUSAL PAYMENT             00.00



-------------------------------------------------------------------------------
      PF1 = HELP     PF3 = PREVIOUS      PF5 = MAIN MENU      PF12 = END
```

Accounting Information - ACCTBRK (Page 2)

```
COMMAND: ________                NPPS
NAO4950              ACCOUNTING INFORMATION - ACCTBRK  (3 OF 3)
-------------------------------------------------------------------------------
 CSRS: RETIRE TOTAL - EMPL                  1,023.23
       RETIRE TOTAL - EMPR                  1,123.23
         SALARY OFFSET REEMPLD ANNUIT                        100.00
         MILITARY SERVICE DEPOSIT                             00.00
         CIVILIAN SERVICE CREDIT                              00.00
 FERS: RETIRE TOTAL - EMPL                     69.44
       RETIRE TOTAL - EMPR                    329.43
         REGULAR - K EMPL                                     14.80
         REGULAR - K EMPR                                    238.70
         MIL RES TECH - N EMPL                                00.00
         MIL RES TECH - N EMPR                                00.00
         SPECIAL - M EMPL                                     04.64
         SPECIAL - M EMPR                                     90.73
         SALARY OFFSET REEMPLD ANNUIT                         00.00
         MILITARY SERVICE DEPOSIT                             50.00

 TOTAL RETIREMENT - CSRS/FERS               2,545.33
-------------------------------------------------------------------------------
      PF1 = HELP     PF3 = PREVIOUS      PF5 = MAIN MENU      PF12 = END
```

Accounting Information - ACCTBRK (Page 3)

DESCRIPTION AND EXECUTION

The Accounting Information (ACCTBRK) template is used to display the accounting information for vouchering purposes.

<u>Steps to Reach Accounting Information (Breakouts)</u>

1. At the Main Menu, select **2** - Payroll.
2. At the Payroll Main Menu, select **4** - Vouchering.
3. At the Vouchering Main select **4** - Accounting Breakouts

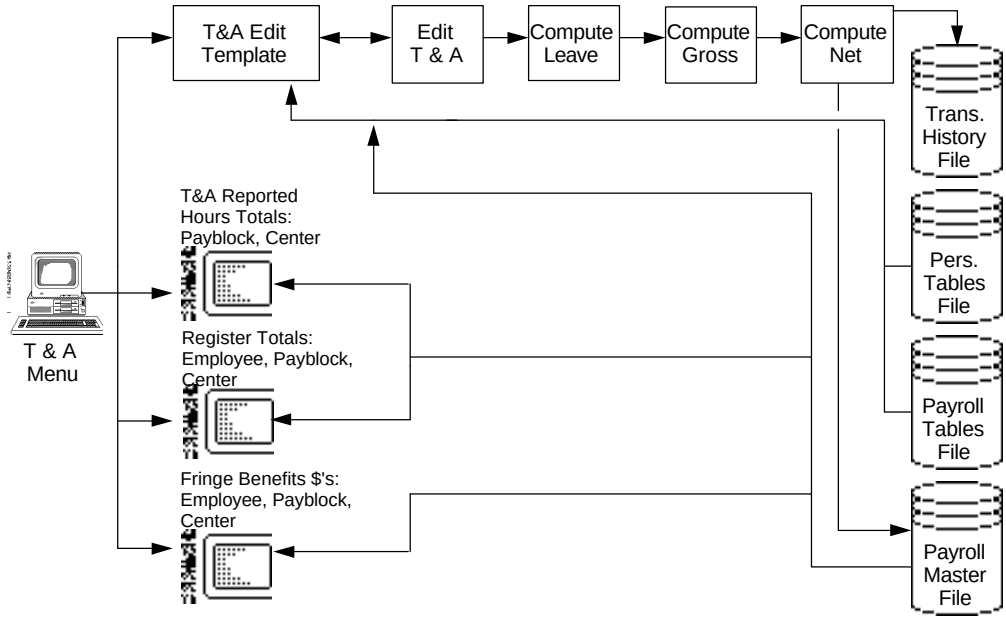

Figure 4.2.2.1-1 T&A Processing

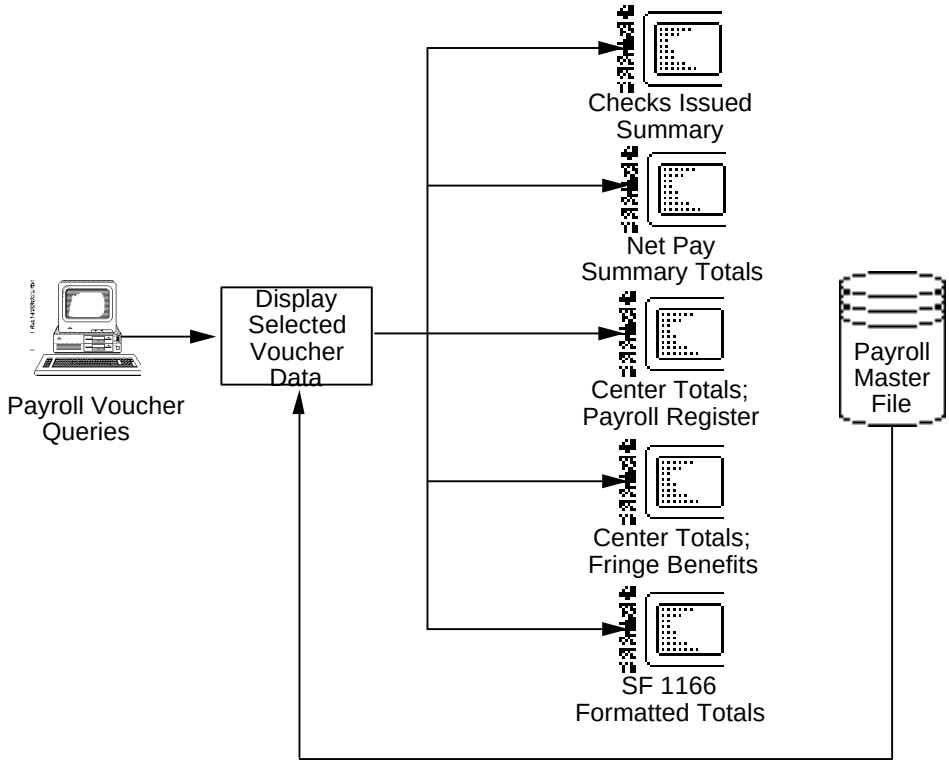

Figure 4.2.2.2-1 Vouchering

4.2.4 Payroll Table Processing

```
COMMAND: ________                N P P S
NAO0000                  PAYROLL MAIN MENU - MMPAY
-------------------------------------------------------------------------------
                    CENTER ID:        NPPS VERSION:
                    ENTER ONE OF THE FOLLOWING SELECTIONS: _

                          1 - TIME & ATTENDANCE

                          2 - MER

                          3 - TABLE PROCESSING

                          4 - VOUCHERING

                          5 - NON-PERSONNEL ACTION CASH AWARDS
-------------------------------------------------------------------------------
 PF1= HELP                  PF5= MAIN MENU                    PF12= END
```

Payroll Main Menu (MMPAY)

DESCRIPTION AND EXECUTION

The Payroll table processing operations are accessed through the Payroll Main Menu (MMPAY). Payroll table processing (illustrated in Figure 4.2.3-1, Payroll Tables) enables you to select and modify the payroll tables.

Steps to Reach Table Processing

1. At the Main Menu, select **2** - Payroll.
2. At the Payroll Main Menu, select **3** - Table Processing.

Throughout the Payroll Table Processing section, special sets of function and PF keys will be available. Though not every function and PF key appears on all screens, the following list is provided so that you may become familiar with them.

Use of Functions

A=Add	Allows you to add a new entry to the table you select.
B=Browse	Allows you to view multiple entries on the same screen.
C=Change	Allows you to change an existing table entry.
D=Delete	Allows you to delete an existing table entry.
N=Next	Allows you to view the next table entry.
R=Retrieve	Allows you to retrieve information on an existing table entry.

Use of PF Keys

Four standard PF keys appear on most menus and templates: PF1=Help, PF3=Previous Screen, PF5=Main Menu, and PF12=End.

4.2.4.1 Payroll Tables Menu

```
COMMAND: ________                    NPPS
NAO2000                  PAYROLL TABLES MENU - PAYTAB
--------------------------------------------------------------------------------
                          TABLE RELEASE:


                     ENTER ONE OF THE FOLLOWING SELECTIONS

                          1  CORE TABLES MAINTENANCE

                          2  LOCAL TABLES MAINTENANCE


                                SELECTION: _




--------------------------------------------------------------------------------
 PF1= HELP                  PF5= MAIN MENU                    PF12= END
```

Payroll Tables Menu (PAYTAB)

DESCRIPTION AND EXECUTION

The Payroll Tables Menu (PAYTAB) is used to maintain payroll tables. This menu offers two selections.

1. Core Tables Maintenance: Select a payroll core table for viewing or updating.
2. Local Tables Maintenance: Select a payroll local table for viewing or updating.

<u>Steps to Reach Payroll Tables Menu</u>

1. At the Main Menu, select **2** - Payroll.
2. At the payroll Main Menu, select **3** - Table Processing.

4.2.4.1.1 Payroll Core Tables Menu

```
* NO MORE TABLE IDS TO DISPLAY (TO REPEAT THE LIST, HIT ENTER)

COMMAND: ________                    NPPS
NAO2001               PAYROLL CORE TABLES MENU - PAYCORE

  TABLE         TABLE                        TABLE         TABLE
   ID        DESCRIPTION                      ID        DESCRIPTION
 --------    ------------------           --------     ------------------

 TBOND       BOND TABLE                   TCASE        ICB AWRDS INST TBL
 TEIC        EARNED INCOME CRED           THAZARD      HAZARDOUS CODE TBL
 THOLIDAY    PAYPERIOD HOLIDAYS           TICBCAT      TYPE OF AWRD INDIC
 TLIFE       LIFE INSURANCE               TLIMIT       MISC. LIMITS
 TMAX        GROSS/OT LIMITS              TMILINT      MILITARY DEP. INT.
 TNEBA       NEBA LIFE                    TNEBATRV     NEBA TRAVEL INSURA
 TPREM       PREMIUM RATES                TRETIR       RETIREMENT RATES
 TSEA        SENIOR EXEC ASSOC            TSTATE       STATE/COUNTRY CODE
 TTAX        FEDERAL/STATE TAX


ENTER THE TABLE ID OF THE TABLE YOU WISH TO PROCESS ==>  ________

--------------------------------------------------------------------------------
 PF1= HELP           PF3= PREV SCREEN   PF5= MAIN MENU        PF12= END
```

Payroll Core Tables Menu (PAYCORE)

DESCRIPTION AND EXECUTION

The Payroll Core Tables Menu (PAYCORE) is used to select a payroll core table to be viewed or updated. The menu lists both the table ID and description for all payroll tables available. Once a table has been selected from the list, the table ID should be typed in the indicated blank. NPPS then displays the requested table one entry at a time. The table may be viewed one entry at a time, a new entry may be added, an existing entry may be changed, or an existing entry may be deleted. Also, if the browse function is available in the list of screen functions, you may select it to view multiple table entries on single screen.

<u>Steps to Reach Payroll Core Tables Menu</u>

1. At the Main Menu, select **2** - Payroll.
2. At the Payroll Main Menu, select **3** - Table Processing.
3. At the Payroll Tables Menu, select **1** - Core Tables Maintenance.
4. At the Payroll Tables Menu, enter the name of the table you want to view or update.

4.2.4.1.2 Payroll Local Tables Menu

```
* NO MORE TABLE IDS TO DISPLAY (TO REPEAT THE LIST, HIT ENTER)

COMMAND: ________                    NPPS
NAO2002              PAYROLL LOCAL TABLES MENU - PAYLOCAL

  TABLE         TABLE                        TABLE         TABLE
   ID        DESCRIPTION                      ID        DESCRIPTION
 --------    -----------------           --------     -----------------

 TCFC        COMBINED FEDERAL             TEMPRID      STATE EMPLOYER ID
 TFIN        FINANCIAL INSTITUT           TUNION       EMPLOYEE UNION









ENTER THE TABLE ID OF THE TABLE YOU WISH TO PROCESS ==>  ________

--------------------------------------------------------------------------------
 PF1= HELP           PF3= PREV SCREEN   PF5= MAIN MENU        PF12= END
```

Payroll Local Tables Menu (PAYLOCAL)

DESCRIPTION AND EXECUTION

The Payroll Local Tables Menu (PAYLOCAL) is used to select a payroll local table to be viewed or updated. The menu lists both the table ID and description for all payroll tables available. Once a table has been selected from the list, the table ID should be typed in the indicated blank. NPPS then displays the requested table one entry at a time. The table may be viewed one entry at a time, a new entry may be added, an existing entry may be changed, or an existing entry may be deleted. Also, if the browse function is available in the list of screen functions, you may select it to view multiple table entries on single screen.

<u>Steps to Reach Payroll Local Tables Menu</u>

1. At the Main Menu, select **2** - Payroll.
2. At the Payroll Main Menu, select **3** - Table Processing.
3. At the Payroll Tables Menu, select **2** - Local Tables Maintenance.
4. At the Payroll Tables Menu, enter the name of the table you want to view or update.

USER INPUT

There are two types of payroll tables; Core tables and Local tables. The Core tables are developed and maintained centrally by the NPPS Development Team. The Local tables are populated and maintained locally by each receiving installation. The following is a list of all the local tables.

TCFC	Combined Federal Campaign	NPPS uses this table to establish legal CFC organizations and address information for those organizations.
TFIN	Financial Institutions	NPPS uses this table to establish the identification and address data for employee net pay dispositions and allotments for electronic funds transfers and checks sent to financial institutions.
TUNION	Union Code	NPPS uses this table to establish the current active unions for the installation.
TEMPRID	State Employer ID	NPPS uses this table to print the employers ID associated with a state code on an employee's W-2 (Core Report 418).

DESCRIPTION OF DATA PROCESSING RESULTS AND OUTPUT

The following is a four-screen example of the table maintenance process. The first screen shows the selection of the State/Country code using the ID TSTATE.

```
* NO MORE TABLE IDS TO DISPLAY (TO REPEAT THE LIST, HIT ENTER)

COMMAND: ________                    NPPS
NAO2001               PAYROLL CORE TABLES MENU - PAYCORE

  TABLE         TABLE                        TABLE         TABLE
   ID        DESCRIPTION                      ID        DESCRIPTION
 --------    ------------------           --------     ------------------

 TBOND       BOND TABLE                   TCASE        ICB AWRDS INST TBL
 TEIC        EARNED INCOME CRED           THAZARD      HAZARDOUS CODE TBL
 THOLIDAY    PAYPERIOD HOLIDAYS           TICBCAT      TYPE OF AWRD INDIC
 TLIFE       LIFE INSURANCE               TLIMIT       MISC. LIMITS
 TMAX        GROSS/OT LIMITS              TMILINT      MILITARY DEP. INT.
 TNEBA       NEBA LIFE                    TNEBATRV     NEBA TRAVEL INSURA
 TPREM       PREMIUM RATES                TRETIR       RETIREMENT RATES
 TSEA        SENIOR EXEC ASSOC            TSTATE       STATE/COUNTRY CODE
 TTAX        FEDERAL/STATE TAX



ENTER THE TABLE ID OF THE TABLE YOU WISH TO PROCESS ==>  __TSTATE_

-------------------------------------------------------------------------------
 PF1= HELP           PF3= PREV SCREEN   PF5= MAIN MENU        PF12= END
```

Payroll Tables Menu with TSTATE

The next screen shows the first entry for this table. Notice that the function has been changed to "B" for Browse.

```
COMMAND: ________                    NPPS
NAO2060                 STATE/COUNTRY CODE TABLE - TSTATE                    2
-------------------------------------------------------------------------------

      FUNCTION: B




                 STATE/COUNTRY CODE:  AK_

                 STATE/COUNTRY NAME:  ALASKA____________




-------------------------------------------------------------------------------
FUNCTIONS:   A= ADD   B= BROWSE   C= CHANGE   D= DELETE   N= NEXT   R= RETRIEVE
 PF1= HELP           PF3= PREV SCREEN   PF5= MAIN MENU        PF12= END
```

State/Country Code

The third screen shows the use of the browse function to display a list of multiple table entries. Notice that the table entry "California" has been marked with an "X" to indicate it is the record to be changed.

```
* TO CHANGE A RECORD, PLACE AN 'X' ON THAT LINE AND HIT ENTER
COMMAND: ________                    NPPS
NAO2060B                  STATE/COUNTRY TABLE BROWSE
-------------------------------------------------------------------------------

     BEGINNING STATE/COUNTRY CODE: CA_

SEL     STATE/COUNTRY   STATE/COUNTRY NAME
           CODE
 _         AK           ALASKA

 _         AL           ALABAMA

 _         AR           ARKANSAS

 _         AZ           ARIZONA

 X         CA           CALIFORNIA


-------------------------------------------------------------------------------
 PF1= HELP           PF3= PREV SCREEN   PF5= MAIN MENU PF7= BACKWARD
 PF8= FORWARD        PF12= END
```

Browse State/Country Code

The final screen displays the "California" entry for the State/Country Code table. In addition, NPPS automatically set the function to "C" for Change.

```
COMMAND: ________                    NPPS
NAO2060                  STATE/COUNTRY CODE TABLE - TSTATE
-------------------------------------------------------------------------------



      FUNCTION: C


                 STATE/COUNTRY CODE:  CA_


                 STATE/COUNTRY NAME:  CALIFORNIA________




-------------------------------------------------------------------------------
FUNCTIONS:   A= ADD   B= BROWSE   C= CHANGE   D= DELETE   N= NEXT   R= RETRIEVE
 PF1= HELP           PF3= PREV SCREEN   PF5= MAIN MENU        PF12= END
```

Change State/Country Name

4.2.5 Non-personnel Action Cash Awards Processing

```
COMMAND: ________                N P P S
NAO7000      NON-PERSONNEL ACTION CASH AWARDS MAIN MENU - CASHMENU
--------------------------------------------------------------------------------



                    ENTER ONE OF THE FOLLOWING SELECTIONS: _


                              1 - CASH AWARDS

                              2 - MASS CASH AWARDS

                              3 - CASH AWARDS QUERY





--------------------------------------------------------------------------------
 PF1= HELP           PF3= PREV SCREEN   PF5= MAIN MENU        PF12= END
```

Non-personnel Action Cash Awards Main Menu (CASHMENU)

DESCRIPTION AND EXECUTION

The non-personnel action cash awards processing operations are accessed through the Payroll Main Menu (MMPAY). This cash awards processing enables you to enter and adjust non-personnel action cash award payment transactions for NASA employees and non-NASA government and non-government employees in the current pay period.

<u>Steps to Reach Non-personnel Action Cash Awards Main Menu</u>

1. At the Main Menu, select **2** - Payroll.
2. At the Payroll Main Menu, select **5** - Non-personnel Action Cash Awards.

4.2.5.1 Cash Awards Processing

```
COMMAND: ________                    NPPS
NAO7110          NON-PERSONNEL ACTION CASH AWARDS - CASHPAY
--------------------------------------------------------------------------------

     SSN      PAYBLK   FUNC       LAST NAME             FIRST NAME     I   SUF
___ __ ____             R     ______________________   ____________   _   ___

AWARD PAYMENT DATE: ________         AWARD TYPE: _         PR NO: __ _____
CASE NO: __ ______            ICB CATEGORY: _       GROSS AMOUNT: _________
                                                    ADJUSTED AMT:

GOV/NON: _    STATE TAX CD: __     CITY TAX CD: ___      OASDI: _    HIT: _
(G OR N)                                                     (Y OR BLANK)

ADDRESS:  ____________________________________
          __________________________
CITY:     ________________           STATE/COUNTRY:  ___  ZIP:  _____ - ____

DUTY STATUS:     INSTALLATION:
--------------------------------------------------------------------------------
FUNCTIONS:   A= ADD      C= CHANGE       N= NAME SEARCH        R= RETRIEVE
 PF1= HELP       PF3= PREV SCREEN        PF5= MAIN MENU        PF12= END
```

Non-personnel Action Cash Awards (CASHPAY)

DESCRIPTION AND EXECUTION

The Non-personnel Action Cash Awards (CASHPAY) template is used to add, retrieve, and change name, address, and awards payment information for a non-personnel action award.

<u>Steps to Reach Non-personnel Action Cash Awards</u>

1. At the Main Menu, select **2** - Payroll.
2. At the Payroll Main Menu, select **5** - Non-personnel Action Cash Awards.
3. At the Non-personnel Action Cash Awards Main Menu, select **1** - Cash Awards.

If you know the award recipient is on the payroll master file or has already received an award through the Non-personnel Action Cash Awards process, you only have to enter the Award Payment Date, Award Type, Case No, and ICB Category. The rest of the data on the screen will be loaded automatically. When you retrieve by SSN only, Award Payment Date will always be pre-loaded along with the display of name and address.

NPPS calculates federal, state, and city tax as well as FICA, HIT, and the net amount appropriately when you enter Gov/Non, State Tax Cd, City Cd, OASDI, and HIT fields. NPPS will update earnings and deductions accumulations for employees at your installation when you add or change a non-personnel action cash award.

4.2.5.2 Mass Cash Awards Processing

```
COMMAND: ________                    NPPS
NAO7120   NON-PERSONNEL ACTION MASS CASH AWARDS - MASSCASH    1 OF 10
--------------------------------------------------------------------------------
    SSN         FUNCTION          LAST NAME            FIRST NAME     I   SUF
 ___ __ ____       R         ______________________    ____________   _
   AWARD PAY DATE:      FROM  ________   TO  ________

   ACT    PAY DATE    TYPE    ICB CAT      PR #        CASE #        AMOUNT
    _
    _
    _
    _
    _
    _
    _
    _
    _
    _
--------------------------------------------------------------------------------
FUNCTIONS:   C= CHANGE          N= NAME SEARCH          R= RETRIEVE
      ACT:   X= CANCEL    M= MODIFY                                PF1= HELP
 PF3= PREV SCREEN   PF5= MAIN MENU   PF7= BACKWARD   PF8= FORWARD   PF12= END
```

Non-personnel Action Mass Cash Awards (MASSCASH)

DESCRIPTION AND EXECUTION

The Non-personnel Action Mass Cash Awards (MASSCASH) template is used to display up to 100 awards at a time for a specified individual. It also provides the capability to cancel or navigate to the Non-personnel Action Cash Awards (CASHPAY) template for update on any selected award. Only one award will be processed at a time depending on the action selected (i.e., either entering **X** in the Act field to cancel or **M** to modify an award). When "M" is entered in the Act field, you will be taken to the CASHPAY template where the update process is performed.

<u>Steps to Reach Non-personnel Action Mass Cash Awards</u>

1. At the Main Menu, select **2** - Payroll.
2. At the Payroll Main Menu, select **5** - Non-personnel Action Cash Awards.
3. At the Non-personnel Action Cash Awards Main Menu, select **2** - Mass Cash Awards.

4.2.5.3 Cash Awards Query

```
COMMAND: ________                    NPPS
NAO7130         NON-PERSONNEL ACTION CASH AWARDS REGISTER - QCASH
-------------------------------------------------------------------------------

            GROSS       FED       STATE     CITY      FICA       HIT    AWD CNT

NON-ICB:

ICB AWDS:
 T
 P
 M
 R

TOTAL:

GRAND
TOTAL:
-------------------------------------------------------------------------------

 PF1= HELP         PF3= PREV SCREEN         PF5= MAIN MENU         PF12= END
```

Non-personnel Action Cash Awards Register (QCASH)

DESCRIPTION AND EXECUTION

The Non-personnel Action Cash Awards Register (QCASH) template is used to display the totals and grand totals of awards and dollar amounts for NASA, non-NASA government, and non-government employees effective for the current pay period.

<u>Steps to Reach Non-personnel Action Cash Awards Register</u>

1. At the Main Menu, select **2** - Payroll.
2. At the Payroll Main Menu, select **5** - Non-personnel Action Cash Awards.
3. At the Non-personnel Action Cash Awards Main Menu, select **3** - Cash Awards Query.

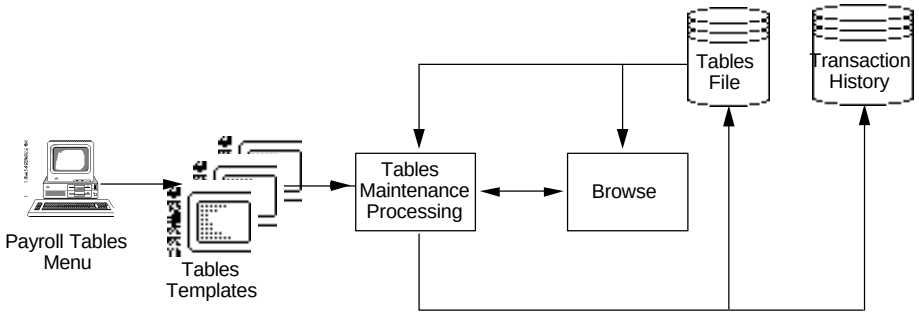

Figure 4.2.3-1 Payroll Tables

4.3 Application Administration

The Application Administration function for NPPS includes five operations.

- Security Maintenance
- Command and Relational Table Maintenance
- Processing Controls
- Help Maintenance
- Ad Hoc Reporting (SUPER NATURAL)

Some of these operations are accessed through the Application Administration subsystem of NPPS (e.g., security maintenance, command and relational table maintenance, and processing controls). Help maintenance as an operation may be performed from any help screen in the entire NPPS help facility. Ad Hoc Reporting using SUPER NATURAL may be accessed only from the NPPS Main Menu.

The professionals who perform these operations are referred to as Application Administrators. Some have expertise in personnel; others have expertise in payroll. Typically, Application Administrators are responsible, directly or indirectly, for inputting data into NPPS to maintain current employee records and extract data from NPPS for batch reporting and/or payroll purposes. Application Administrators perform the five previously listed vital functions which create a link between their functions as users of NPPS and the system operators and database administrators.

4.3.1 Application Administration Menu

```
COMMAND: ________                N P P S
NPO0100                APPLICATION  ADMINISTRATION - ADMMENU
-------------------------------------------------------------------------------
               CENTER ID:         NPPS VERSION:

                 ENTER ONE OF THE FOLLOWING SELECTIONS:


                            1 - SECURITY MAINTENANCE

                            2 - MAINTENANCE UTILITIES

                            3 - PROCESSING CONTROLS

                            4 - JOB SCHEDULER

                SELECTION   _


-------------------------------------------------------------------------------
 PF1= HELP                  PF5= MAIN MENU                    PF12= END
```

Application Administration (ADMMENU)

DESCRIPTION AND EXECUTION

The Application Administration (ADMMENU) menu is used to select one of the four operations required to administer NPPS. These tasks are performed by select personnel and payroll professionals at each installation and at the CPO level.

This section of the UOG describes Security Maintenance (option 1) and Processing Controls (option 3). Most of Maintenance Utilities (option 2) discusses batch job maintenance, which is described in Section 5.0, Batch User Capability. However, the portion of Maintenance Utilities which enables you to view and update the command and relational tables is described in this section. Job Scheduler (option 4) enables you to schedule a batch job which has been predefined by the batch job maintenance utilities. Batch job scheduling is also described in Section 5.0.

<u>Step to Reach Application Administration</u>

1. At the Main Menu, select **3** - Application Administration.

Throughout the Application Administration subsystem, special sets of function and PF keys will be available to you. These functions and PF keys will be defined in each operation. Four standard PF keys appear on most menus and templates: PF1=Help, PF3=Previous Screen, PF5=Main Menu, and PF12=End. Two additional keys, PF7=Backward and PF8=Forward, allow you to move between the pages of a template composed of more than one screen.

4.3.1.1 Security Maintenance

```
COMMAND: ________          NPPS SECURITY MAINTENANCE
NPO1000                           SECURE
-------------------------------------------------------------------------------




              NPPS USERID: ________       FUNCTION: _

                     NAME: ____________   SSN: ___ __ ____

                     INSTALLATION:

                     INSTALLATION NAME:



-------------------------------------------------------------------------------
       FUNCTIONS:    A= ADD    C= CHANGE    R= REVIEW    D= DELETE
 PF1= HELP           PF2= RESET PASSWORD  PF3= PREV SCREEN   PF5= MAIN MENU
 PF9= COPY SECURITY  PF12= END
```

Security Maintenance (SECURE)

DESCRIPTION AND EXECUTION

The Security Maintenance (SECURE) template is used by the Security Administrator to set up and maintain the NPPS security profiles for all individuals who use NPPS, as illustrated in Figure 4.3.1.1-1. A Payroll Administrator establishes and maintains security profiles for members of payroll; a Personnel Administrator establishes and maintains security profiles for members of personnel. The NPPS Master Administrator establishes and maintains security profiles for other Security Administrators. Your security profile tells NPPS which subsystems you may access and what tasks you are authorized to perform. You may enter the security section and view only your own security profile without special Security Administrator permissions.

The Consolidated Payroll Office (CPO) Security Administrator maintains the security profiles to process Payroll for each Center. A security profile set up by the CPO User is automatically copied to access to all NASA Centers listed in NPPS Core Table TINSTAL1. CPO User security profile cannot differ between Centers.

<u>Steps to Reach Security Maintenance</u>

1. At the Main Menu, select **3** - Application Administration.
2. At the Application Administration Menu, select **1** - Security Maintenance

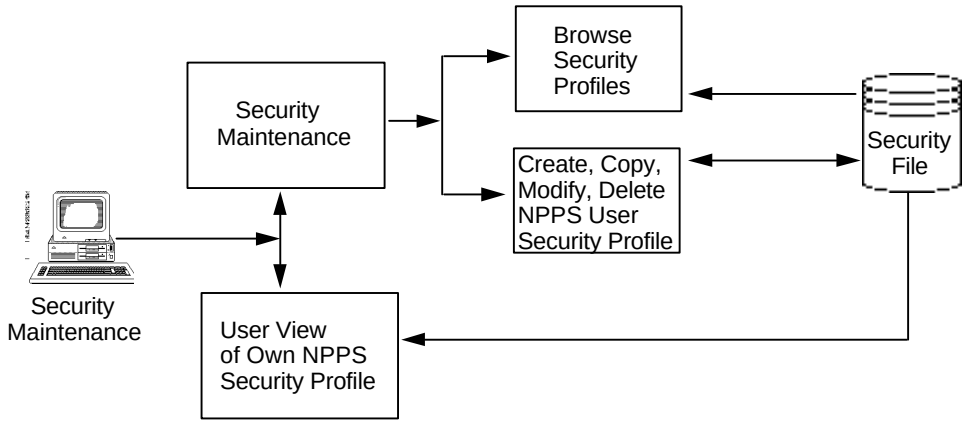

Figure 4.3.1.1-1 Security Maintenance

Use of Functions

A=Add	Allows a Security Administrator to add a new profile.
C=Change	Allows a Security Administrator to change an existing profile.
R=Review	Allows a Security Administrator to view an existing profile. This function also allows any individual to view his/her own profile.
D=Delete	Allows a Security Administrator to delete an unwanted profile, such as a separated employee.
L=List	Allows a Security Administrator to list the name, SSN, and user-id for each of the security profiles the administrator may maintain. This function is only available from the Security Administrator Permissions template.

Use of PF Keys

PF2=Reset Password - Enables a Security Administrator viewing the Security Maintenance template to reset a user's password.

PF4=Securfun - Allows a Security Administrator viewing the Security Profiles listing to proceed to the Functional Security Permissions template rather than return to the Security Administrator Permissions template.

PF9=Copy Security - Enables a Security Administrator viewing the Security Maintenance template to copy an existing profile, creating two identical profiles for two different system users. PF9 (Copy Security) causes NPPS to display the Security Copy template. The Security Administrator may then enter the name of the user-id for the original profile, and the user-id, name, and SSN for the user to receive the second and identical profile.

When signed-on as a CPO User, a PF9 will copy a security profile to another CPO User only if the new User's USER-ID begins with the specific CPO-ID.

DESCRIPTION OF DATA PROCESSING RESULTS AND OUTPUT

In order to add, review, change, or copy a profile, you must access and utilize multiple security maintenance templates. Following are the names and descriptions of the six security templates.

Security Menu	Allows the entry of the user-id whose profile is to be added or modified according to the function specified.
Security Copy	Allows a Security Administrator to copy an existing profile, creating two identical profiles for two different system users.
Security Administrator	Allows the review, creation, or maintenance of a Security Administrator profile.
Permissions	Allows a Security Administrator to view a listing of the names and user-ids of the profiles the administrator may maintain. This listing may only be requested of the Security Administrator Permissions template.
Security Functional Level	Allows the review and maintenance of functional level authorizations for a specified profile.
Security Detail Permission	Allows the review and maintenance of detail level authorizations for a specified profile.

The following screen displays a request to review a profile. In this example, the individual who is assigned this profile is a Security Administrator. Therefore, the Security Administrator Permissions template may be viewed.

```
COMMAND: ________          NPPS SECURITY MAINTENANCE
NPO1000                           SECURE
-------------------------------------------------------------------------------




              NPPS USERID: ________       FUNCTION: _

                     NAME: ____________   SSN: ___ __ ____

                     INSTALLATION:

                     INSTALLATION NAME:



-------------------------------------------------------------------------------
       FUNCTIONS:    A= ADD    C= CHANGE    R= REVIEW    D= DELETE
 PF1= HELP           PF2= RESET PASSWORD  PF3= PREV SCREEN   PF5= MAIN MENU
 PF9= COPY SECURITY  PF12= END
```

Security Maintenance (SECURE)

Establishing a given security profile requires entries on one or more of the three types of Security Permission templates: (1) Functional Security Permissions, (2) Detail Level Permissions, and (3) Administrator Permissions.

Functional	Every profile must have entries on the Functional Security Permissions template. This is the screen that designates Permissions for the major NPPS processes; master employee record updates, personnel actions, etc.
Detail	A given security profile may require entries on one or more Level Detail Level Permission template(s). The major processes Permissions which are subdivided into detail levels of permission are identified by a "D" to the right of the function name. For example, both Personnel and Payroll Table Maintenance display a "D" meaning that a given profile may have permission to review and/or update certain tables, but have no access to other tables.
Administrator	If the security profile is that of a System Administrator, the Permissions profile must also include entries on the Administrator Permissions template.

Throughout the security permission templates, three codes are used to designate the level of permission for a given function: Blank = No Access, R = Review and U = Update.

Blank	User may not view any part of the function.
Review	User may view all portions of the function, but may not change any data.
Update	User may view all portions of the function and update data.

In addition, the code "X" is used to assign individual authority at a template level within a selected functional area. The "X" may be entered for only those functions designated by "D." Detail permission means the individual may view and/or update specific items within the function.

The next few pages illustrate an example security profile. This illustration is provided to further clarify the major three types of templates that may compose a Security Profile.

```
COMMAND: ________                NPPS SECURITY
NPO1100                 ADMINISTRATOR PERMISSIONS - SECURADM
-------------------------------------------------------------------------------

 NPPS USERID: NPSNEW__  FUNCTION: R  NAME: KATE JOHNSON  SSN: 444 44 4444


                PAYROLL     PERSONNEL    APPLICATIONS


                   U            _             _



-------------------------------------------------------------------------------
   FUNCTIONS:   C= CHANGE   R= REVIEW   L= LIST(ADMINISTRATOR ONLY)
 PERMISSIONS:   U= UPDATE   R= REVIEW   BLANK= NO ACCESS
 PF1= HELP           PF3= PREV SCREEN    PF5= MAIN MENU        PF12= END
```

Security Administrator Permissions (SECURADM)

On the Security Administrator Permissions (SECURADM) template, the code "U" (Update) in one or more of the three categories of administrator (payroll, personnel, and applications) identifies this profile as a Security Administrator. This means that the individual may add or update other profiles within the same center as the administrator himself. The code "R" (Review) means that the individual may review, but not add or update profiles for other individuals within the same center. If all three categories are left blank when the profile is added, the individual will not be able to update any profiles and he/she will only be able to view his/her own profile. After the profile is added, this template will only be

displayed if it has not been left blank, i.e., if one or more of the categories contains a "U" (Update) or "R" (Review).

To see all NPPS user-ids, enter code **L**. The user must have administrator status to view this list.

```
COMMAND: ________                NPPS SECURITY
NPO1110                   SECURITY PROFILES-SECURLIST
---------------------------  INSTALLATION  9999 ------------------------------
     SSN          NAME      USERID        PAYROLL    PERSONNEL   APPLICATIONS
 111-11-1111  DAVE          DAVID                        Y            Y
 222-22-2222  DAVID         NPS1090          Y           Y            Y
 333-33-3333  SAM JONES     SAM                                       Y
 444-44-4444  TOM WILSON    TOM


 PF1= HELP            PF3= PREV SCREEN   PF4= SECURFUN         PF5= MAIN MENU
 PF7= BACKWARD        PF8= FORWARD       PF12= END
```

Password List

```
COMMAND: ________                  NPPS SECURITY
NPO1300           FUNCTIONAL SECURITY PERMISSIONS - SECURFUN
-------------------------------------------------------------------------------
  NPPS PASSWORD: ________  FUNCTION: R  NAME: _______       SSN: ___ __ ____
--- PAYROLL ----- LEVEL --- PERSONNEL ---- LEVEL ----- APPLICATIONS -- LEVEL --
  PAYBLOCK ACCESS         PERSONNEL ACTIONS   U D    HELP MAINTENANCE     U
                          PLANNING ACTIONS    U      RELATIONAL TABLES    U D
 Y Y Y Y Y Y Y Y Y Y      MATURE PROCESS      U      PAYROLL CONTROLS     U
 1 2 3 4 5 6 7 8 9 10     SF-50 PROCESS       U      PERSONNEL CONTROLS   U
(BLANK = NONE, Y = YES)   TABLES MAINTENANCE  U D    NPPS COMMAND MAINT   U
                           ACI PROCESS        U      EXTERNAL COMMANDS    U D
TIME AND ATTENDANCE  U D  MASS ACTIONS        X D    BATCH JOB MAINT      U
MASTER EMPLOYEE REC  U D  SERVICE RECORD      U      BATCH JOB SCHEDULE   7
VOUCHERING           U    PERSONNEL HISTORY   U      BATCH JOB CATEGORY   3
TABLES MAINTENANCE   U D                             INSTALLATION TABLE   U
CASH AWARDS          U D                             SUBMIT STARTUP       7
                                                     SF52 DATA ACCESS     Y D
                                                     ERROR BYPASS         U
   FUNCTIONS:  C= CHANGE     R= REVIEW
 PERMISSIONS:  U= UPDATE     R= REVIEW     X= DETAIL     BLANK= NO ACCESS
 PF1= HELP   PF3= PREV SCREEN   PF4= SELECT DETAIL   PF5= MAIN MENU   PF12= END
```

Functional Security Permissions (SECURFUN)

All profiles must have one or more entries on the Functional Security Permissions (SECURFUN) template. The functions are divided into three categories: payroll, personnel, and applications. Typically, payroll clerks will have permission to access functions in only the payroll column and personnel clerks will have permission to access functions in only the personnel column. Supervisors will typically have permission to access functions in two or more columns.

Payroll functions include 10 payblocks and 5 major functions of which 4 possess detail levels of permission. Access to a payblock is indicated by "Y" for yes; blank means no access. Global access to one or more of the 5 major functions is indicated by "U" (Update) or "R" (Review) code in the corresponding blank.

Detail level access may be defined by entering "X" in the corresponding blank. For more information on detail levels of permission, refer to the procedures for "Steps to Add a New Profile" in the latter part of this section.

There are 9 personnel functions. Global access to one or more of the 9 major functions is indicated by "U" (Update) or "R" (Review) code in the corresponding blank. Three of the 9 major functions have accompanying detail levels of permission. Detail level access may be defined by entering "X" in the corresponding blank. For more information on detail levels of permission, refer to the procedures for "Steps to Add a New Profile" in the latter part of this section.

There are 13 application functions. Each will be explained individually as they are unique to the NPPS application and therefore assumed to be unfamiliar to even the most experienced personnel or payroll professional.

APPLICATION FUNCTIONS

FUNCTION	EXPLANATION
Help Maintenance	This function enables authorized individuals at your installation to customize the help screens. The code "U" Update enables the individuals with this profile to add and update help screens. Since all individuals may view the accompanying help screens for all menus and templates which they are allowed to access, the "R" (Review) for review is not necessary and this function may be left blank unless update capability is required.
Relational Tables	Relational Tables Update enables authorized individuals to establish special edit parameters for personnel. Global access to this function is indicated by "U" (Update) or "R" (Review) code. This enables the individual to update or review all the Relational Edit Tables. Detail level access to specific tables may be defined by entering **X** in the corresponding blank. This enables the individuals to update and/or review only selected tables. For more information on detail levels of permission, refer to the procedures for "Steps to Add a New Profile" in the latter part of this section.
Payroll Controls	This function enables authorized individuals to update the payroll control data such as Personnel Mature Lock, Default Payblock for Accessions, and other information used in determining how and when to perform certain payroll processing. The code "U" (Update) enables the individual to update the information contained in this record. The code "R" (Review) enables the individual to review, but not change this information.

FUNCTION	EXPLANATION
Personnel Controls	This function enables authorized individuals to update the personnel data such as Human Resources Office ID, Mail Code and Organization, as well as other information used in determining report cut-off dates, trigger periodic reports, and trigger on-request reports. The code "U" (Update) enables the individual to update the information contained in this record. The code "R" (Review) enables the individual to review, but not change this information.
NPPS Command	This function enables authorized individuals to define new Maintenance commands or template IDs for use within the NPPS application. The code "U" (Update) enables the individual to update the information contained in this record. The code "R" (Review) enables the individual to review, but not change this information. In order to access this function, "U" (Update) or "R" (Review) must be entered in the Maintenance Utilities function.
External Commands	This function enables authorized individuals to define new commands for use with installation-unique user interface systems. Global access to this function is indicated by "U" (Update) or "R" (Review) code. This enables the individual to update or review all the External Commands. Detail level access may be defined by entering **X** in the corresponding blank. This enables the individuals to update and/or review only selected External Commands. For more information on detail levels of permission, refer to the procedures for "Steps to Add a New Profile" in the latter part of this section. In order to access this function, "U" (Update) or "R" (Review) must be entered in the Maintenance Utilities function.
Batch Maintenance	This function enables authorized individuals to create new batch jobs and update existing batch jobs. Access to this function is indicated by "U" (Update) or "R" (Review) code. This enables the individual to update or review all the functions which compose Batch Job Maintenance. In order to access this function, "U" (Update) or "R" (Review) must be entered in the Maintenance Utilities function.

FUNCTION	EXPLANATION
Batch Job Schedule	This function enables an authorized individual to schedule and evaluate the status of batch jobs. Access to this function is indicated by an "R" or the numbers 1 - 7. The "R" permission enables an authorized individual to view the list of batch jobs and the status of scheduled jobs, but not actually schedule a job. A numeric code will allow the user to schedule a job and alter the status of a scheduled job. The description of each numeric code is as follows. Code 1 Schedule Payroll jobs only Code 2 Schedule Personnel jobs only Code 3 Schedule Other jobs only Code 4 Schedule Payroll and Personnel jobs Code 5 Schedule Payroll and Other jobs Code 6 Schedule Personnel and Other jobs Code 7 Schedule any job R Review all jobs Blank No access
Batch Job Category	This function defines the type of batch jobs an individual may schedule, providing the individual has update (U) authority for Batch Job Schedule. There are three codes which represent the three batch job categories: 1 = Schedule process jobs only, 2 = schedule report jobs only, and 3 = schedule both process and report jobs.
Installation Table	This function enables authorized individuals to update the information for his/her own installation, such as installation name and location, NEBA check name and location, Federal Reserve Bank Name and location, and TSP contact name and phone number. Access to this function is indicated by "U" (Update) or "R" (Review) code. This enables the individual to update or review all the information regarding his/her installation.

FUNCTION	EXPLANATION
Submit Startup	This enables an authorized individual to pass the startup job to the Job Entry Subsystem (JES) for execution. This job checks the Batch Job Scheduler for jobs waiting to be executed and passes them one by one to JES. Startup will only pass jobs to JES that match the user's submit startup code. The description of the startup codes is as follows. Code 1 Startup Payroll jobs only Code 2 Startup Personnel jobs only Code 3 Startup Other jobs only Code 4 Startup Payroll and Personnel jobs Code 5 Startup Payroll and Other jobs Code 6 Startup Personnel and Other jobs Code 7 Startup any job Blank No access
SF52 Data Access	This option is only available for those who have first been given access to Update or Review SF52 Personnel Action Processing (PERACT52). This access is granted through Personnel Actions Detailed Permission Level (SECURFUN). This function limits an authorized individual's access to SF52 Personnel Data based on Organization: Assigned or Organization: Located. "Blank" indicates there is no limitation and all SF52 Personnel Action Data can be accessed. A code of "Y" is used to limit access to data to those Organization Codes listed on SF52 Data Access Detailed Permission Level screen
Error Bypass	This function enables an authorized individual to bypass the single and relational edits checks which are built into the personnel actions processing. This means that an action may be placed on the suspense file, and even matured, without passing the edit checks. The only (non-blank) code for this function is "U" (Update) which authorizes an individual to bypass the built-in edit checks while processing a personnel action.

The following screen represents a Detail Level Permissions template. This level is composed of 11 templates, each representing 1 of the 11 functional security items followed by "D" on the Functional Security Permissions template. A profile will have one or more entries on these templates if one or more of the functional security items is marked with "X." Typically, a single profile will have detailed level permissions for only one or two functional security items depending on the job requirements.

```
 * EXAMPLE SECURITY CHANGED. RETURN TO MAIN MENU TO INITIALIZE

 COMMAND: ________                NPPS SECURITY
 NPO1320                     DETAIL LEVEL PERMISSIONS -  SECURTAB
-------------------------------------------------------------------------------
NPPS USERID:    NPSNEW    FUNCTION: R   NAME: KATE JOHNSON  SSN: 300 33 44
PAYCORE   U   PAYLOCAL    U   PAYTAB     R   TBOND     R   TCASE     R TCFC  U
TEIC      U   TEMPRID     U   TFIN      U   THAZARD   U   THOLIDAY   R
TICBCAT   U   TLIFE       U   TLIMIT     U   TMAX      U   TMILINT    U TNEBA U
TNEBATRV  U   TPREM       U   TRETIR     R   TSEA      U   TSTATE     U TTAX  U
TUNION    U         _           _           _           _           _
       _           _           _           _           _           _
       _           _           _           _           _           _
       _           _           _           _           _           _
       _           _           _           _           _           _
       _           _           _           _           _           _
       _           _           _           _           _           _
       _           _           _           _           _           _
-----------------------------------------------------------------------------
  FUNCTIONS:    C= CHANGE       R= REVIEW
PERMISSIONS:    R= REVIEW          U= UPDATE       BLANK= NO ACCESS
  PF1= HELP     PF3= PREV SCREEN    PF7= BACKWARD     PF8= FORWARD     PF12= END
```

Detail Level Permissions (SECURTAB)

This specific Detail Level Permissions (SECURTAB) template is for the Payroll Tables Maintenance function. It lists the 24 individual payroll tables by their abbreviated title. To the right of each abbreviated table name is a blank which is used to indicate the access authority for that particular table. Table names followed by "U" (Update) may be viewed and the data they contain may be updated. Table names followed by "R" may be viewed only. Table names followed by a blank may not be viewed. All detail level permissions are granted in the same manner. For more information on detail levels of permission, refer to the procedures for "Steps to Add a New Profile" in the latter part of this section.

<u>Steps to Review a Profile</u>

1. At Security Maintenance, type the user-id of the profile to be reviewed.
1. Type **R** in the Function space.
3. Press **ENTER** to view the name, SSN, and installation of the profile.
4. Press **ENTER** to proceed to the Security Administrator Permissions template if you are reviewing the profile of a Security Administrator. If you are not reviewing the profile of a Security Administrator, you will proceed directly to the Functional Security Permissions template.

5. Place your cursor on any entry to the left of a "D" and press **PF4** (Select Detail) to view the detail level permission for the specified function.
6. Press **PF5** (Main Menu) to return to the Security Maintenance template.

Steps to Add a New Profile

1. At Security Maintenance, type the user-id, name, and SSN of the new profile.
2. Type A in the Function space and press **ENTER** to begin the Add process.
3. Type the temporary password (twice for verification) to be assigned to the user and press **ENTER** to begin the Add process.
4. Press **ENTER** again to proceed to the Security Administrator Permissions template.
5. Enter the permission levels required on the Security Administrator Permissions template and press **ENTER** to proceed to the Functional Security Permissions template.
6. Enter the permission levels required on the Functional Security Permissions template by entering U for update capability, R for review only capability, and "blank" for no access.

   The functions which are followed by "D" have detail level authorizations. For example, both personnel and payroll tables maintenance functions have detail level authorizations; an individual may be allowed to update some tables, view others, and may not have any access at all to the remaining tables. If an individual is given global authority at the functional level for an item with detail level authorizations, this individual will have the same permission for all the detail level authorizations ("U" for update in the functional level space for personnel or payroll tables maintenance means that the individual using this profile may update all the tables).

   To assign detail level authorizations for a given function enter X in the space to the right of the function and press **ENTER**. The cursor will move to the next line automatically.

   Return the cursor to the "D" for the function and press **PF4** to view the detail level authorizations. Continue to define the profile by placing U or R in the appropriate detail authorizations fields and leave the remainder of the fields blank.
7. To grant update authorization for one or more payblocks, enter Y in the payblocks of your choice (NPPS will not accept "U" or "R" for these functions).
8. Batch Job Category refers to the authorization for scheduling various jobs. A "1" indicates the individual using this profile may schedule process batch

jobs only. A "2" indicates authorization to schedule report batch jobs only, and a "3" indicates authorization to schedule both process and report batch jobs.

9. Press **ENTER** to complete the add process for the new profile. You will receive a message confirming your successful addition of this profile. Press **PF3** (Previous Screen) to view the Functional Security Permissions for the new profile.

10. Press **PF5** (Main Menu) to return to the Security Maintenance template.

Note: The steps to changing an existing profile are almost identical to adding a new profile. The Function changes to "C," and you need only make changes on the selected templates.

Steps to Copy a Profile

1. At Security Maintenance, press **PF9** (Copy Security) to proceed to the Security Copy template.
2. Type the user-id of the original profile and the user-id, name, and SSN of the user to receive the second and identical profile and press **ENTER**.
3. Type the temporary password (twice for verification) to be assigned to the user.
4. Press **ENTER** to complete the process of copying a profile. You will then see a message which confirms you have successfully completed the profile copy process.
5. Press **PF5** (Main Menu) to return to the Security Maintenance template.

Steps to Delete a Profile

1. At Security Maintenance, type the user-id of the profile to be deleted.
2. Type D in the Function space.
3. Press **ENTER** to view the name and SSN for the profile to be deleted.
4. Press **ENTER** again to view a message asking you to confirm your request to delete this profile by pressing **PF11**.
5. Press **PF11** and view a message which confirms the profile has been deleted.

Steps to Define Data Access Restrictions

Data access restrictions are only in effect during SF52 Personnel Action processing. Authorization to access an employee's personnel record is determined by Organization: Assigned or Organization: Located listed on SF52 Data Access Restrictions screen.

1. At the Functional Security Permissions template, enter a **Y** for SF52 Data Access located under the Applications column.
2. Press **PF4** to set the detail level authorizations (refer to the following screen). Three levels of restrictions may be defined.

   Specific/Level - Only personnel records with organization codes or levels matching the codes entered at this level may be accessed. Up to 10 individual organization codes/levels may be listed. When specifying levels, up to five organization levels may be listed; however, each lower level organization code must be preceded by its corresponding higher level organization code.

   Range - Only personnel records with organization codes falling alphabetically between the codes entered at this level may be accessed. Both the "to" and "from" organization codes must be listed.
3. To remove restrictions, enter a "blank" for SF52 Data Access.

```
COMMAND: ________                NPPS SECURITY
NPO1330                 SF 52 DATA ACCESS RESTRICTIONS
-------------------------------------------------------------------------------
 NPPS USERID  :            FUNCTION: _   NAME:                SSN:

     ACCESS PERMISSIONS             ORGANIZATION ASSIGNED CODES
    --------------------          -----------------------------------
       SPECIFIC/LEVEL              _____  _____  _____  _____  _____
                                   _____  _____  _____  _____  _____

       RANGE                       _____ - _____

     ACCESS PERMISSIONS             ORGANIZATION LOCATED CODES
    --------------------          -----------------------------------
       SPECIFIC/LEVEL              _____  _____  _____  _____  _____
                                   _____  _____  _____  _____  _____

       RANGE                       _____ - _____
-------------------------------------------------------------------------------
  FUNCTIONS:  C= CHANGE     R= REVIEW
 PF1= HELP                    PF3= PREV SCREEN                  PF12= END
```

SF 52 Data Access Restrictions

4.3.1.2 Command and Relational Table Maintenance Menu

```
COMMAND: ________                N P P S
NPO2000                 MAINTENANCE  UTILITIES --MAINTUTL
-------------------------------------------------------------------------------


                 ENTER ONE OF THE FOLLOWING SELECTIONS:


                            1 - COMMAND TABLE

                            2 - BATCH JOB MAINTENANCE

                            3 - RELATIONAL TABLES



                SELECTION   _


-------------------------------------------------------------------------------
 PF1= HELP                    PF5= MAIN MENU                    PF12= END
```

Maintenance Utilities (MAINTUTL)

DESCRIPTION AND EXECUTION

The Maintenance Utilities (MAINTUTL) menu enables you to select command table maintenance, batch job maintenance, or relational tables maintenance, as illustrated in Figure 4.3.1.2-1, Utilities. The Batch Job Maintenance option is not described in this section, since it is fully explained in Section 5.0.

1 Command Table: Enables authorized individuals to define new commands or template ID.

3 Relational Tables: Enables authorized individuals to establish special edit parameters for personnel.

<u>Steps to Reach Maintenance Utilities</u>

1. At the Main menu, select **3** - Application Administration.
2. At the Applications Administration Menu, select **2** - Maintenance Utilities.

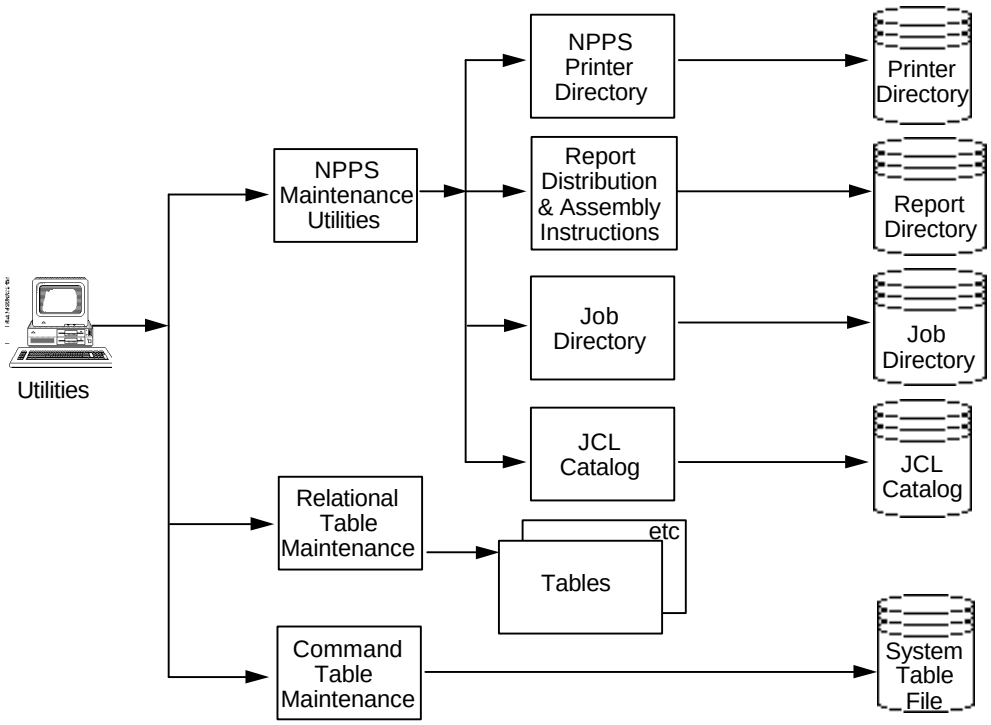

Figure 4.3.1.2-1 Utilities

4.3.1.2.1 Command Table

```
COMMAND: ________                NPPS
NPO2100                 COMMAND TABLE UPDATE - CMDTBL
-------------------------------------------------------------------------------


  FUNCTION: _       TEMPLATE: ________    SUB-SYSTEM: __   AA - ADMINISTRATION
                                                           PA - PAYROLL
                                                           PE - PERSONNEL
                                                           EX - EXTERNAL SYSTEM
                                                           SC - SYSTEM COMMAND

  PROCESSOR: ________    DESC: ___________________    INDEX:

  COMMAND LINE PROCESSING ALLOWED? (Y/N) _

  LOCAL TABLE (Y/N) _


-------------------------------------------------------------------------------
FUNCTIONS:   A= ADD   B= BROWSE   C= CHANGE   D= DELETE   N= NEXT   R= RETRIEVE
 PF1= HELP           PF3= PREV SCREEN   PF5= MAIN MENU        PF12= END
```

Command Table Update (CMDTBL)

DESCRIPTION AND EXECUTION

The Command Table Update (CMDTBL) template enables authorized individuals to view and update the command entries or template IDs. You may add a new command, browse through a list of commands, change an existing command, delete an existing command, view the next command in the table, or retrieve the command of your choice. The functions available for command maintenance are also available for template ID Maintenance.

You may not change the template (name), subsystem, or index once a template ID or command has been added. However, you may update the other input fields as desired. If you want to change a template (name) or subsystem, you must first delete the existing template ID or command and then add the "updated" template (name) as a new template ID or command.

<u>Steps to Reach Command Table Update</u>

1. At the Main menu, select **3** - Application Administration.
2. At the Applications Administration Menu, select **2** - Maintenance Utilities.
3. At the Maintenance Utilities Menu, select **1** - Command Table.

Steps to Maintain a Command or Template ID

1. Enter the required function: **A**=Add, **B**=Browse, **C**=Change, **D**=Delete, **N**=Next, or **R**=Retrieve.
2. Enter the Template as the name of the command or template ID to be maintained.
3. To identify the subsystem to which the template belongs, enter one of the following abbreviations: **AA** - Administration, **PA** - Payroll, **PE** - Personnel, **EX** - External System, or **SC** - System Command.
4. Enter the Processor as the object module the command processor will execute when that template (command) is entered in the command line.
5. Enter the Description of the processor.
6. In the Command Line Processing Allowed space, enter **Y** to allow command line processing for this template; enter **N** not to allow command line processing.
7. If the command or Template ID is used to initiate a table maintenance process, enter **Y** in the Local Table space if the table this command/template ID will process is local; enter **N** if the table is core.

Note: Index refers to the system-generated number for the security of this template.

4.3.1.2.2 Relational Tables

```
* END OF DATA (TO REPEAT LIST, HIT ENTER)

COMMAND: ________                    NPPS
NPO2500             RELATIONAL EDIT TABLES MENU - RELTAB
     ---------------------------------------------------------------------
         OPM                 OPM                 OPM                 OPM
 SEL     EDIT        SEL     EDIT        SEL     EDIT        SEL     EDIT
 ---   --------      ---   --------      ---   --------      ---   --------

  _    RAPPENDG       _    RAPPENDI       _    RAPPENDJ       _    RAPPENDR
  _    RAPPENDU       _    RDCK           _    RDDE           _    RELTAB
  _    REX2           _    RGRQ           _    RLWA           _    RNOO
  _    RPPL           _    RPPO           _    RPSH           _    RPSI
  _    RPSK           _    RREQFLD        _    RSLQ           _    RSLS
  _    RSML           _    RSPC           _    RSPD           _    RSPE
  _    RSPHPPLN       _    RSPHPRAT       _    RSPL           _    RSPN
  _    RSRA           _    RSRV           _    RSRW           _    RSRX
  _    RSTK           _    RSUB           _    RTNK



 ---------------------------------------------------------------------------
 PF1= HELP          PF3= PREV SCREEN          PF5= MAIN MENU          PF12= END
```

Relational Edits Table Menu - RELTAB

DESCRIPTION AND EXECUTION

The Relational Edits Table Menu (RELTAB) enables an authorized individual to select a relational table to be edited. This screen displays a list of the Table IDs for all relational edit tables. To view or maintain one of these tables, enter a **X** next to the desired table ID and press **ENTER**. You will then proceed to a view of the first entry for the table you specified.

The view of the specified table will look different depending on the table chosen. If you choose RAPPENDG, RAPPENDI, RAPPENDJ, RAPPENDR, RAPPENDU, RDDE, REX2, RLWA, RNOO, RPPO, RPSH, RPSI, RREQFLD, RSLQ, RSLS, RSPC, RSPD, RSPE, RSPHPPLN, RSPHPRAT, RSPL, RSRA, RSRV, RSRW, RSRX, RSTK or RSUB from the RELTAB menu, the view will look similar to the APPENDIX G (RAPPENDG) table shown.

```
COMMAND: ________                    NPPS
NPO2427                     APPENDIX G - RAPPENDG
      ---------------------------------------------------------------------------


 FUNCTION: R    NCC: 10000  OCC CODE: ____      OPM EDIT CODE: NSD









---------------------------------------------------------------------------------
FUNCTIONS:    A= ADD    B= BROWSE    D= DELETE    N= NEXT    R= RETRIEVE
 PF1= HELP           PF3= PREV SCREEN    PF5= MAIN MENU        PF12= END
```

Appendix G - RAPPENDG

If you choose RDCK, RGRQ, RPPL, RPSK, RSML, RSPN, or RTNK from the RELTAB menu, the view will look similar to the two versions of the Relational Edit - RPSK table shown below. The first view represents the TRIGGER portion of the edit. The Trigger is the value of a specific field which initiates a check for an acceptable Edit Value in another field. The second view represents the EDIT VALUE portion of the edit. PF9 is used to toggle between the two views. All possible values that can trigger the edit are entered using the Trigger view. All valid values based on the trigger value are entered using the Edit Value view. The text of the edit displayed on both views is derived from table TOPMMSG. The Change function is not allowed on these edits. You can only Add or Delete entries.

```
 COMMAND: ________                    NPPS
 NPO2501                   RELATIONAL EDIT - RPSK
      ---------------------------------------------------------------------------
                                                                        TRIGGER
          FUNCTION:  R

 THE POSITION: OCCUPIED MUST BE 3 OR 4 WHEN THE NOAC IS 142$$, 143$$, 145$$,
146$$, 147$$, 148$$, 149$$, 542$$, 543$$, 546$$, 548$$ OR 549$$. (APR '96)




                                NOAC   142__



---------------------------------------------------------------------------------
 FUNCTIONS:  A= ADD    B= BROWSE    D= DELETE    N= NEXT    R= RETRIEVE
 PF1= HELP    PF3= PREV SCREEN    PF5= MAIN MENU   PF9= EDIT VALUE    PF12= END
```

Relations Edit - RPSK (TRIGGER)

```
COMMAND: ________                    NPPS
NPO2501                  RELATIONAL EDIT - RPSK
     ---------------------------------------------------------------------------
                                                                        EDIT VALUE
         FUNCTION:  R

  THE POSITION: OCCUPIED MUST BE 3 OR 4 WHEN THE NOAC IS 142$$, 143$$, 145$$,
146$$, 147$$, 148$$, 149$$, 542$$, 543$$, 546$$, 548$$ OR 549$$.




                              POSOCC   3



 ---------------------------------------------------------------------------
  FUNCTIONS:  A= ADD    B= BROWSE    D= DELETE    N= NEXT    R= RETRIEVE
  PF1= HELP    PF3= PREV SCREEN    PF5= MAIN MENU   PF9= TRIGGER       PF12= END
```

Relations Edit - RPSK (EDIT VALUE)

While viewing the specified table, you may select to add a new entry, browse a list of entries, change an existing entry (unless otherwise specified), delete an existing entry, view the next entry in the table, or retrieve (jump to) the entry of your choice. Enter the letter representing your choice of functions in the Function blank.

Steps to Reach Relational Tables

1. At the Main Menu, select **3** - Application Administration.
2. At the Applications Administration Menu, select **2** - Maintenance Utilities.
3. At the Maintenance Utilities Menu, select **3** - Relational Tables.

4.3.1.3 Processing Controls Menu

```
COMMAND: _______                N P P S
NPO3000                 PROCESSING  CONTROLS --PROCNTL
 ---------------------------------------------------------------------------


                 ENTER ONE OF THE FOLLOWING SELECTIONS:


                            1 - PAYROLL PROCESSING CONTROL

                            2 - PERSONNEL PROCESSING CONTROL

                            3 - INSTALLATION TABLE

                   SELECTION  _




---------------------------------------------------------------------------
 PF1= HELP                  PF5= MAIN MENU                    PF12= END
```

Processing Controls (PROCNTL)

DESCRIPTION AND EXECUTION

The Processing Controls (PROCNTL) menu allows you to select one of the three options described below.

1 Payroll Processing Control: View or update the Payroll Controls Table

2 Personnel Processing Control: View or update the Personnel Controls Table

3 Installation Table: View or update the Installation Code Table

<u>Steps to Reach Processing Controls</u>

1. At the Main Menu, select **3** - Application Administration.
2. At the Application Administration Menu, select **3** - Processing Controls.

4.3.1.3.1 Payroll Processing Control

```
COMMAND: ________                    NPPS
NPO3100              PAYROLL PROCESSING CONTROL - CTLPAY
------------------------------------------------------------------------------
FUNCTION:  _
                              MANUALLY CONTROLLED

PRIOR LEAVE YEAR ENDING DATE  ________
MATURE LOCK (Y/N)  _        NEBA YEAR  __       PARTIAL/FURLOUGH (Y/ )  _
DEFAULT PAYBLOCK FOR ACCESSIONS  __             TALC INSTALLED (Y/ )  _
TAEDIT SCROLL SEQUENCE   _  (1=PAYBLOCK & SSN 2=PAYBLOCK & NAME 3=SSN 4=NAME)

///////////////////  AUTOMATICALLY UPDATED WITH OVERRIDE  ///////////////////

PAYROLL TABLE LOCK (Y/ )  _              TSP EFFDATE   ________
TSP TAPE SEQ  ____                       TAX QUARTER   _
PAY PERIOD    __                         CURRENT LEAVE PERIOD  __
CURRENT PP BEGINNING DATE ________       MONTH TO DATE (Y/N)   _
CURRENT PP ENDING   DATE  ________       NUMBER OF LEAVE PERIODS THIS YEAR  __
FEGLI YR  ____                           PAYROLL DATA LOCK (Y/ )  _
------------------------------------------------------------------------------
 FUNCTIONS:      A= ADD      C= CHANGE        D= DELETE      R= RETRIEVE
 PF1= HELP            PF3= PREV SCREEN   PF5= MAIN MENU        PF12= END
```

Payroll Processing Control (CTLPAY)

DESCRIPTION AND EXECUTION

The Payroll Processing Control (CTLPAY) template is used to display and update payroll control data defined in the Payroll Control Table. NPPS uses this data to determine if certain processing, such as quarterly processing, should be performed. This information is also used to obtain the pay period date for reports and other processing, and to determine if special or periodic processing is required. The Control Data Table Record must be changed to accommodate the type of processing to be performed.

<u>Steps to Reach Payroll Processing Controls</u>

1. At the Main Menu, select **3** - Application Administration.
2. At the Application Administration Menu, select **3** - Processing Controls.
3. At the Processing Controls Menu, select **1** - Payroll Processing Control.

While viewing the Payroll Processing Control template, you may add new data, change existing data, delete existing data, or retrieve the data. Enter the letter representing your choice of functions in the function blank.

DESCRIPTION OF USER INPUTS FOR PAYROLL PROCESSING CONTROL

MANUALLY CONTROLLED VALUES:

USER INPUTS	DESCRIPTION
Mature Lock (Y/N)	Enter **Y** to stop online personnel mature processing before the pay is computed.
CPO Center	CPO User Enters ‘Y’ or ‘N’ using ‘C’ Change Function, Mature Lock generates a ‘window’ listing all NASA Centers. The Mature Lock, when set, is independent of each Center.
Default Payblock for Accessions	Enter the payblock number that NPPS will automatically assign to an accession (NOAC 1** or ***A) at the time that it is matured. This assignment may be changed later by payroll professional.
TALC Installed	Enter a **Y** to indicate that the Time, Attendance, and Labor Collection/Labor Distribution System (TALC/LD) has been installed. This will tell NPPS to create TALC notifications of NPPS actions. The TALC/LD System is not used at this time.
T&A Scroll Option	Enter **1**, **2**, **3**, or **4** to determine the scrolling order TAEDIT online will use.

VALUES TO BE AUTOMATICALLY UPDATED IN BATCH:

USER INPUTS	DESCRIPTION
Prior Leave Year Ending Date	Enter pay period ending date of the last leave period of the prior leave year. This field is printed on the SF 1150 (Core Report 409).
Payroll Table Lock (Y/)	Enter **Y** to stop table changes after the initial pay computation processing (i.e., lock out online processing).
TSP Effdate	The date to be used for TSP validation, TSP BP Tape, and the TSP Journal Voucher. Date is the current PP Ending Date plus 10 days.
TSP Tape Seq	Sequence number which is increased by an increment of one each pay period during the production of the TSP tape.
Tax Quarter	Calendar year quarter (blank, 1 - 4); will be blank until the last full pay period of the quarter, then it is set to a number which indicates NPPS should generate the quarterly reports produced in the current pay period.
Pay Period	Pay period number (1-27).
Current Leave Period	Leave period number (1-27).
Current PP Beginning Date	Pay period start date (always a Sunday).
Month-to-Date (Y/N)	Indicate "Month-end" with **Y** and "Not Month-end" (i.e., off-month) with **N**.
Current PP Ending Date	Thirteen days from the above PP starting date (always a Saturday).
Number of Leave Periods	Number of leave periods in the current year (26 or 27).
FEGLI Year	The year to be used for FEGLI Age Group calculation.
NEBA Year	Enter the date to be used in NEBA calculation.
Payroll Data Lock	Enter **Y** to stop master file updates after the final reports process has begun (i.e., lock out online processing and Payroll Mature).

```
COMMAND: ________                    NPPS
NPO3100               PAYROLL PROCESSING CONTROL - CTLPAY
      ---------------------------------------------------------------------
FUNCTION:  _
                              MANUALLY CONTROLLED

PRIOR LEAVE YEAR ENDING DATE  ________
MATURE LOCK (Y/N)  _        NEBA YEAR  __       PARTIAL/FURLOUGH (Y/ )  _
DEFAULT PAYBLOCK FOR ACCESSIONS  __             TALC INSTALLED (Y/ )  _
TAEDIT SCROLL SEQUENCE   _  (1=PAYBLOCK & SSN 2=PAYBLOCK & NAME 3=SSN 4=NAME)

///////////////////  AUTOMATICALLY UPDATED WITH OVERRIDE  ///////////////////

PAYROLL TABLE LOCK (Y/ )  _              TSP EFFDATE   ________
TSP TAPE SEQ  ____                       TAX QUARTER   _
PAY PERIOD    __                         CURRENT LEAVE PERIOD  __
CURRENT PP BEGINNING DATE ________       MONTH TO DATE (Y/N)   _
CURRENT PP ENDING   DATE  ________       NUMBER OF LEAVE PERIODS THIS YEAR  __
FEGLI YR  ____                           PAYROLL DATA LOCK (Y/ )  _
-------------------------------------------------------------------------------
 FUNCTIONS:      A= ADD      C= CHANGE        D= DELETE      R= RETRIEVE
 PF1= HELP            PF3= PREV SCREEN   PF5= MAIN MENU        PF12= END
```

Payroll Processing Control - CTLPAY

4.3.1.3.2 Personnel Processing Control

```
COMMAND: ________                    NPPS
NPO3200              PERSONNEL PROCESSING CONTROL - CTLPER
-------------------------------------------------------------------------------

FUNCTION: _

 OFFICE ID  ____                                        REPORT 150,151
 MAIL CODE  ________                                    REPORT 250,251,254,369,372
 CONTACT  ____________________________________           REPORT 250,251,254,369,373
 ORG HIERARCHICAL STRUCTURE  ____                       REPORT 150
 TSP ENROLLMENT DATE (MM DD YY)  __ __ __               REPORT 254

 SIGNATURE CODES:  APPROVING OFFICIAL  _                REPORT 151

 TSP SEASON INDICATOR  _                                EDITING
 MATURE RUNNING (Y/N)  _                                INPUT CONTROL
 POSITION'S   ________________________________________  SF 50/52
 ORG LOCATION ____________________________               PERFORMANCE DATE CODE _

-------------------------------------------------------------------------------
 FUNCTIONS:  A= ADD     C= CHANGE     D= DELETE     R= RETRIEVE
 PF1= HELP          PF3= PREV SCREEN          PF5= MAIN MENU          PF12= END
```

Personnel Processing Control (CTLPER)

DESCRIPTION AND EXECUTION

The Personnel Processing Control (CTLPER) template is used to display and update personnel control data defined in the Personnel Control Table. This data is used by NPPS to determine report cut-off dates, trigger periodic reports, and trigger on-request reports. The Control Data Table Record must be changed to accommodate the type of processing to be performed.

<u>Steps to Reach Personnel Processing Control</u>

1. At the Main Menu, select **3** - Application Administration.
2. At the Application Administration Menu, select **3** - Processing Controls.
3. At the Processing Controls Menu, select **2** - Personnel Processing Control.

While viewing the Personnel Processing Control, you may add new data, change existing data, delete existing data, or retrieve the data of your choice. Enter the letter representing your choice of functions in the function blank.

DESCRIPTION OF USER INPUTS FOR PERSONNEL PROCESSING CONTROL

USER INPUTS	DESCRIPTION
Office ID	Enter the OPM designated number to print on Core Reports 150 (block 48), 151, and Payroll Report 314.
Mail Code	Enter the Mail Code to print on Core Reports 250, 251, 254, 369, and 372
Contact	Enter the Human Resources contact to print on Core Reports 250, 251, 254, and 369.
ORG Hierarchical	Enter the default hierarchical structure for the organizations at your installation. NPPS uses this structure to locate organizational names for printing on SF 50s (For further explanation, refer to Section 4.1.5 under the subheading Interrelationships).
TSP Enrollment Date	TSP Enrollment Date to appear on Core Report 254. Used to determine TSP Eligibility Code for Employee Express Extract to OPM. Used to determine TSP Status Code when employee stops TSP contributions. Must be changed on the first day of Open Season, to be the first day of the first full pay-period in the enrollment month.
Signature Code	Enter the Signature Code that corresponds to the signature Approving Official to print on Core Report 151.
TSP Season Indicator	Indicates whether the TSP season is Open (O) or Closed (C). When the TSP Season is set to Closed, NPPS will only accept TSP Status Codes of Ineligible (I) or Terminated (T). You must change the indicator to Open (O) in order to hire employees with a TSP status of Yes (Y), No (N), or Eligible (E) without bypassing the edits.
Mature Control	This code is program generated, but may be overridden. If you initiate a run of the mature process, NPPS checks this field to verify another mature process is not already running (i.e., this field will have a value of "N"). Then NPPS sets the field to "Y" and begins the mature process you requested. When the mature process is finished, NPPS resets this field to "N" so another mature process may be run at your option. Should NATURAL go down while a mature process is running, you may need to manually reset this field to "N" before you can restart the mature process.

USER INPUTS	DESCRIPTION
Position's Org Location	Enter the name, city, and state where the organization is located as it is shown on the position description to print on the SF 50/52, blocks 14 and 22.
Performance Date Code	Enter a blank to bypass the automatic performance date calculation, a ‘1’ for the EOD Date to be used in the calculation, or a ‘2’ for the current performance evaluation effective date to be used.

Note: There is only one personnel processing control record per installation. This record is automatically retrieved when you move to the Personnel Processing Control template. You may change the record using the function code "C." You do not need to use the function code "R" for retrieve in order to view this record since all information in the record was entered when NPPS was installed at your site. It is unlikely, therefore, that you will add or delete this record.

4.3.1.3.3 Installation Name

```
COMMAND: ________                    NPPS
NPO3300                    INSTALLATION NAME - TINSTALL   1 OF 2
-------------------------------------------------------------------------------
 FUNCTION: _                                DUTY STATION: _________
INSTALLATION NAME/ADDRESS/CITY-STATE-ZIP    ADDITIONAL ADDRESS FOR SSA TAPE
 ________________________________________   ____________________________________
 ______________________________             ____________________________________
 ________________    ___    _________       FEDERAL TAX W2 ID: ____________

*--- FEDERAL RESERVE BANK ----- V O U C H E R --------- TSP CONTACT ----------*
  NAME/ADDR-1/ADDR-2/CITY-STATE-ZIP
 ____________________________________       NAME: ________________________________
 ____________________________________      PHONE: ___________
 ____________________________________        LOC: ________________
 ________________    ___    _________
APPROPRIATION CODE:  ________________________________
BOND FEDERAL RESERVE BANK CITY: ________________
PAYROLL OFFICE NO: ________      AGENCY CODE: ____
-------------------------------------------------------------------------------
FUNCTIONS:   A= ADD     C= CHANGE     D= DELETE                 R= RETRIEVE
 PF1= HELP           PF3= PREV SCREEN   PF5= MAIN MENU        PF7= BACKWARD
 PF8= FORWARD        PF12= END_
```

Installation Name - TINSTALL (Page 1)

```
COMMAND: ________                    NPPS
NPO3300                    INSTALLATION NAME - TINSTALL   2 OF 2
-------------------------------------------------------------------------------
 FUNCTION: _
                                 V O U C H E R
*-------------------------------- NEBA CHECK --------------------------------*

       DEFAULT NEBA CHAPTER                     ALTERNATE NEBA CHAPTER (1)
  NAME/ADDR-1/ADDR-2/CITY-STATE-ZIP          NAME/ADDR-1/ADDR-2/CITY-STATE-ZIP
 ____________________________________       ____________________________________
 ____________________________________       ____________________________________
 ____________________________________       ____________________________________
 ________________    ___    _________       ________________    ___    _________




-------------------------------------------------------------------------------
FUNCTIONS:   A= ADD     C= CHANGE     D= DELETE                 R= RETRIEVE
 PF1= HELP           PF3= PREV SCREEN   PF5= MAIN MENU        PF7= BACKWARD
 PF8= FORWARD        PF12= END_
```

Installation Name - TINSTALL (Page 2)

DESCRIPTION AND EXECUTION

The Installation Name (TINSTALL) template is used to display and update the Installation Code Table. Each NASA installation represents one table entry.

Steps to Reach Installation Name

1. At the Main Menu, select **3** - Application Administration.
2. At the Application Administration Menu, select **3** - Processing Controls.
3. At the Processing Controls Menu, select **3** - Installation Table.

DESCRIPTION OF USER INPUTS FOR INSTALLATION NAME TABLE

In order to retrieve the data for your installation, enter the function code **R** and your installation code, then press **ENTER**. To change data for your installation, change the function code to **C** and type in your changes, then press **ENTER**.

Field Name	Description	Source
Installation Code	Code which identifies the installation	User
Installation Name	Name of the installation.	User
Installation Address	Address of the installation.	User
Installation Duty Station	Duty station code which will be used on certain reports.	User
Additional Address For SSA Tape	Additional address lines used to further identify the installation address when submitting the SSA tape during pay year-end processing.	User
Federal Tax W2 ID	ID assigned by the federal government to the installation; it is read from here and placed on every W-2 during pay year-end processing.	User
NEBA Check: Name Address	Name and address of the institution which receives the NEBA pay from the installation each pay period. Two sets are provided.	User
City-State-Zip	One for the Default NEBA Chapter and another for the Alternate NEBA Chapter.	User
Federal Reserve Bank: Name, Address, City-State-Zip	Name and address of the federal reserve bank which receives the tax pay from the installation each pay period.	User
Appropriation Code	Up to two other appropriation codes may be entered which may be used for other agencies (e.g., Army, when vouchering). These codes appear on the SF 1166 Voucher Schedule of Pay.	User
TSP Contact Name	Name of the installation TSP contact which appears on TSP tape.	User

Field Name	Description	Source
Phone	Phone number of the installation payroll contact which appears on TSP tape and EFT tape.	User
Location	Sixteen-digit number which represents the installation and appears only on TSP tape.	User
Agency Code	Four-digit number which will be assigned (as a default) for accessions.	User
Payroll Office Number	Eight-digit number which identifies the agency and appears on EFT tape and NET tape.	User
Bond Federal Reserve Bank City	Fifteen-digit number which identifies the Bond Federal Reserve Bank City for payroll Core Report 406	User

4.3.1.4 Help Maintenance

You may access the help facility by pressing **PF1** (Help) from any menu or template in the entire NPPS. For example, to access help while viewing the following Master Employee Record Data Entry Menu, press **PF1**.

```
COMMAND: ________                  NPPS
NAO1000          MASTER EMPLOYEE RECORD DATA ENTRY MENU - MMER
-------------------------------------------------------------------------------

                  ENTER ONE OF THE FOLLOWING SELECTIONS: _


                       1 - MASTER SELECTION MER MENU
                       2 - EMPLOYEE LOCATION MENU
                       3 - CURRENT PP PAY ACTIONS MENU
                       4 - LEAVE HOURS ADJUSTMENTS MENU
                       5 - DOLLAR ACCUMULATIONS ADJUSTMENTS MENU
                       6 - MER CONTROLS AND QUERIES MENU
                       7 - PAYROLL SUSPENSE MAINTENANCE QUERY
                       8 - MASS AND GLOBAL TRANSACTIONS MENU
                       9 - START NEW EMPLOYEE ADD CHAIN


-------------------------------------------------------------------------------
 PF1= HELP          PF3= PREV SCREEN   PF5= MAIN MENU        PF12= END
```

Master Employee Record Data Entry Menu

You will then proceed to the first page of the help screen(s) that accompany this particular menu PF1 (refer to the following screens). The help screen(s) which accompany menus always describe the choices available from the menu. The help screen(s) that accompany templates provide an explanation of the function field and refer you to the data dictionary for information regarding other fields which appear on the template.

```
NSS0004                          NPPS
  MODE: DISPLAY              HELP FACILITY

  TEMPLATE ID: MMER            PAGE NUMBER:  1      FUNCTION: R
  ---------------------------------------------------------------------------

  USE:                                TO:

  1 - Master Selection MER Menu     Access any of the MER Modules pertaining
                                    to deductions, pay adjustments, leave
                                    adjustments, YTD, query, miscellaneous,
                                    suspend, and mass.

  2-  Employee Location Menu        Display/update information pertaining to
                                    distribution of pay-related data.

  3 - Current PP Pay Actions Menu   Process current pay period actions.

                                                                Screen 1 of 3
 ---------------------------------------------------------------------------
    FUNCTIONS:   A= ADD   C= CHANGE   D= DELETE   I= INSERT   R= RETRIEVE
  PF1= TOP PF2= DISP/UPDT MODE  PF3= END  PF4= DD PF7= BKWD  PF8= FWD  PF9= COPY
```

Help Facility for MMER (Page 1)

```
NSS0004                          NPPS
  MODE: DISPLAY              HELP FACILITY

  TEMPLATE ID: MMER            PAGE NUMBER:  2      FUNCTION: R
  ---------------------------------------------------------------------------

  USE:                                         TO:

  4 - Leave Hours Adjustments Menu             Update an employee's record to
                                               reflect leave hours.

  5 - Dollar Accumulations Adjustments Menu    Change an employee's dollar
                                               accumulation amounts.

  6 - MER Controls and Queries Menu            Display an employee's payroll
                                               information.


                                                                Screen 2 of 3
 ---------------------------------------------------------------------------
    FUNCTIONS:   A= ADD   C= CHANGE   D= DELETE   I= INSERT   R= RETRIEVE
  PF1= TOP PF2= DISP/UPDT MODE  PF3= END  PF4= DD PF7= BKWD  PF8= FWD  PF9= COPY
```

Help Facility for MMER (Page 2)

```
S0004                          NPPS
      MODE: DISPLAY              HELP FACILITY

      TEMPLATE ID: MMER            PAGE NUMBER:  3      FUNCTION: R
      ------------------------------------------------------------------------------

      USE:                                          TO:

      7 - Payroll Suspense Maintenance Query        Display suspended payroll
                                                    information for an individual
                                                    employee or group of employees.

      8 - Mass and Global Transactions Menu         Access the option to perform mass
                                                    changes on payroll information.

      9 - Start New Employee Add Chain              View a list of new employees
                                                    and initiate the add chain.

                                                                      Screen 3 of 3
     ------------------------------------------------------------------------------
        FUNCTIONS:   A= ADD   C= CHANGE   D= DELETE   I= INSERT   R= RETRIEVE
      PF1= TOP PF2= DISP/UPDT MODE  PF3= END  PF4= DD PF7= BKWD  PF8= FWD  PF9= COPY
```

Help Facility for MMER (Page 3)

Help Screen Conventions

Each help screen, or set of help screens, is unique because it describes the function of the menu or template it accompanies. However, all help screens share some common features and functions.

Title Line One (from left to right):

Mode	This field indicates whether the help facility is displaying the screen in the Display mode, or Update mode. While in the Display mode, the screen may be viewed, but its contents may not be changed. However, in the update mode, the contents of the screen you are viewing may be modified. When the help facility is first requested, NPPS always presents the help screen(s) requested in the Display mode.
NPPS Help Facility	This title appears at the top center of all help screens.

Title Line Two (from left to right):

Template ID	This field displays the abbreviated name of the menu or template the help screen accompanies. For example, the help screen which accompanies the Master Employee Record Data Entry Menu has the template ID of MMER.
Page Number	This number represents the page sequence within a set of help screens. When the help facility is first requested, NPPS displays the first screen in the set of screens (i.e., page 1).
Function	This field identifies the function you want to perform while viewing the help screen. While you are in the Display mode, the function will always be "R" for retrieve. You may change the function only after you have changed the mode to Update.

Bottom Line One (from left to right):

This line displays the five functions available while in the Update mode. While in the Display mode, NPPS requires the function to be "R" for retrieve.

A=Add	Allows you to add a new help screen. You may type in a new template ID and/or page number prior to the add process in order to produce an entirely new screen. This function allows you to expand the help facility to include assistance for requirements that are unique to your installation.
C=Change	Allows you to change the contents of the help screen you are viewing.
D=Delete	Allows you to delete an entire screen at the time you are viewing it. If the screen was part of a set of screens, the page number of any remaining subsequent screen will automatically be renumbered.
I=Insert	Allows you to insert a new page preceding the screen you are viewing. The newly inserted screen will have the same template ID and page number as the original screen you were viewing when the insert request was made. NPPS automatically sets the function on the new screen to change, allowing the inserted screen to be filled with new information. The page number of the original screen and every screen thereafter will be automatically increased by one.
R=Retrieve	Allows you to retrieve a help screen. To view a screen within the help facility while you are viewing a different help screen, type in the template ID and page number of the screen you want to view, and NPPS will display the specified screen.

Bottom Line Two (from left to right):

PF1=Top	Moves the cursor to the top left corner of the help screen.
PF2=Disp/Updt Mode	Allows you to switch from the Display mode to the Update mode and from the Update mode back to the Display mode.
PF3=End	Allows you to leave the help facility and return to the menu or template which you were viewing when you originally requested help.
PF4=DD	Allows you to access the data dictionary.
PF7=Bkwd	Allows you to move through a set of help screens one page at a time, in decreasing page number order.
PF8=Fwd	Allows you to move through a set of help screens one page at a time, in increasing page number order.
PF9=Copy	Allows you to copy an existing set of help screens so that you have two sets with two different template IDs, but identical contents.

Help Screen Maintenance

Authorized individuals may modify the narratives on the help screens by performing any of the procedures explained as follows. Changes made to the help facility are a permanent part of an installation's NPPS system; they may be viewed by any individual who can access the corresponding template or menu. There is no limit to the number of changes that an installation can make to its help facility.

Steps to Retrieve a Specific Help Screen

1. From any template or menu, press **PF1** (Help).
2. Press **PF8** (Forward) and **PF7** (Backward) to move through a set of help screens; or tab to the Page Number field and type in the number of your choice, then press **ENTER** to proceed to the specified page number.
3. Enter a different abbreviated template or menu name in the Template ID field and the desired page number, then press **ENTER** to proceed to the specified help screen.
4. Press **PF3** to leave the help facility and return to the template or menu which you were viewing when you originally requested help.

Note: Any individual may execute the help screen retrieve procedure.

Steps to Change the Contents of a Help Screen

1. Retrieve the help screen to be changed.

2. Press **PF2** to change the mode to Update.

   Note: The function automatically becomes "C" for change.

3. Change the contents of the screen.
4. Press **ENTER** and view a message which indicates the changes have been saved.
5. Press **PF2** to return to the Display mode.
6. Press **PF3** to leave the help facility and return to the template or menu which you were viewing when you originally requested help.

Steps to Insert a Page Within a Set of Help Screens

1. Retrieve the help screen in front of which a new screen is to be inserted.
2. Press **PF2** to change the mode to Update.
3. Change the function to **I** for insert.
4. Press **ENTER** and view the newly inserted screen which has the same template ID and page number as the original screen. The original screen, and any subsequent screens, will be renumbered so their page number is increased by one. The function will automatically change to "C" so the newly inserted screen may be filled with new information. (Refer to "Steps to Change the Contents of a Help Screen" above.)
5. Press **PF2** to return to the Display mode.
6. Press **PF3** to leave the help facility and return to the template or menu which you were viewing when you originally requested help.

Steps to Add a New Set of Help Screens

1. Retrieve any help screen.
2. Press **PF2** to change the mode to Update.
3. Change the function to **A** for add.
4. Type in the template ID and page number for the new screen.
5. Press **ENTER** and view the newly added screen with the new template ID and page number you specified. You may now revise the screens to change the contents you specify.
6. Press **PF2** in order to return to the Display mode.
7. Press **PF3** to leave the help facility and return to the template or menu which you were viewing when you originally requested help.

Steps to Delete a Help Screen

1. Retrieve the help screen to be deleted.

2. Press **PF2** to change the mode to Update.
3. Change the function to **D** for delete.
4. Press **ENTER** and view a message which prompts you to confirm deletion of this screen by pressing **PF11**.
5. Press **PF11** to delete the screen and view a message that the specified screen has been deleted. Any subsequent screens within the set will be renumbered accordingly.
6. Press **PF2** to return to the Display mode.
7. Press **PF3** to leave the help facility and return to the template or menu which you were viewing when you originally requested help.

Steps to Copy a Help Screen

1. Retrieve the help screen or set of screens to be copied.
2. Press **PF9** to proceed to the Copy help screen.
3. Type in the template ID of the existing help screen or set of screens from which you want to copy.
4. Type in a new template ID for the new screen or set of help screens to which you want to copy and press **ENTER**.
5. Type in the new template ID and view the new help screen or set of screens which are the result of the copy process. You now have two different screens or sets of screens with identical contents and unique template IDs.
6. Press **PF2** to return to the Display mode.
7. Press **PF3** to leave the help facility and return to the template or menu which you were viewing when you originally requested help.

4.3.1.5 Ad Hoc Reporting (Super Natural)

```
                                    NPPS
NPO0000                    M A I N   M E N U
-------------------------------------------------------------------------------



            ENTER YOUR PASSWORD AND ONE OF THE FOLLOWING SELECTIONS:


                              1 - PERSONNEL
                              2 - PAYROLL
                              3 - APPLICATION ADMINISTRATION
                              4 - EXIT TO SUPER NATURAL



                  NPPS PASSWORD             SELECTION _

-------------------------------------------------------------------------------
                    PF1= HELP                PF12= END
```

Exit to SUPER NATURAL

DESCRIPTION AND EXECUTION

The adhoc-reporting tool recommended for use with NPPS is SUPER NATURAL. Selecting Exit to SUPER NATURAL (option 4) from the NPPS Main Menu takes you directly to your SUPER NATURAL private library. If you receive a message stating you are not authorized to use SUPER NATURAL, contact your supervisor or SUPER NATURAL system administrator to obtain this authorization. SUPER NATURAL is a commercial product which is distributed and maintained by Software AG. Since you should have access to a SUPER NATURAL User's Manual (also produced by Software AG) the UOG does not explain the use of SUPER NATURAL. Each installation has the responsibility to provide its members with training in basic SUPER NATURAL query and reporting skills.

To learn how to use SUPER NATURAL in conjunction with the NPPS data files, however, we recommend you take one of the NPPS Query and Reporting courses.

5 BATCH USER CAPABILITY

Batch processing allows NPPS processes to be executed at a later time (refer to Figure 5-1, Batch Processing). It is the environment within which all hardcopy reports and tapes are generated due to Multiple Virtual Storage (MVS) constraints. A batch job processing executes in a batch mode rather than online. The job is controlled through MVS and Job Control Language (JCL).

The Batch Job Scheduler (BJS) is the user interface to the batch world. The BJS allows you to schedule, submit, and evaluate batch jobs. When you schedule a batch job, it goes into the BJS queue and will only be executed when the Startup job is run. The Startup job is the execution of a single process which selects and runs the scheduled jobs. This Startup job runs every job which is scheduled in its turn. The jobs are always run one at a time per center including CPO as a separate center.

The Startup job may be run only by authorized individuals. This authorization is granted via a user's security profile. For more information, refer to Section 4.3.1.1.

The Batch Job Maintenance (BJM) Utilities allow you to maintain batch jobs (refer to Figure 5-2, Batch Design). This includes creating new batch jobs to meet the specific requirements of your installation. In this section of the UOG, the BJS and the Batch Job Maintenance Utilities are explained. For information on each of the individual batch jobs, refer to Appendix C.

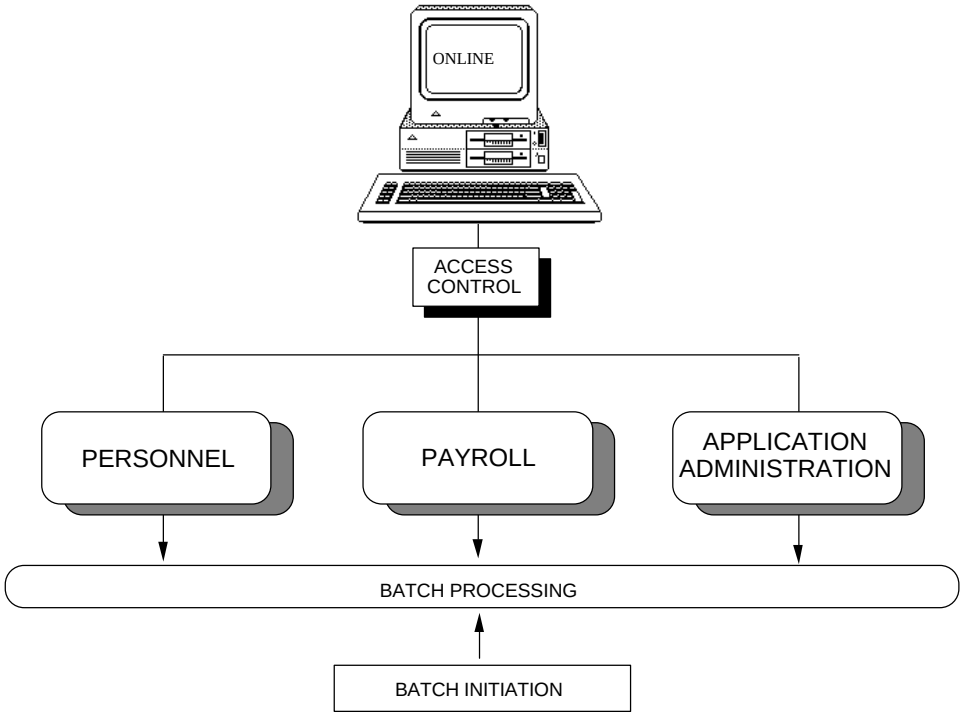

Figure 5-1 Batch Processing

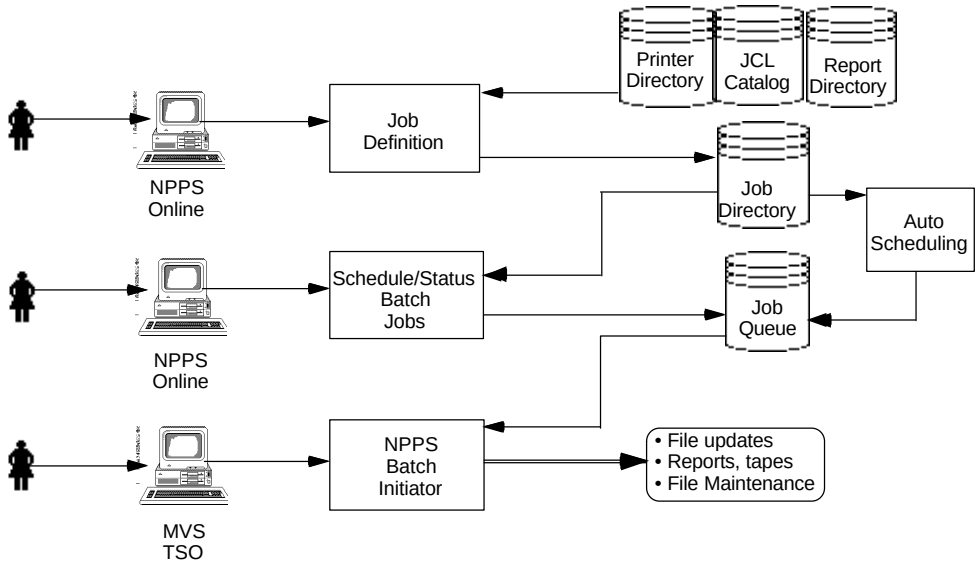

Figure 5-2 Batch Design

5.1 Batch Job Scheduling

During the scheduling process you identify the batch job you want to run (refer to Figure 5.1-1, Batch Job Scheduler). NPPS allows you to accomplish the tasks of scheduling and evaluating batch jobs by displaying a list of all the batch jobs so you may mark the job needed to schedule or evaluate.

In addition, you may alter predefined printer destinations, generate print distribution data, generate printer control instructions, and pass data selection parameters to various NPPS programs.

Batch Job Scheduling is divided into two areas: Process Jobs and Report Jobs. Process jobs cause an update to the NPPS database (e.g., Personnel Mature). Some process jobs result in the production of reports as final output for the process. For instance, Personnel Mature applies the specified actions to the appropriate employee records and generates two reports: the Mature Transaction and Error Report and the Mature Transaction Integration Report. Report jobs cause the production of one or more reports (e.g., Personnel Daily Reports).

Batch jobs are identified by a unique number. All personnel process and report jobs begin with the letters NE, which are followed by zeros and the numeral (which is generally two-digit for a process and three-digit for a report) which represents the specific process (NE00##). All payroll process and report jobs begin with the letters NA, which are followed by zeros and the numeral (which is generally two-digit for a process and three-digit for a report) which represents the specific process (NA000##).

In order to schedule a job, you must first select the type of job (i.e., process or report). NPPS will display a list of all the recognized jobs for the type you specified. Mark the one you wish to schedule by placing **S** for schedule, **H** for hold, or **R** for restart in the Check One column and press **ENTER** to confirm your choice.

You will be prompted to enter changes to the report distribution list of the job and also any required input parameters. The action of scheduling only places the job in the BJS queue (a stored sequence of all jobs that have been scheduled). In order to pass the job to the JES for execution, the Startup job must be run.

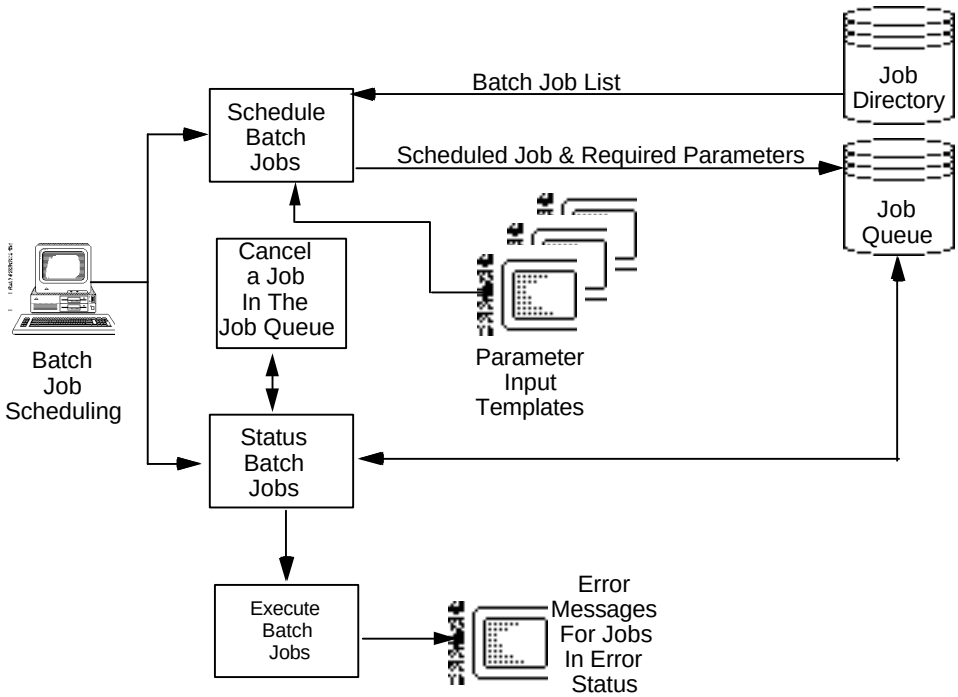

Figure 5.1-1 Batch Job Scheduler

5.1.1 Batch Job Scheduler Main Menu

```
COMMAND: ________          NPPS BATCH JOB SCHEDULER
NPO4000                JOB SCHEDULER MAIN MENU - BJSMM

-------------------------------------------------------------------------------

               ENTER ONE OF THE FOLLOWING SELECTIONS:

                  1 - JOB STATUS

                  2 - PROCESS SCHEDULE LIST

                  3 - REPORT SCHEDULE LIST

                  4 - SUBMIT STARTUP

               SELECTION - _


-------------------------------------------------------------------------------
 PF1= HELP                  PF5= MAIN MENU                    PF12= END
```

Batch Job Scheduler Main Menu (BJSMM)

DESCRIPTION AND EXECUTION

The Batch Job Scheduler Main Menu (BJSMM) is used to select one of the four options available for scheduling and evaluating batch jobs. The BJS allows you to put predefined jobs into the BJS queue and the Startup Job will move the jobs from the BJS queue into the JES. The status of each scheduled job may be reviewed after scheduling.

The jobs are predefined to the BJS through the Batch Job Maintenance Utilities. Typically, a technical system administrator, rather than a functional user, defines batch jobs.

STEPS TO REACH BATCH JOB SCHEDULER MAIN MENU

1. At the Main Menu, select **3** - Application Administration.
2. At the Application Administration Menu, select **4** - Job Scheduler.

Four standard PF keys appear on most menus and templates in the Batch Job Scheduler: **PF1**=Help, **PF3**=Previous Screen, **PF5**=Main Menu, and **PF12**=End. In addition, two keys allow you to move between the pages of a template which is composed of more than one screen: **PF7**=Backward and **PF8**=Forward.

5.1.1.1 Process Schedule List

```
ND: ________          NPPS BATCH JOB SCHEDULER
     NPO4120                PROCESS  SCHEDULE LIST - BJSJOB
     ------------------------------------------------------------------------------
            CHECK
             ONE    JOB TITLE                    JOB NO      FREQUENCY   SEQUENCE

            ( _ )  AUTO SCHED-DELETE            AUTO        ON REQUEST    5
            ( _ )  PAYROLL BATCH MATURE         NA00001     ON REQUEST    1
            ( _ )  NORMAL RECAL                 NA00009     BIWEEKLY      70
            ( _ )  PAY YEAR END                 NA00013     ANNUAL        80
            ( _ )  LEAVE YEAR END               NA00014     ANNUAL        90
            ( _ )  FISCAL YEAR END              NA00015     ANNUAL        100
            ( _ )  MESSAGE LOG                  NA00016     DAILY         110
     ------------------------------------------------------------------------------
      CHECK ONE: S-TO SCHEDULE A JOB   R-TO RESTART A JOB   H-TO PUT A JOB IN HOLD
      PF1= HELP           PF3= PREV SCREEN    PF5= MAIN MENU        PF7= BACKWARD
      PF8= FORWARD        PF12= END
```

Process Schedule List (BJSJOB)

DESCRIPTION AND EXECUTION

The Process Schedule List (BJSJOB) is used to review all processing jobs which have been predefined to the NPPS BJS. Only jobs that match the user's job schedule type (Pay, Per, Other) will be displayed. Individual jobs may be selected for scheduling by placing **S** for Scheduled, **H** for Hold, or **R** for Restart in the Check One column to the extreme left of the job title. Each job may be scheduled up to 26 times before you are required to delete completed jobs to make room for new ones. BJS will notify you of the last letter of the job number by displaying this number on the top line of the screen. You will be asked if you want to alter the distribution list for the job. You may answer "yes" by typing **Y** and pressing **ENTER**. You will then be allowed to view the distribution list (Report Directory Recipient List) and make changes for this run only. BJS will also check for any requirement of external parameters. If external parameters are required, you will be presented with a series of screens which prompt you to enter information. You may schedule only one job at a time.

Several jobs in NPPS have been designed to be restartable. If an error occurs in a restartable job, the BJS Log (refer to Section 5.1.1.3.1) will display a message indicating that a Restart is required. All restartable processes that occur in that job after the error will be skipped. Any job that is scheduled with an "R" (Restarted) will use the parameter and report data from the first failed run, starting with job XXXXXXXA, to eliminate the need to reenter the parameters. If the job to be restarted has been deleted from the BJS Log, all parameters will have to be reentered. If a job is restarted, all output should be collected from the failed run. The restarted job will skip all processes that occurred prior to the error. A job should not be restarted until the problem that caused the error has been corrected.

The sequence number displayed in the right-most column of the Schedule List indicates the order process in which the jobs will run if more than one job is placed in the queue. The job with the lowest sequence number runs first and process jobs run before report jobs.

STEPS TO REACH PROCESS SCHEDULE LIST

1. At the Main Menu, select **3** - Application Administration.
2. At the Application Administration Menu, select **4** - Job Scheduler.
3. At the Batch Job Scheduler Main Menu, select **2** - Process Schedule List.

5.1.1.2 Report Schedule List

```
COMMAND: ________          NPPS BATCH JOB SCHEDULER
NPO4120                REPORT   SCHEDULE LIST - BJSJOB
-------------------------------------------------------------------------------
       CHECK
        ONE    JOB TITLE                    JOB NO      FREQUENCY   SEQUENCE

      ( _ )  T&A REPORTED HOURS           NA00100     ON REQUEST    2
      ( _ )  OLD VERSUS NEW NORMALS       NA00101     ON REQUEST    3
      ( _ )  NET PAY/VOL ALLOT REG EFT    NA00102     ON REQUEST    4
      ( _ )  NET PAY REGISTER NON EFT     NA00103     ON REQUEST    5
      ( _ )  HEALTH INS NOT PAID          NA00104     ON REQUEST    6
      ( _ )  LMTD APPOINT CO-OP           NA00105     ON REQUEST    7
      ( _ )  LMTD APPOINT EMPLOYEE        NA00107     ON REQUEST    10
      ( _ )  MASTER EMPLOYEE REG          NA00200     ON REQUEST    12
      ( _ )  TRANSACTION REPORT           NA00201     ON REQUEST    11
      ( _ )  PAYROLL REGISTER             NA00202     ON REQUEST    13
      ( _ )  LEAVE & PAY INFO             NA00203     ON REQUEST    14
      ( _ )  T&A PAID HOURS               NA00204     ON REQUEST    15
-------------------------------------------------------------------------------
 CHECK ONE: S-TO SCHEDULE A JOB   R-TO RESTART A JOB   H-TO PUT A JOB IN HOLD
 PF1= HELP           PF3= PREV SCREEN    PF5= MAIN MENU        PF7= BACKWARD
 PF8= FORWARD        PF12= END
```

Report Schedule List (BJSJOB)

DESCRIPTION AND EXECUTION

The Report Schedule List (BJSJOB) is used to review all the reporting jobs which have been predefined to the NPPS BJS. Only jobs that match the user's job schedule type (Pay, Per, Other) will be displayed. Individual jobs may be selected for scheduling by placing **S** for Scheduled, **H** for Hold, or **R** for Restart in the Check One column to the extreme left of the job title. Each job may be scheduled up to 26 times before you are required to delete completed jobs to make room for new ones. BJS will notify you of the last letter of the job number by displaying this number on the top line of the screen. You will be asked if you desire to alter the distribution list and parameter data for the job. You may answer "yes" by typing **Y** and pressing **ENTER**. You will then be allowed to view the distribution list (Report Directory Recipient List) and make changes for this run only. BJS will also check for any requirement of external parameters. If external parameters are required, you will be presented with a series of screens which prompt you to enter information. You may schedule only one job at a time.

Several jobs in NPPS have been designed to be restartable. If an error occurs in a restartable job, the BJS Log (refer to Section 5.1.1.3.1) will display a message indicating that a Restart is required. All restartable processes that occur in that job after the error will be skipped. Any job that is scheduled with an "R" (Restarted) will use the parameter and report data from the first failed run, starting with job XXXXXXXA, to eliminate the need to reenter the parameters. If the job to be restarted has been deleted from the BJS Log, all parameters will have to be reentered. If a job is restarted, all output should be collected from the failed run. The restarted job will skip all processes that occurred prior to the

error. A job should not be restarted until the problem that caused the error has been corrected.

The sequence number displayed in the right-most column of the Schedule List indicates the order process in which the jobs will run if more than one job is placed in the queue. The job with the lowest sequence number runs first and process jobs run before report jobs.

STEPS TO REACH REPORT SCHEDULE LIST

1. At the Main Menu, select **3** - Application Administration.
2. At the Application Administration Menu, select **4** - Job Scheduler.
3. At the Batch Job Scheduler Main Menu, select **3** - Report Schedule List.

To update the report distribution list, this screen will be displayed for each report in the job. Output Type, Output ID, and Printer Node may be changed only once.

```
                              NPPS BATCH JOB SCHEDULER
NPO4190                    REPORT DIRECTORY RECIPIENT LIST
--------------------------------------------------------------------------------
   REPORT NO.         JOB NO.              JOB TITLE
    201              NA00001           PAYROLL BATCH MATURE
   REPORT TITLE   201   TRANSACTION REPORT

   PRINT OUTPUT TYPE (H/T/S/B/K)  B        PRINT OUTPUT ID:   CSC01___
                                           PRINTER NODE:   ________
   ------------------------   R E C I P I E N T   -------------------------
     NAME                ADDRESS           COPIES   ASSEMBLY INSTRUCTIONS

    JIM GIBSON_____     CSC BLD 4TH FLR     1_     RB   PRIVATE DATA________
    ______________      ______________      __     ___________________________
    ______________      ______________      __     ___________________________
    ______________      ______________      __     ___________________________
    ______________      ______________      __     ___________________________
    ______________      ______________      __     ___________________________
--------------------------------------------------------------------------------
   PF1= HELP         PF3= CANCEL         PF7= SCROLL UP         PF8= SCROLL DOWN
```

Report Directory Recipient List

5.1.1.2.1 Report Directory Recipient List

```
                          NPPS BATCH JOB SCHEDULER
NPO4190                 REPORT DIRECTORY RECIPIENT LIST
--------------------------------------------------------------------------------
   REPORT NO.         JOB NO.              JOB TITLE

   REPORT TITLE

   PRINT OUTPUT TYPE (H/T/S/B/K)  _        PRINT OUTPUT ID:   ________
                                           PRINTER NODE:   ________
   ------------------------   R E C I P I E N T   -------------------------
     NAME                ADDRESS           COPIES   ASSEMBLY INSTRUCTIONS

    ______________     ______________     __     ________________________
    ______________     ______________     __     ________________________
    ______________     ______________     __     ________________________
    ______________     ______________     __     ________________________
    ______________     ______________     __     ________________________
    ______________     ______________     __     ________________________
--------------------------------------------------------------------------------
  PF1= HELP         PF3= CANCEL         PF7= SCROLL UP         PF8= SCROLL DOWN
```

Report Directory Recipient List

DESCRIPTION AND EXECUTION

The Report Directory Recipient List is used to make changes to the predefined list of recipients for the job you are scheduling. You may specify a maximum of 50 recipients. Any changes you make to this template will not affect the master list maintained with the Batch Job Maintenance Utilities; your changes will only be enacted for this job run.

You may select between four types of output: (**H**) immediate hardcopy (printout) on a printer identified in the printer table, (**S**) special (e.g., auxiliary data line transfer to a printer), (**T**) print tape, (**B**) both special and print tape, or (**K**) both printout and print tape. To indicate your choice, type its corresponding letter in the Print Output Type field.

You may also set the Printer Output ID one time by entering the code for any printer which is defined in the Batch Job Maintenance Printer Table.

If you do not want the report to print, enter **$$$** as the first three characters of the first recipient name (active on payroll process jobs only).

If you select to send your job to a tape, be sure to retrieve the tape number after the job completes. The tape number is trapped for display on the Batch Job Status Log.

STEP TO REACH REPORT DIRECTORY RECIPIENT LIST

You may view the Report Directory Recipient List template during the job scheduling process initiated at either the Process Schedule List template or the Report Schedule List template or through the BJM capability.

5.1.1.3 Batch Job Status

```
COMMAND: ________          NPPS BATCH JOB SCHEDULER
NPO4210                       JOB STATUS - BJSTAJOB
-------------------------------------------------------------------------------
 NEW                                      CURRENT  -----------SCHEDULED---------
STATUS    JOB  TITLE            JOB NO  STATUS      BY         DATE     TIME

( _ ) SF50                      NE0SF50B Finishd KEN SHORT    10-07-98 11:11:46
( _ ) MATURE REPORTS            NE00002B Finishd 1090ADMINIST 10-07-98 15:01:57
( _ ) MATURE REPORTS            NE00002C Schedul 1090ADMINIST 10-07-98 14:49:01
( _ ) ACTION NOT REQ SF50       NE00010A Schedul 1090ADMINIST 10-11-98 11:30:02
( _ ) ACTION NOT REQ SF50       NE00010C Schedul 1090ADMINIST 10-11-98 12:24:06
( _ ) ACTION NOT REQ SF50       NE00010D Schedul 1090ADMINIST 10-11-98 12:27:23
 ( _ )
( _ )
( _ )
NEW STATUS:  D-DELETE  H-HOLD  L-LOG  S-SCHEDULED
ENTER THE NEW STATUS NEXT TO THE JOB YOU WISH TO CHANGE
PF1= HELP            PF3= PREV SCREEN   PF5= MAIN MENU        PF7= BACKWARD
PF8= FORWARD         PF12= END
```

Batch Job Status (BJSTAJOB)

DESCRIPTION AND EXECUTION

The Batch Job Status (BJSTAJOB) template is used to review the status of jobs which have been scheduled. The Current Status field indicates the status of your job. The six possible status types are Hold, Schedule, Finished, Waiting, Running, or Error. After a job is scheduled using either the Process Schedule List or the Report Schedule List, using the **H** (Hold) option, you may change the status to Scheduled when you want the job to be run. Even after a job receives a status of Scheduled, it will not run until the Startup job is submitted (refer to Section 5.1.1.4). If the status is Error, the job has failed for some reason. A status of Waiting means the job has been passed to JES for execution. A status of Running means JES has begun execution of the job.

Individual jobs may be selected for review from this list by entering **L** in the New Status column to the extreme left of the job title. To view a listing, proceed to the Log File template (refer to Section 5.1.1.3.1).

You may select from four New Status options. In addition to viewing a listing of the log messages for a completed job (**L**), you may put a scheduled job on hold (**H**), delete a job which is scheduled, finished, or held (**D**), or schedule a job on hold (**S**).

<u>STEPS TO REACH BATCH JOB STATUS</u>

1. At the Main Menu, select **3** - Application Administration.
2. At the Application Administration Menu, select **4** - Batch Job Scheduler.
3. At the Batch Job Scheduler Main Menu, select **1** - Job Status.

5.1.1.3.1 Log File

```
COMMAND: ________          NPPS BATCH JOB SCHEDULER
NPO4500                        LOG FILE - BJSLOG
-------------------------------------------------------------------------------
       JOB NUMBER:  NT314TPA     JOB TITLE:  TSP TAPE CREATION

   DATE       TIME                    STATEMENT

 10-11-98   10:54:19   The step has successfully started.
 10-11-98   10:54:22   Report number 314PT has started.
 10-11-98   10:54:24   Report number 314PTJ has started.
 10-11-98   10:55:12   Report number 314PT has completed.
 10-11-98   10:55:15   the step has completed successfully.
 10-11-98   11:01:01    JES JOB NAME= DEVNPPSA  JES JOB NUM= JOB00908
 10-11-98   11:01:04   ********** TAPE NUMBERS   ************
 10-11-98   11:01:04   DEVNPPS.TAPE.TSP           SERIAL 208030   208030
 10-11-98   11:01:06   DEVNPPS.TAPE.NA314TP       SERIAL 208287   208287




-------------------------------------------------------------------------------
 PF1= HELP           PF3= PREV SCREEN    PF5=  MAIN MENU       PF7= BACKWARD
 PF8= FORWARD        PF12= END
```

Log File (BJSLOG)

DESCRIPTION AND EXECUTION

The Log File (BJSLOG) template is used to view a list of log messages resulting from the batch job run. The job number, job name, tape number, title, date, and messages are displayed for the job. If any errors occurred during the job execution, they will be noted with the program name, error code, and line number of the error.

STEP TO REACH LOG FILE

The only way to access the Log File is through the Job Status template. For further information, refer to Section 5.1.1.3.

5.1.1.4 Batch Job Startup

```
ENTER BATCH PASSWORD AND CATEGORY

     COMMAND: ________          NPPS BATCH JOB SCHEDULER
     NPO4300                     BATCH JOB STARTUP

     ---------------------------------------------------------------------------


                   ENTER  PASSWORD  AND  CATEGORY CODE: "BATCH JOB ID"

                    BATCH PASSWORD  ________

                          CATEGORY  _
                                        1 - PROCESS
                                        2 - REPORTS
                                        0 - BOTH





     ---------------------------------------------------------------------------
      PF1= HELP                  PF5= MAIN MENU                   PF12= END
```

Batch Job Startup

DESCRIPTION AND EXECUTION

The Batch Job Startup template is used to start the process of passing jobs from the BJS queue to JES. You must enter the correct password in order for the job to run. For CICS, you must logon using the Batch-ID so that the password will be automatically assigned by CICS and this password field will be ignored.

The password is associated with a Batch ID which was set up at the time NPPS was installed at your site. One individual is given responsibility for this Batch ID and this individual sets the original password and all subsequent passwords as they are required. The Startup job acknowledges the password and passes it to each subsequent job. You need only enter the password one time; the Startup job passes the password to the first job, the first job passes the password to the second job, and so on until the last job in the queue receives the password from the previous job. Each installation may have only one Batch ID and, therefore, only one password will be valid at any point in time.

Only jobs that match the user's job startup type will be passed to JES for execution.

In addition to entering the correct password, NPPS allows you to enter a category of job to be run. If you enter a **1** in the blank provided for category, the Startup job will move only process jobs from the BJS queue to the JES. It will "skip over" any report jobs which are present in the queue. If you enter a **2** in this blank, the Startup job will move only report jobs from the BJS queue to the JES.

It will "skip over" any process jobs which are present in the queue. If you enter a **0** or if you leave the blank empty, the Startup job will move both process and report jobs from the BJS queue to the JES for execution.

The only exception to this procedure is the SF 50 job. These jobs run under the ID and password of the individual requesting them. This is because they are started dynamically at the time they are requested and go directly to the JES for immediate execution.

Note: If you enter an obsolete password, the Startup job will fail. This means that the status of the jobs in the queue will remain Scheduled. The status of at least one job should update within a short time (i.e., 15 minutes). If not, contact the owner of the Batch ID and check to see if you have entered the current (valid) password.

If CPO jobs are scheduled (jobs beginning with ‘CA’) to be run before remote jobs (jobs beginning with other than ‘CA’) and Batch Job Startup is selected by a remote user, the CPO job will be ignored and left as scheduled. Only the remote jobs will run.

STEPS TO REACH STARTUP

1. At the Main Menu, select **3** - Application Administration.
2. At the Application Administration Menu, select **4** - Batch Job Scheduler.
3. At Batch Job Scheduler Main Menu, select **4** - Submit Startup.

5.2 Batch Job Maintenance

The Batch Job Maintenance (BJM) functions are divided into four areas: (1) Printer Identification, (2) Report Identification, (3) JCL, and (4) Job Identification.

Printer identification identifies authorized printers to the NPPS BJS. Only these printers may be chosen when scheduling batch jobs.

Report identification defines reports and their distribution lists within each job. It also provides any special printer control instructions, number of copies, and special print form.

JCL provides the capability to create and modify the JCL used by each job. The JCL name and job number used in the Job Identification step must be the same.

Job identification provides the capability to create and modify data describing a specific job, such as its execution frequency, execution sequence number, report output type, and up to 35 parameter edit modules. The job number should conform to the rule of seven characters beginning with NA for payroll and NE for personnel (e.g., NA00000 or NE00000). The job numbers are limited to seven characters with the eighth character (A-Z) being supplied during the scheduling process.

In order to schedule a new batch job, do the following:

1. Update the job directory by defining the new job (i.e., identify the job as a NPPS job by naming it).
2. Build the JCL which will execute when the job is run.
3. Update the report directory by defining the new reports which the job will produce when it is run; this includes defining the distribution list and all the parameters for the reports.

Having completed these three steps, you may view the new batch job from the BJS.

5.2.1 Batch Job Maintenance Utilities Main Menu

```
                                NPPS BATCH JOB MAINTENANCE
NPO2300                    BJM UTILITIES MAIN MENU BJMMM
-------------------------------------------------------------------------------


     ENTER SELECTION AND PRESS RETURN _

                            1 - PRINT DIRECTORY
                            2 - REPORT DIRECTORY
                            3 - JCL CATALOG
                            4 - JOB DIRECTORY


                     INSTALLATION - 9999
                INSTALLATION NAME -  TEST INSTALLATION


-------------------------------------------------------------------------------
 PF1= HELP                  PF5= MAIN MENU                    PF12= END
```

Batch Job Maintenance Utilities Main Menu (BJMMM)

DESCRIPTION AND EXECUTION

The Batch Job Maintenance Main Menu (BJMMM) is used to select one of the four options available in BJM: (**1**) Print Directory, (**2**) Report Directory, (**3**) JCL Catalog, and (**4**) Job Directory.

<u>STEPS TO REACH BATCH JOB MAINTENANCE</u>

1. At the NPPS Main Menu, select **3** - Application Administration.
2. At the Application Administrator Main Menu, select **2** - Maintenance Utilities.
3. At the Maintenance Utilities Menu, select **2** - Batch Job Maintenance.

5.2.1.1 Print Directory Menu

```
                          NPPS BATCH JOB MAINTENANCE
NPO2303                      PRINT DIRECTORY MENU
-------------------------------------------------------------------------------



     ENTER SELECTION AND PRESS RETURN _


                        1 - QUERY BJM PRINT DIRECTORY
                        2 - UPDATE BJM PRINT DIRECTORY









-------------------------------------------------------------------------------
 PF1= HELP                 PF5= MAIN MENU                    PF12= END
```

Print Directory

DESCRIPTION AND EXECUTION

The BJM Print Directory Menu is used to select one of the two functions available within the print directory: (**1**) Query BJM Print Directory or (**2**) Update BJM Print Directory. To view the existing printers defined to the BJM, select Query BJM Print Directory (option 1). To define a new printer or modify a predefined printer, select Update BJM Print Directory (option 2).

<u>STEPS TO REACH PRINT DIRECTORY MENU</u>

1. At the NPPS Main Menu, select **3** - Application Administration.
2. At the Application Administrator Main Menu, select **2** - Maintenance Utilities.
3. At the Maintenance Utilities Menu, select **2** - Batch Job Maintenance.
4. At the Batch Job Maintenance Utilities Menu, select **1** - Print Directory.

5.2.1.1.1 Query BJM Print Directory

```
* REVIEW THE PRINTER DATA THEN USE PF3 TO QUIT
                              NPPS BATCH JOB MAINTENANCE
    NPO2304                    QUERY BJM PRINT DIRECTORY
    ------------------------------------------------------------------------------

     --- OUTPUT --- CONTROL ------------------ H A R D C O P Y -------------------
        ID      CLS  TYPE    BUILDING    ROOM     MODEL        TYPE        ADR(LU#)
     CSC01       H     Y    CSC         4142    2700        LASER PRINTER  C450831P









    ------------------------------------------------------------------------------
     PF1= HELP           PF3= PREV SCREEN   PF5= MAIN MENU        PF7= BACKWARD
     PF8= FORWARD        PF12= END
```

Query BJM Print Directory

DESCRIPTION AND EXECUTION

The Query BJM Print Directory template is used to view the list of printers which may be used during the execution of NPPS batch jobs. This list contains all the authorized NPPS printers. For each printer, it displays the network logical unit (LU) number, output class, building, room number, printer model, and printer type. The four valid output classes are immediate hardcopy (**H**), intermediate tape (**T**), special output (**S**), and WRITER command required in place of DEST (W). NPPS only checks for the Output ID; the other items are entered as general information.

<u>STEPS TO REACH QUERY BJM PRINT DIRECTORY</u>

1. At the NPPS Main Menu, select **3** - Application Administration.
2. At the Application Administrator Main Menu, select **2** - Maintenance Utilities.
3. At the Maintenance Utilities Menu, select **2** - Batch Job Maintenance.
4. At the Batch Job Maintenance Utilities Menu, select **1** - Print Directory.
5. At the Print Directory Menu, select **1** - Query BJM Print Directory.

5.2.1.1.2 Update BJM Print Directory

```
* ENTER FUNCTION AND PRINT-ID THEN PRESS RETURN
                              NPPS BATCH JOB MAINTENANCE
    NPO2308                   UPDATE BJM PRINT DIRECTORY
    ------------------------------------------------------------------------------
           FUNCTION _   PRINT ID ________

          OUTPUT CLASS:                    _
                                               (N) PUT COPIES NUMBER INTO JCL
          PRINT CONTROL RECORD REQUIRED:   _   (Y) PRINTER CONTROL INCLUDES COPIES
                                               (B) PUT COPIES NUMBER INTO BOTH PLACES
               HARDCOPY BUILDING NUMBER:  __________    (EX 'BLDG 17')

               HARDCOPY ROOM NUMBER:      ______        (EX '4142')

               HARDCOPY MODEL NUMBER:     __________    (EX 'XEROX 2700')

               HARDCOPY TYPE:             _____________ (EX 'LASER PRINTER')

               HARDCOPY ADDRESS (L.U.#):  ________      (EX 'C450831P')
    ------------------------------------------------------------------------------
    FUNCTIONS:   A= ADD   C= CHANGE   D= DELETE
     PF1= HELP           PF3= PREV SCREEN   PF5= MAIN MENU        PF12= END
```

Update BJM Print Directory

DESCRIPTION AND EXECUTION

The Update BJM Print Directory template is used to change the information for an existing printer or define a new printer to the BJS. You may also delete an existing printer from the list of NPPS authorized printers.

First, enter the function code to add a new printer (**A**), change an existing printer's information (**C**), or delete an existing printer from the list (**D**) and enter the printer ID, then press **ENTER**.

Next, enter the information regarding your change or addition. To add a new printer, you must fill in all eight fields of mandatory information.

Note: Though NPPS uses only the printer ID and the other fields are for information, the other fields must be completed.

Print ID is the same information you find on the Query template with the label Output ID. This name must be the same as the printer name which exists in the MVS System Printer Table. Output Class is the same information you find on the Query template with the label Output CLS. Marking the Print Control Record field with “Y” causes a printer control instruction with the number of report copies to be appended to the job report data. An "N" does not create a printer control instruction but instead causes the number of report copies to be inserted into the JCL of the job. A value of "B" causes both the appending of the printer control instruction with the copies parameter and the insertion of the number of copies into the JCL of the job. Print Control Record Required is the same information you find on the Query template with the label Control Type. The four valid output

classes are immediate hardcopy (H), intermediate tape (T), special output (S), and WRITER command required in place of DEST (W).

Ensure that the hardcopy type contains ‘XER’ for the Xerox printer, ‘IMP’ for the impact/multiprinter and ‘LAS’ for the laser printer being used for printing SF50/SF52 jobs.

If you are deleting the printer, simply press **ENTER**.

STEPS TO REACH UPDATE BJM PRINT DIRECTORY

1. At the NPPS Main Menu, select **3** - Application Administration.
2. At the Application Administrator Main Menu, select **2** - Maintenance Utilities.
3. At the Maintenance Utilities Menu, select **4** - Batch Job Maintenance.
4. At the Batch Job Maintenance Utilities Menu, select **1** - Print Directory.
5. At the Print Directory Menu, select **1** - Update BJM Print Directory.

5.2.1.2 Report Directory Menu

```
                          NPPS BATCH JOB MAINTENANCE
NPO2310                     REPORT DIRECTORY MENU
-------------------------------------------------------------------------------



     ENTER SELECTION AND PRESS RETURN _

                        1 - QUERY BJM REPORT LIST
                        2 - UPDATE BJM REPORT LIST
                        3 - VIEW REPORT LIST BY JOB NUMBER
                        4 - UPDATE DISTRIBUTION LIST
                        5 - GLOBAL NAME AND/OR ADDRESS CHANGE





-------------------------------------------------------------------------------
 PF1= HELP                  PF5= MAIN MENU                    PF12= END
```

Batch Job Maintenance Report Directory Menu

DESCRIPTION AND EXECUTION

The Batch Job Maintenance Report Directory Menu is used to select one of the five functions available in the Report Directory: (**1**) Query BJM Report List, (**2**) Update BJM Report List, (**3**) View Report List by Job Number, (**4**) Update Distribution List, and (**5**) Global Name and/or Address Change. Items 2 and 4 assume that you know which job the report is in. Write reports to CMPRT01, 02, 03, or 04 in this order.

<u>STEPS TO REACH BATCH JOB MAINTENANCE REPORT DIRECTORY MENU</u>

1. At the NPPS Main Menu, select **3** - Application Administration.
2. At the Application Administrator Main Menu, select **2** - Maintenance Utilities.
3. At the Maintenance Utilities Menu, select **2** - Batch Job Maintenance.
4. At the Batch Job Maintenance Utilities Menu, select **2** - Report Directory.

5.2.1.2.1 Query BJM Report List

```
 * TO VIEW A REPORT - PLACE AN 'X' ON THAT LINE
                          NPPS BATCH JOB MAINTENANCE
NPO2312                     QUERY BJM REPORT LIST
-------------------------------------------------------------------------------
CHECK ---------- REPORT -----------   JOB    HRDCPY S P TOTL XEROX TAPE FORMAT
 ONE   NUMBER         TITLE          NUMBER  FORM # D L COPY     (1ST 18 POS)
  _   100      100   T&A REPORTED H NA00003  STD    S Y  1
  _   100      100   T&A REPORTED H NA00004  STD    S Y  1
  _   100      100   T&A REPORTED H NA00100  STD    S Y  1
  _   101      101   OLD VS NEW NOR NA00003  STD    S Y  1
  _   101      101   OLD VS NEW NOR NA00004  STD    S Y  1
  _   101      101   OLD VS NEW NOR NA00009  STD    S Y  1
  _   101      101   OLD VERSUS NEW NA00101  STD    S Y  1
  _   102      102   NET PAY/VOL AL NA00005  STD    S Y  1
  _   102      102   NET PAY/VOL AL NA00102  STD    S Y  1
  _   103      103   NET PAY DISPOS NA00005  STD    S Y  1
  _   103      103   NET PAY DISPOS NA00103  STD    S Y  1
  _   104      104   HEALTH INSURAN NA00004  STD    S Y  1
-------------------------------------------------------------------------------
 PF1= HELP           PF3= PREV SCREEN   PF5= MAIN MENU        PF7= BACKWARD
 PF8= FORWARD        PF12= END
```

Query BJM Report List

DESCRIPTION AND EXECUTION

The Query BJM Report List template is used to list all the reports within all the jobs recognized by BJM. The Report Number is the report tag in the JCL. The SD is used to display "S" for single-sided print and "D" for double-sided print. The PL column displays "Y" to indicate the distribution list should be printed. Any other value in the column indicates the distribution list should not be printed. The special output service instructions are the first 18 characters of the supplemental printer control information at the front of each report. To view more details on a specific report, enter **X** in the column labeled Check One and press **ENTER**. Selecting this option will display the Report Directory Single List screen for the report marked with the "X".

<u>STEPS TO REACH QUERY BJM REPORT LIST</u>

1. At the NPPS Main Menu, select **3** - Application Administration.
2. At the Application Administrator Main Menu, select **2** - Maintenance Utilities.
3. At the Maintenance Utilities Menu, select **2** - Batch Job Maintenance.
4. At the Batch Job Maintenance Utilities Menu, select **2** - Report Directory.
5. At the BJM Report Directory, select **1** - Query BJM Report List.

5.2.1.2.1.1 BJM Report Directory Single List

```
* REVIEW THE REPORT ... THEN PRESS RETURN
                              NPPS BATCH JOB MAINTENANCE
     NPO2313                 REPORT DIRECTORY SINGLE LIST
     ------------------------------------------------------------------------------

        REPORT NO.  100          JOB NO. NA00100

        REPORT TITLE  100    T&A REPORTED HOURS

              HARDCOPY            SIMPLEX      PRINT     TOTAL     PRIVATE
                FORM                OR         RECIP     PRINT      LABEL
              NUMBER              DUPLEX       LIST      COPIES

                STD                  S           Y         1

     MESSAGE   DELIVER TO PC 105

       -------- PRINTER CONTROL FORMAT INSTRUCTIONS -----------------------------




     ------------------------------------------------------------------------------
      PF1= HELP           PF3= PREV SCREEN   PF5= MAIN MENU        PF12= END
```

Report Directory Single List

DESCRIPTION AND EXECUTION

The BJM Report Directory Single List template is used to display further details about a report listed on the Query BJM Report List template, including the following detail-level items.

Report Number	Report tag number in the JCL immediately following the Parm number (maximum of eight characters).
Report Title	Title assigned when report was created.
Job Number	Job number assigned when report was created (i.e., the job to which the report belongs).
Hardcopy Form Number	Blank means a special printer control record will not be created. Simplex or Duplex: **S** for single-sided and **D** for double-sided print.
Print Recip List	**Y** to include the distribution list at the start of the report.
Total Print Copies	Number of copies requested for this report.
Message	Special text to be printed on the distribution page.
Private	**Y** to have a Privacy Act message printed on the distribution page and private instruction included in the control record.
Printer Control	This data will be added to the printer control record.
Format Instructions	Generated from the form number and number of copies (e.g., FORMAT = FMT7 for picture format).

STEPS TO REACH BJM REPORT DIRECTORY SINGLE LIST

1. At the NPPS Main Menu, select **3** - Application Administration.
2. At the Application Administrator Main Menu, select **2** - Maintenance Utilities.
3. At the Maintenance Utilities Menu, select **2** - Batch Job Maintenance.
4. At the Batch Job Maintenance Utilities Menu, select **2** - Report Directory.
5. At the BJM Report Directory select **1** - Query Report List.
6. At the Query BJM Report List, mark the specific report to be displayed on the Single List screen.

5.2.1.2.1.2 Report Directory Recipient List

```
* REVIEW THE LIST. THEN PRESS RETURN
                                NPPS BATCH JOB MAINTENANCE
     NPO2314                 REPORT DIRECTORY RECIPIENT LIST
     ------------------------------------------------------------------------------

        REPORT NO.  100           JOB NO. NA00100
        REPORT TITLE  100    T&A REPORTED HOURS
         ------------------------   R E C I P I E N T   ------------------------
         NAME                ADDRESS           COPIES   ASSEMBLY INSTRUCTIONS
         TEST RUN           CSC BLD 5TH FLR     1      RB   PR









     ------------------------------------------------------------------------------
      PF1= HELP           PF3= PREV SCREEN    PF5= MAIN MENU       PF12= END
      PF7= BACKWARD       PF8= FORWARD
```

Query BJM Report Directory Recipient List

DESCRIPTION AND EXECUTION

The BJM Report Directory Recipient List template is used to display the recipient list for the report listed on the Query BJM Report List template and marked for further display of detailed information. The recipient list displays each recipient's name and address, number of copies, and particular assembly instructions.

<u>STEPS TO REACH BJM REPORT DIRECTORY RECIPIENT LIST</u>

1. At the NPPS Main Menu, select **3** - Application Administration.
2. At the Application Administrator Main Menu, select **2** - Maintenance Utilities.
3. At the Maintenance Utilities Menu, select **2** - Batch Job Maintenance.
4. At the Batch Job Maintenance Utilities Menu, select **2** - Report Directory.
5. At the BJM Report Directory, select **1** - Query BJM Report Directory.
6. At the Query BJM Report List, mark the specific report to be displayed on the Single List screen. At the BJM Report Directory Single List, press **ENTER**.

5.2.1.2.2 Update BJM Report List

```
 * ENTER FUNCTION, REPORT NO. & JOB NO.. THEN PRESS ENTER
                          NPPS BATCH JOB MAINTENANCE
NPO2319                     UPDATE BJM REPORT LIST
-------------------------------------------------------------------------------

   FUNCTION _   REPORT NO. ________  JOB NO. ________


   REPORT TITLE  ____________________________________________________________

               HARDCOPY            SIMPLEX      PRINT     TOTAL     PRIVATE
                 FORM                OR         RECIP     PRINT      LABEL
                NUMBER             DUPLEX       LIST      COPIES

               ______                 _           _         __        _

 MESSAGE   ________________________________________

  -------- PRINTER CONTROL FORMAT INSTRUCTIONS -----------------------------
  ______________________________________________________________________________


-------------------------------------------------------------------------------
FUNCTIONS:   A= ADD   C= CHANGE   D= DELETE
 PF1= HELP           PF3= PREV SCREEN   PF5= MAIN MENU        PF12= END
```

Update BJM Report List

DESCRIPTION AND EXECUTION

The BJM Report List template is used to add a new report to a batch job, change an existing report, or delete an existing report. First, enter the Function Code which corresponds to the required task: add (**A**), change (**C**), or delete (**D**) a report. Then, enter the Report Number and the Job Number and press **ENTER**.

An explanation of the other items to be added or updated is given below.

Job Number	Must not exceed seven characters and must be in the job directory.
Report Title	Title assigned when report was created.
Hardcopy Form Number	Blank means a special printer control record will not be created.
Simplex or Duplex	**S** for single-sided and **D** for double-sided print.
Print Recip List	**Y** to include the distribution list at the start of the report.
Total Print Copies	Number of copies requested for this report (Default = 1).
Message	Special text to be printed on the distribution page.
Private	**Y** to have a Privacy Act message printed on the distribution page and private instruction included in the control record.
Printer Control	This data will be added to the printer control record generated
Format Instructions	From the form number and number of copies (i.e., FORMAT = FMT7 for picture format).

STEPS TO REACH UPDATE BJM REPORT LIST

1. At the NPPS Main Menu, select **3** - Application Administration.
2. At the Application Administrator Menu, select **2** - Maintenance Utilities.
3. At the Maintenance Utilities Menu, select **2** - Batch Job Maintenance.
4. At the Batch Job Maintenance Utilities Menu, select **2** - Report Directory.
5. At the BJM Report Directory, select **2** - Update BJM Report List.

5.2.1.2.2.1 BJM Report Directory Recipient Update

```
* MARK THE LINE TO ADD/CHANGE WITH AN 'X'. THEN UPDATE
                                NPPS BATCH JOB MAINTENANCE
     NPO2320                REPORT DIRECTORY RECIPIENT UPDATE
     ------------------------------------------------------------------------------

     REPORT NO. 100    JOB NO. NA00100

     REPORT TITLE 100   T&A REPORTED HOURS

     MARK  NO  -------------------------R E C I P I E N T--------------------------
     CHNG      NAME                ADDRESS          COPIES  ASSEMBLY INSTRUCTIONS
      _    1   TEST RUN ______     CSC BLD 5TH FLR    1_    RB   PR__________________
      _        ________________    ________________   __    ___________________________
      _        ________________    ________________   __    ___________________________
      _        ________________    ________________   __    ___________________________
      _        ________________    ________________   __    ___________________________
      _        ________________    ________________   __    ___________________________
      _        ________________    ________________   __    ___________________________
      _        ________________    ________________   __    ___________________________
      _        ________________    ________________   __    ___________________________
      _        ________________    ________________   __    ___________________________

     ------------------------------------------------------------------------------
      PF1= HELP           PF3= PREV SCREEN   PF5= MAIN MENU        PF7= BACKWARD
      PF8= FORWARD        PF12= END
```

BJM Report Directory Recipient Update

DESCRIPTION AND EXECUTION

The BJM Report Directory Recipient Update template is used to enter the names and addresses of the report recipients as well as the number of copies and any assembly instructions for the reports having a recipient list. The line to be added or changed must be marked with **X**.

<u>STEPS TO REACH BJM REPORT DIRECTORY RECIPIENT UPDATE</u>

1. At the NPPS Main Menu, select **3** - Application Administration.
2. At the Application Administrator Menu, select **2** - Maintenance Utilities.
3. At the Maintenance Utilities Menu, select **2** - Batch Job Maintenance.
4. At the Batch Job Maintenance Utilities Menu, select **2** - Report Directory.
5. At the BJM Report Directory, select **2** - Update BJM Report List.
6. At the Update BJM Report List, type in the function requested, report number, and job number; then press **ENTER**.

5.2.1.2.3 View Report List By Job Number

```
 * VIEW THE LIST THEN USE PF3 TO QUIT
                          NPPS BATCH JOB MAINTENANCE
NPO2316                 VIEW REPORT LIST BY JOB NUMBER
-------------------------------------------------------------------------------

     JOB NUMBER          REPORT TITLE                REPORT NO  TOTAL COPIES
      NA00001        PAYROLL IMFH                   201              1
      NA00001        PAYROLL MATURE                 6140             1
      NA00003        T&A REPORT HOURS               100              1
      NA00003        OLD VS NEW NORMALS             101              1
      NA00003        ERROR REPORT                   201              1
      NA00003        PAYROLL REGISTER               202              1
      NA00003        T&A PAID HOURS                 204              1
      NA00003        LWOP T&A GENERATE              3005             1
      NA00003        BATCH T&A                      3120X            1
      NA00003        T&A IMPH DUMP                  5101             1
      NA00003        T&A IMPH BUMP BY PB            5101B            1
      NA00004        T&A REPORTED HOURS             101              1
      NA00004        OLD VS NEW NORMALS             101              1
-------------------------------------------------------------------------------
 PF1= HELP           PF3= PREV SCREEN   PF5= MAIN MENU        PF7= BACKWARD
 PF8= FORWARD        PF12= END
```

Batch Job Maintenance View Report List by Job Number

DESCRIPTION AND EXECUTION

The Batch Job Maintenance View Report List by Job Number template is used to list all the reports by job number. The report title, report number, and total number of copies requested are displayed for each report.

<u>STEPS TO REACH BATCH JOB MAINTENANCE VIEW REPORT LIST BY JOB NUMBER</u>

1. At the NPPS Main Menu, select **3** - Application Administration.
2. At the Application Administrator Menu, select **2** - Maintenance Utilities.
3. At the Maintenance Utilities Menu, select **2** - Batch Job Maintenance.
4. At the Batch Job Maintenance Utilities Menu, select **2** - Report Directory.
5. At the BJM Report Directory, select **3** - View Report List Job Number.

5.2.1.2.4 Update Distribution List

```
 * ENTER REPORT NO. AND JOB NO. THEN PRESS ENTER
                          NPPS BATCH JOB MAINTENANCE
NPO2315                REPORT DIRECTORY RECIPIENT UPDATE
-------------------------------------------------------------------------------
REPORT NO. ________             JOB NO. ________
REPORT TITLE

MARK  NO  -------------------------R E C I P I E N T--------------------------
CHNG      NAME                ADDRESS          COPIES  ASSEMBLY INSTRUCTIONS
 _        ________________    ________________   __    ___________________________
 _        ________________    ________________   __    ___________________________
 _        ________________    ________________   __    ___________________________
 _        ________________    ________________   __    ___________________________
 _        ________________    ________________   __    ___________________________
 _        ________________    ________________   __    ___________________________
 _        ________________    ________________   __    ___________________________
 _        ________________    ________________   __    ___________________________
 _        ________________    ________________   __    ___________________________
 _        ________________    ________________   __    ___________________________

-------------------------------------------------------------------------------
 PF1= HELP           PF5= MAIN MENU     PF7= BACKWARD         PF8= FORWARD
 PF12= END
```

Batch Job Maintenance Report Directory Recipient Update

DESCRIPTION AND EXECUTION

The Batch Job Maintenance Report Directory Recipient Update template is used to enter the names and addresses of the recipients as well as the number of copies and any assembly instructions for reports having a recipient list. First enter the Report Number and Job Number of the recipient list to be updated and press **ENTER**. Next, mark the line(s) to be added or changed with **X**.

<u>STEPS TO REACH BATCH JOB MAINTENANCE UPDATE DISTRIBUTION LIST</u>

1. At the NPPS Main Menu, select **3** - Application Administration.
2. At the Application Administrator Menu, select **2** - Maintenance Utilities.
3. At the Maintenance Utilities Menu, select **2** - Batch Job Maintenance.
4. At the Batch Job Maintenance Utilities Menu, select **2** - Report Directory.
5. At the BJM Report Directory, select **4** - Update Distribution List.

5.2.1.2.5 Global Name and/or Address Change

```
* ENTER NEW NAME, OLD NAME AND (OPTIONALLY) NEW ADDRESS
                                NPPS BATCH JOB MAINTENANCE
     NPO2317                GLOBAL NAME AND/OR ADDRESS CHANGE
     ------------------------------------------------------------------------------


                OLD RECIPIENT NAME     _______________

                NEW RECIPIENT NAME     _______________

                NEW ADDRESS            _______________





     ------------------------------------------------------------------------------
      PF1= HELP           PF3= PREV SCREEN   PF5= MAIN MENU         PF12= END
```

Batch Job Maintenance Global Name and/or Address Change

DESCRIPTION AND EXECUTION

The BJM Global Name and/or Address Change template is used to change the recipient names and/or address on all reports. If you want to update a name, enter the Old Recipient Name (i.e., the name as it currently appears on the recipient lists). Then enter the New Recipient Name. If the old name is not entered exactly as it currently appears, it will not be updated. You may also enter a New Address at this time.

To update the address without changing the name, enter the recipient name as the Old Recipient Name and enter the New Address. Leave the New Recipient Name field blank.

<u>STEPS TO REACH BATCH JOB MAINTENANCE GLOBAL NAME AND/OR ADDRESS CHANGE</u>

1. At the NPPS Main Menu, select **3** - Application Administration.
2. At the Application Administrator Menu, select **2** - Maintenance Utilities.
3. At the Maintenance Utilities Menu, select **2** - Batch Job Maintenance.
4. At the Batch Job Maintenance Utilities Menu, select **2** - Report Directory.

5.2.1.3 JCL Catalog Menu

```
                              NPPS BATCH JOB MAINTENANCE
NPO2322                            JCL CATALOG MENU
-------------------------------------------------------------------------------


      ENTER SELECTION AND PRESS RETURN _

                              1 - JCL JOB LIST
                              2 - QUERY JCL CATALOG
                              3 - UPDATE JCL CATALOG
                              4 - MAKE A COPY OF A JOB STREAM
                              5 - RESEQUENCE A JOB STREAM
                              6 - GLOBAL JCL CHANGE
                              7 - JCL SCAN




 -------------------------------------------------------------------------------
 PF1= HELP                  PF5= MAIN MENU                    PF12= END
```

Batch Job Maintenance JCL Catalog Menu

DESCRIPTION AND EXECUTION

The Batch Job Maintenance JCL Catalog Menu is used to select one of the seven functions available in JCL: (**1**) JCL Job List, (**2**) Query JCL Catalog, (**3**) Update JCL Catalog, (**4**) Make a Copy of a Job Stream, (**5**) Resequence a Job Stream, (**6**) Global JCL change, and (**7**) JCL Scan. When working in the JCL Catalog, it is important to remember that the JCL names must be the same as the job names.

If you enter an existing job number as the "new number", you will receive the message, THIS JOB ALREADY EXISTS. This is because NPPS will not delete existing JCL. If you want to overwrite a job, you must first delete the job, then perform the copy function.

<u>STEPS TO REACH BATCH JOB MAINTENANCE JCL CATALOG MENU</u>

1. At the NPPS Main Menu, select **3** - Application Administration.
2. At the Application Administrator Main Menu, select **2** - Maintenance Utilities.
3. At the Maintenance Utilities Menu, select **2** - Batch Job Maintenance.
4. At the Batch Job Maintenance Utilities Menu, select **3** - JCL Catalog.

5.2.1.3.1 JCL Job List

```
 * VIEW THE LIST THEN USE PF3 TO QUIT
                          NPPS BATCH JOB MAINTENANCE
NPO2324                     JCL JOB DIRECTORY LIST                          58
-------------------------------------------------------------------------------
           JOB NO.            JOB NO.            JOB NO.            JOB NO.

    1   - EXP0001      2   - NA00001      3   - NA00003      4   - NA00004
    5   - NA00005      6   - NA00006      7   - NA00009      8   - NA00013
    9   - NA00014      10  - NA00015      11  - NA00016      12  - NA00017
    13  - NA00018      14  - NA00100      15  - NA00101      16  - NA00102
    17  - NA00103      18  - NA00104      19  - NA00105      20  - NA00107
    21  - NA00200      22  - NA00201      23  - NA00202      24  - NA00203
    25  - NA00204      26  - NA00301      27  - NA00302      28  - NA00303
    29  - NA00304      30  - NA00305      31  - NA00306      32  - NA00307
    33  - NA00310      34  - NA00311      35  - NA00312      36  - NA00313
    37  - NA00400      38  - NA00401      39  - NA00402      40  - NA00403
    41  - NA00404      42  - NA00405      43  - NA00406      44  - NA00407
    45  - NA00408      46  - NA00409      47  - NA00410      48  - NA00411
    49  - NA00412      50  - NA00413      51  - NA00414      52  - NA00415

-------------------------------------------------------------------------------
 PF1= HELP           PF3= PREV SCREEN   PF5= MAIN MENU        PF7= BACKWARD
 PF8= FORWARD        PF12= END
```

Batch Job Maintenance JCL Job Directory List

DESCRIPTION AND EXECUTION

The Batch Job Maintenance JCL Job Directory List is used to display all job numbers having JCL records on the JCL Catalog.

<u>STEPS TO REACH BATCH JOB MAINTENANCE JCL JOB DIRECTORY LIST</u>

1. At the NPPS Main Menu, select **3** - Application Administration.
2. At the Application Administrator Main Menu, select **2** - Maintenance Utilities.
3. At the Maintenance Utilities Menu, select **2** - Batch Job Maintenance.
4. At the Batch Job Maintenance Utilities Menu, select **3** - JCL Catalog.
5. At the JCL Catalog Menu, select **1** - JCL Job List.

5.2.1.3.2 Query JCL Catalog

```
 * ENTER THE JOB ID THEN PRESS RETURN
NPO2326     NPPS BATCH JOB MAINTENANCE - QUERY JCL CATALOG
         JOB ID  ________
 T O O
 C C N ....5...10...15...20...25...30...35 ..40...45...50...55...60...65...70.2



--------------------------------------------------------------------------------
 PF1= HELP           PF3= PREV SCREEN   PF5= MAIN MENU        PF7= BACKWARD
 PF8= FORWARD        PF12= END
```

Batch Job Maintenance Query JCL Catalog

DESCRIPTION AND EXECUTION

The Batch Job Maintenance Query JCL Catalog template is used to query the JCL Catalog for the JCL of a specific job number. First, type in the job number (ID) and press **ENTER**. You will then view a list of the JCL for the job identified. You may scroll through the list to view all the JCL by using the **PF8** (Forward) and **PF7** (Backward) keys.

<u>STEPS TO REACH BATCH JOB MAINTENANCE QUERY JCL CATALOG</u>

1. At the NPPS Main Menu, select **3** - Application Administration.
2. At the Application Administrator Main Menu, select **2** - Maintenance Utilities.
3. At the Maintenance Utilities Menu, select **2** - Batch Job Maintenance.
4. At the Batch Job Maintenance Utilities Menu, select **3** - JCL Catalog.
5. At the JCL Catalog Menu, select **2** - Query JCL Catalog.

5.2.1.3.3 Update JCL Catalog

```
 * ENTER FUNCTION AND JOB NUMBER THEN PRESS ENTER
NPO2329        NPPS BATCH JOB MAINTENANCE - UPDATE JCL CATALOG
 FUNCTION _   JOB NUMBER _______    SEQ# START POINT(OPTIONAL) ____
 A  STMT  T  O  O   REPORT
 C  SEQ#  C  C  N   NUMBER
 T     ....5...10...15...20...25...30...35 ..40...45...50...55...60...65...70.2
 _  ____  _  _  _  ________
      ____________________________________________________________________________
 _  ____  _  _  _  ________
      ____________________________________________________________________________
 _  ____  _  _  _  ________
      ____________________________________________________________________________
 _  ____  _  _  _  ________
      ____________________________________________________________________________
 _  ____  _  _  _  ________
      ____________________________________________________________________________
 _  ____  _  _  _  ________
      ____________________________________________________________________________
-------------------------------------------------------------------------------
 FUNCTIONS: A= ADD   C= CHANGE   D= DELETE
 ACTIONS (ON CHANGE ONLY): A= ADD LINE   C= CHANGE LINE   D= DELETE LINE
 PF1= HELP           PF3= PREV SCREEN   PF5= MAIN MENU        PF7= BACKWARD
 PF8= FORWARD        PF12= END
```

Batch Job Maintenance Update JCL Catalog

DESCRIPTION AND EXECUTION

The Batch Job Maintenance Update JCL Catalog template is used to add (**A**), change (**C**), or delete (**D**) a record on the JCL Catalog. First enter the appropriate Function, Job number, and SEQ# Start Point (optional); then press **ENTER**. The start point is the line number where the display is to begin. Enter **9999** to move to the bottom of the JCL.

The Act field is used only when you are changing an existing record. This field allows you to add (**A**), change (**C**), or delete (**D**) one line at a time.

The Statement Sequence Number fields contain the numbers which represent the order of the lines of code as they occur in the record. The sequence numbers are generated automatically when you first add a new JCL record. You may move a line to another location in the JCL by changing this field. When you add a line, this field must contain the next highest number.

The JCL Type Code field is abbreviated "T C" and represents the type of statement. This field is required only when the JCL statement references one of the following three occurrences: the total number of copies (**C**), the printer destination for the hardcopy (**D**), or the report program's run statement (**R**). This code tells the BJM system to access the report directory and insert the number of copies and the printer destination into the JCL. The "T C" code of **N** identifies a user-id substitution.

The Output Class field is abbreviated "O C" and is required on JCL referring to a print file with "T C" or **D** or **C**. The BJM system must know whether it is tape (**T**) or hardcopy (**H**).

The Output Number field, abbreviated "O N", represents the print file number (e.g., **1**, **2**, **3**, etc.).

The Report Number field is required when the type code is **C**, **D**, or **R**. The report number must be the number of the report referred to by the JCL.

If it is necessary to use %*, enter it as **$*** and it will be converted to %*.

When you complete an action, press **ENTER**. You may also use the **PF7** and **PF8** keys. The **PF8** key saves the additions, updates, and deletions. The **PF7** saves updates and deletions, but not additions. Press the **ENTER** key after the **PF7** or **PF8** to confirm the update.

STEPS TO REACH BATCH JOB MAINTENANCE UPDATE JCL CATALOG

1. At the NPPS Main Menu, select **3** - Application Administration.
2. At the Application Administrator Main Menu, select **2** - Maintenance Utilities.
3. At the Maintenance Utilities Menu, select **2** - Batch Job Maintenance.
4. At the Batch Job Maintenance Utilities Menu, select **3** - JCL Catalog.
5. At the JCL Catalog Menu, select **3** - Update JCL Catalog.

5.2.1.3.4 Make a Copy of a Job Stream

```
                          NPPS BATCH JOB MAINTENANCE
NPO2331                  MAKE A COPY OF A JOB STREAM
--------------------------------------------------------------------------------

 THIS FUNCTION WILL MAKE A COPY OF AN EXISTING JCL STREAM TO A NEW JOB NUMBER.
 IF THE NEW NUMBER  ALREADY EXISTS IN THE CATALOG,  THE MODULE  WILL TERMINATE
 WITH AN ERROR MESSAGE.


   ENTER JOB NUMBER OF EXISTING JCL STREAM TO BE COPIED:    _______


   ENTER JOB NUMBER OF NEW JCL STREAM TO BE CREATED:        _______





--------------------------------------------------------------------------------
 PF1= HELP           PF3= PREV SCREEN   PF5= MAIN MENU        PF12= END
```

Batch Job Maintenance Make a Copy of a Job Stream

Description and Execution

The Batch Job Maintenance Make a Copy of a Job Stream template is used to copy an existing JCL job stream. First, enter the number of the existing JCL job stream and then enter the job number of the new JCL job stream. Finally, press the **ENTER** key to execute the copy.

If you enter an existing job number as the "new number", you will receive the message, "This job already exists." This is because NPPS will not delete existing JCL. If you want to overwrite a job, you must first delete the job and then perform the copy function.

<u>STEPS TO REACH BATCH JOB MAINTENANCE MAKE A COPY OF A JOB STREAM</u>

1. At the NPPS Main Menu, select **3** - Application Administration.
2. At the Application Administrator Main Menu, select **2** - Maintenance Utilities.
3. At the Maintenance Utilities Menu, select **2** - Batch Job Maintenance.
4. At the Batch Job Maintenance Utilities Menu, select **3** - JCL Catalog.
5. At the JCL Catalog Menu, select **4** - Make a Copy of a Job Stream.

5.2.1.3.5 Resequence a Job Stream

```
                          NPPS BATCH JOB MAINTENANCE
NPO2333                    RESEQUENCE A JOB STREAM
-------------------------------------------------------------------------------



        ENTER JOB NUMBER OF JCL STREAM TO BE RESEQUENCED:    ________



-------------------------------------------------------------------------------
 PF1= HELP           PF3= PREV SCREEN   PF5= MAIN MENU        PF12= END
```

Batch Job Maintenance Resequence a Job Stream

DESCRIPTION AND EXECUTION

The Batch Job Maintenance Resequence a Job Stream template is used to resequence an existing JCL stream. Enter the job number of the JCL job stream to be resequenced and press **ENTER**. This function resets the line increment to five, which allows more lines between JCL statements.

<u>STEPS TO REACH BATCH JOB MAINTENANCE RESEQUENCE A JOB STREAM</u>

1. At the NPPS Main Menu, select **3** - Application Administration.
2. At the Application Administrator Main Menu, select **2** - Maintenance Utilities.
3. At the Maintenance Utilities Menu, select **2** - Batch Job Maintenance.
4. At the Batch Job Maintenance Utilities Menu, select **3** - JCL Catalog.
5. At the JCL Catalog Menu, select **5** - Resequence a Job Stream.

5.2.1.3.6 Global JCL Change

```
                              NPPS BATCH JOB MAINTENANCE
NPO2351                            JCL GLOBAL CHANGE
-------------------------------------------------------------------------------

           Note: if you specify the log option you must have a
           133 byte dataset allocated to print file 2 (CMPRT02 )
           or else you must use NATURAL CONNECTION and download to
           a PC file.

           If executed in batch and you request the log option,
           a DD card must be supplied for CMPRT02 and it must
           point to a 133 character dataset.

              START JOBNAME:  _______    END JOBNAME:  _______

                             CHANGE TEXT FROM:
    ____________________________________________________________________________
                             CHANGE TEXT TO:
    ____________________________________________________________________________
        LOG CHANGES (Y/N): _        VERIFY CHANGES (ONLINE ONLY): _
-------------------------------------------------------------------------------
 PF1= HELP           PF3= PREV SCREEN   PF5= MAIN MENU        PF12= END
```

Batch Job Maintenance JCL Global Change (Page 1)

DESCRIPTION AND EXECUTION

The Batch Job Maintenance JCL Global Change template is used to change text throughout one or more jobs. Enter the starting and ending job names, the text to be changed and what to change the text to. You have the option of printing a log of the changes applied as well as viewing them online to verify the changes one line at a time.

If the Verify Changes option is chosen, a pop-up window will appear showing the line to be changed and what it will look like after the change. The change will be applied if you answer "Yes" to the Replace prompt.

```
                              NPPS BATCH JOB MAINTENANCE
NPO2351                            JCL GLOBAL CHANGE
-------------------------------------------------------------------------------

           Note: if you specify the log option you must have a
           133 byte dataset allocated to print file 2 (CMPRT02)


    JOB NA00003  SEQUENCE 315
    Change from
    //    VERS=TEST,ETID=XXXX0003,LIB=NPSTEST
    To
    //    VERS=PROD,ETID=XXXX0003,LIB=NPSTEST
    REPLACE (Y/N) _

                             CHANGE TEXT FROM:
    vers=test_____________________________________________________________
                             CHANGE TEXT TO:
    vers=prod_____________________________________________________________
        LOG CHANGES (Y/N): y        VERIFY CHANGES (ONLINE ONLY): y
-------------------------------------------------------------------------------
 PF1= HELP           PF3= PREV SCREEN   PF5= MAIN MENU        PF12= END
```

Batch Job Maintenance JCL Global Change (Page 2)

If the Log Changes option is chosen, all changes that are applied will be written to a log for future reference. Changes that were rejected during the online verification will not be written to the log. The output will look similar to the following report.

```
Page      1
    JOBNAME    SEQ STATEMENT
OLD NA00003    315 //    VERS=PROD,ETID=XXXX0003,LIB=NPSTEST
NEW                //    VERS=TEST,ETID=XXXX0003,LIB=NPSTEST
OLD NA00003    355 //    VERS=PROD,ETID=XXXX0003,LIB=NPSTEST
NEW                //    VERS=TEST,ETID=XXXX0003,LIB=NPSTEST
OLD NA00003    415 //    VERS=PROD,ETID=XXXX0003,LIB=NPSTEST
NEW                //    VERS=TEST,ETID=XXXX0003,LIB=NPSTEST
OLD NA00003    460 //    VERS=PROD,ETID=XXXX0003,LIB=NPSTEST
NEW                //    VERS=TEST,ETID=XXXX0003,LIB=NPSTEST
OLD NA00003    505 //    VERS=PROD,ETID=XXXX0003,LIB=NPSTEST
NEW                //    VERS=TEST,ETID=XXXX0003,LIB=NPSTEST
OLD NA00003    550 //    VERS=PROD,ETID=XXXX0003,LIB=NPSTEST
NEW                //    VERS=TEST,ETID=XXXX0003,LIB=NPSTEST
OLD NA00003    595 //    VERS=PROD,ETID=XXXX0003,LIB=NPSTEST
NEW                //    VERS=TEST,ETID=XXXX0003,LIB=NPSTEST
OLD NA00003    660 //    VERS=PROD,ETID=XXXX0003,LIB=NPSTEST
NEW                //    VERS=TEST,ETID=XXXX0003,LIB=NPSTEST
OLD NA00003   1275 //    VERS=PROD,ETID=XXXX0003,LIB=NPSTEST
NEW                //    VERS=TEST,ETID=XXXX0003,LIB=NPSTEST
```

Batch Job Maintenance JCL Global Change (Page 3)

STEPS TO REACH BATCH JOB MAINTENANCE JCL GLOBAL CHANGE

1. At the NPPS Main Menu, select **3** - Application Administration.
2. At the Application Administration Main Menu, select **2** - Maintenance Utilities.
3. At the Maintenance Utilities Menu, select **2** - Batch Job Maintenance.
4. At the Batch Job Maintenance Utilities Menu, select **3** - JCL Catalog.
5. At the JCL Catalog Menu, select **6** - Global JCL Change.

5.2.1.3.7 JCL Scan

```
                          NPPS BATCH JOB MAINTENANCE
NPO2325                        JCL SCAN
-------------------------------------------------------------------------------


               ENTER UP TO 10 TEXT STRINGS TO SEARCH FOR

             1  ________________________________________
             2  ________________________________________
             3  ________________________________________
             4  ________________________________________
             5  ________________________________________
             6  ________________________________________
             7  ________________________________________
             8  ________________________________________
             9  ________________________________________
            10  ________________________________________



-------------------------------------------------------------------------------
 PF1= HELP                  PF5= MAIN MENU                    PF12= END
```

Batch Job Maintenance JCL Scan

DESCRIPTION AND EXECUTION

The Batch Job Maintenance JCL Scan template is used to search the BJS JCL for a text string. Up to ten 40-byte text strings may be entered. The job name and JCL line will be displayed when a match is found.

5.2.1.4 Job Directory Menu

```
                              NPPS BATCH JOB MAINTENANCE
NPO2335                           JOB DIRECTORY MENU
-------------------------------------------------------------------------------


     ENTER SELECTION AND PRESS RETURN _

                  1 - QUERY JOB
                  2 - QUERY JOB DIRECTORY - BY JOB NUMBER
                  3 - QUERY JOB DIRECTORY - BY CATEGORY/SEQUENCE
                  4 - QUERY JOB DIRECTORY - BY FREQUENCY/JOB NUMBER
                  5 - UPDATE JOB DIRECTORY
                  6 - ADD DEFAULT PARAMETERS TO JOB DIRECTORY









-------------------------------------------------------------------------------
 PF1= HELP                  PF5= MAIN MENU                    PF12= END
```

Batch Job Maintenance Job Directory Menu

DESCRIPTION AND EXECUTION

The Batch Job Maintenance Job Directory Menu is used to select one of the six functions available in the Job Directory: (**1**) Query a Job, (**2**) Query a Job Directory - By Job Number, (**3**) Query a Job Directory - By Category/Sequence, (**4**) Query a Job Directory - By Frequency/Job Number, (**5**) Update the Job Directory, and (**6**) Add Default Parameters to the Job Directory.

<u>STEPS TO REACH JOB DIRECTORY</u>

1. At the NPPS Main Menu, select **3** - Application Administration.
2. At the Application Administrator Main Menu, select **2** - Maintenance Utilities.
3. At the Maintenance Utilities Menu, select **2** - Batch Job Maintenance.
4. At the Batch Job Maintenance Utilities Menu, select **4** - Job Directory.

5.2.1.4.1 Job Directory Query

```
 * REVIEW THE DATA THEN PRESS RETURN
                          NPPS BATCH JOB SCHEDULER
NPO2337                     JOB DIRECTORY QUERY
--------------------------------------------------------------------------------
JOB NUMBER:                              NA00003

RUN ORDER ------ CATEGORY CODE:          1           (1=PROCESS,2=REPORT,
                                                      3=USER INITIATED)
          ------ CATEGORY SEQUENCE:      30
          ------ CATEGORY TYPE:          1           (1=PAY,2=PER,3=OTHER)
JOB TITLE:                               TIME & ATTENDANCE UPDATE

AUTOMATIC SCHEDULE ---- RUN FREQUENCY:   B  (0=ON REQUEST, D=DAILY, W=WEEKLY,
                                             B=BIWEEKLY, M=MONTHLY, Q=QUARTERLY,
                                             A=ANNUALLY)

                   ---- NEXT RUN DATE:   02-02-94      (MM-DD-YY)

PARAMETER DATA REQUIRED:                 N             (Y OR N)

--------------------------------------------------------------------------------
 PF1= HELP           PF3= PREV SCREEN   PF5= MAIN MENU        PF12= END
```

Time and Attendance Update Job Query (Page 1)

DESCRIPTION AND EXECUTION

The Batch Job Maintenance Job Directory Query is used to review data for a specific job. Type in the number of the job to be queried and press **ENTER**. The information about the requested job will appear as follows. The first screen illustrates a query of the Time and Attendance Update Job Query.

Run Order Category Code	1. Process 2. Reports 3. User Initiated, such as SF 50 process.
Run Order Category Sequence	Four-digit number which controls the execution sequence; the lowest number runs first.
Category Type	1. Payroll 2. Personnel 3. Other
Automatic Schedule Run Frequency	Option for having the system automatically schedule jobs: 0 = On Request D = Daily W = Weekly B = Biweekly M = Monthly Q = Quarterly A = Annually.
Automatic Schedule Next Run Date	Date used by the auto-scheduler as its initial run date.
Parameter Data Required	Y will force the user to enter parameter values when the job is scheduled; default values will not be used.

```
 * REVIEW THE LIST...THEN PRESS RETURN
                          NPPS BATCH JOB MAINTENANCE
NPO2350                 QUERY JOB DIRECTORY - CONTINUED
--------------------------------------------------------------------------------


JOB NUMBER:  NA00003        OUTPUT TYPE: TAPE & SPECIAL


PRINT (OUTPUT) DEVICE ID: CSC01          INPUT TAPE REQUIRED(Y/ ):
PRINTER NODE:

                       PARAMETER    EDIT    MODULES
01  RESERVED    02  NAO9500      03  NAO9501     04  NAO9500     05  NAO9500
06  NAO9500     07               08              09              10
11              12               13              14              15
16              17               18              19              20
21              22               23              24              25
26              27               28              29              30
31              32               33              34              35
--------------------------------------------------------------------------------
 PF1= HELP           PF3= PREV SCREEN   PF5= MAIN MENU        PF12= END
```

Time and Attendance Update Job Query (Page 2)

The second job query screen displays the following fields.

Output Type	Tape, Immediate Hardcopy, Special Device, Tape and Special, and Tape and Hardcopy.
Printer (Output)	System recognized device name.
Parm Edit Modules	Programs which are executed when the job is scheduled to request input of data selection information from the user. The corresponding numbers must agree with values in the JCL. Module "01" is the first 200-byte element which contains the installation ID, title, and other BJM Control values. It is reserved so that it may contain these values. Module "01" may not be changed. Therefore, only modules 2-35 may contain parameter information.

```
                              NPPS BATCH JOB MAINTENANCE
 NPO2338                          EXECUTION  CALENDAR
 ------------------------------------------------------------------------------


      CA00003  IS AUTOMATICALLY SCHEDULED TO RUN ON THESE DATES --  BIWEEKLY


01/04/98__01/18/98__02/01/98__02/15/98__03/01/98__03/15/98__03/29/98__04/12/98

04/26/98__05/10/98__05/24/98__06/07/98__06/21/98__07/05/98__07/19/98__08/02/98

08/16/98__08/30/98__09/13/98__09/27/98__10/11/98__10/25/98__11/08/98__11/22/98

12/06/98__12/20/98__01/03/99__01/17/99__01/31/99__02/14/99__02/28/99__03/14/99

03/28/99__04/11/99__04/25/99__05/09/99__05/23/99__06/06/99__06/20/99__07/05/99



 ------------------------------------------------------------------------------
  PF1= HELP                 PF5= MAIN MENU                     PF12= END
```

Time and Attendance Update Job Query (Page 3)

The third job query screen displays the dates upon which the job is automatically scheduled to run; or, it may simply state the run cycle (i.e., biweekly, monthly, quarterly, or annually).

STEPS TO REACH BATCH JOB MAINTENANCE JOB DIRECTORY QUERY

1. At the NPPS Main Menu, select **3** - Application Administration.
2. At the Application Administrator Main Menu, select **2** - Maintenance Utilities.
3. At the Maintenance Utilities Menu, select **2** - Batch Job Maintenance.
4. At the Batch Job Maintenance Utilities Menu, select **4** - Job Directory.
5. At the Job Directory Menu, select **1** - Query Job.

5.2.1.4.2 Query Job Directory - By Job Number

```
 * TO VIEW A JOB - PLACE AN 'X' ON THAT LINE
                          NPPS BATCH JOB MAINTENANCE
NPO2339               QUERY JOB DIRECTORY - BY JOB NUMBER
-------------------------------------------------------------------------------
CHECK                                      CATEGORY   FREQ NEXT RUN DTE  EXTRNL
 ONE   JOB NO  JOB TITLE                 CDE SEQ# TPE CODE   MM DD YY     DATA
  _   AUTO     AUTO SCHED-DELETE          1  5     3    0    00 00 00      Y
  _   NA00001  PAYROLL BATCH MATURE       1  10    1    0    00 00 00      N
  _   NA00003  TIME & ATTENDANCE UPDATE   1  30    1    B    02 02 98      N
  _   NA00004  FINAL PAY REPORTS          1  40    1    B    01 01 99      N
  _   NA00005  PAYROLL PRODUCTS           1  50    1    B    01 01 99      N
  _   NA00006  PAY INITIALIZATION         1  60    1    B    01 01 99      N
  _   NA00009  NORMAL RECAL               1  70    1    B    01 01 99      N
  _   NA00013  PAY YEAR END               1  80    1    A    01 01 99      Y
  _   NA00014  LEAVE YEAR END             1  90    1    A    01 01 99      Y
  _   NA00015  FISCAL YEAR END            1  100   1    A    01 01 99      N
  _   NA00016  MESSAGE LOG                1  110   1    D    01 01 99      N
  _   NA00018  NEBA AGE UPDATE            1  130   1    0    00 00 00      N
-------------------------------------------------------------------------------
 PF1= HELP           PF3= PREV SCREEN   PF5= MAIN MENU        PF7= BACKWARD
 PF8= FORWARD        PF12= END
```

Batch Job Maintenance Query Job Directory - By Job Number

DESCRIPTION AND EXECUTION

The Batch Job Maintenance Query Job Directory - By Job Number template is used to query jobs listed by job number. The Job Directory List displays job number, job title, category code, sequence number and type, frequency code, next run date, and external data flag. The sequence number controls the execution order if more than one job is scheduled. The External Data column displays a "Y" or "N" value. The "Y" means parameter data default values cannot be used; "N" means parameter data may be needed, but available default values may be used. The type column identifies the job as Payroll (1), Personnel (2), or Other (3).

To view additional information about a particular job, enter **X** in the space provided to the left of the job number and press **ENTER**. The additional information displayed includes the output type, print output device ID, and parameter edit module numbers for the batch jobs that require online user input such as the desired sort sequence of name or SSN (refer to the following screen).

```
 * REVIEW THE LIST...THEN PRESS RETURN
                          NPPS BATCH JOB MAINTENANCE
NPO2350                 QUERY JOB DIRECTORY - CONTINUED
--------------------------------------------------------------------------------


JOB NUMBER:  NA00100        OUTPUT TYPE: HARDCOPY


PRINT (OUTPUT) DEVICE ID: CSC01          INPUT TAPE REQUIRED(Y/ ):
PRINTER NODE:

                       PARAMETER    EDIT    MODULES
01  RESERVED    02  NAO9500      03              04             05
06              07               08              09              10
11              12               13              14              15
16              17               18              19              20
21              22               23              24              25
26              27               28              29              30
31              32               33              34              35
--------------------------------------------------------------------------------
 PF1= HELP           PF3= PREV SCREEN   PF5= MAIN MENU        PF12= END
```

Query - By Job Number

STEPS TO REACH BATCH JOB MAINTENANCE QUERY JOB DIRECTORY - BY JOB NUMBER

1. At the NPPS Main Menu, select **3** - Application Administration.
2. At the Application Administrator Main Menu, select **2** - Maintenance Utilities.
3. At the Maintenance Utilities Menu, select **2** - Batch Job Maintenance.
4. At the Batch Job Maintenance Utilities Menu, select **4** - Job Directory.
5. At the Job Directory Menu, select **2** - Query Job Directory - By Job Number.

5.2.1.4.3 Query Job Directory - By Category/Sequence

```
 * TO VIEW A JOB - PLACE AN 'X' ON THAT LINE
                          NPPS BATCH JOB MAINTENANCE
NPO2342          QUERY JOB DIRECTORY - BY CATEGORY/SEQUENCE
-------------------------------------------------------------------------------
CHECK CATEGORY                                CATEGORY FREQ NEXT RUN DT EXTRNL
 ONE  CDE SEQ#   JOB NO   JOB TITLE              TYPE  CODE   MM DD YY   DATA
  _    1  5     AUTO     AUTO SCHED-DELETE        3     0    00 00 00      Y
  _    1  10    NA00001  PAYROLL BATCH MATURE     1     0    00 00 00      N
  _    1  30    NA00003  TIME & ATTENDANCE UPDATE 1     B    02 02 99      N
  _    1  40    NA00004  FINAL PAY REPORTS        1     B    01 01 98      N
  _    1  50    NA00005  PAYROLL PRODUCTS         1     B    01 01 98      N
  _    1  60    NA00006  PAY INITIALIZATION       1     B    01 01 98      N
  _    1  70    NA00009  NORMAL RECAL             1     B    01 01 98      N
  _    1  80    NA00013  PAY YEAR END             1     A    01 01 98      Y
  _    1  90    NA00014  LEAVE YEAR END           1     A    01 01 98      Y
  _    1  100   NA00015  FISCAL YEAR END          1     A    01 01 98      N
  _    1  110   NA00016  MESSAGE LOG              1     D    01 01 98      N
  _    1  130   NA00018  NEBA AGE UPDATE          1     0    00 00 00      N
-------------------------------------------------------------------------------
 PF1= HELP          PF3= PREV SCREEN   PF5= MAIN MENU        PF7= BACKWARD
 PF8= FORWARD       PF12= END
```

Batch Job Maintenance Query Job Directory
By Category/Sequence

DESCRIPTION AND EXECUTION

The Batch Job Maintenance Query Job Directory - By Category/Sequence template is used to query jobs listed by sequence within a category. The Job Directory List displays category code, sequence number, job number, job title, category type, frequency code, next run date, and external data flag. The sequence number controls the execution order if more than one job is scheduled. The External Data column displays a "Y" or "N" value. The **Y** means parameter data default values cannot be used; "N" means parameter data may come from default values if needed. The type column identifies the job as Payroll (1), Personnel (2), or Other (3).

To view additional information about a particular job, enter **X** in the space provided to the left of the job number and press **ENTER**. The additional information displayed includes the output type, print output device ID, and parameter edit module numbers for the batch jobs that require online user input such as the desired sort sequence of name or SSN (refer to the following screen).

```
 * REVIEW THE LIST...THEN PRESS RETURN
                          NPPS BATCH JOB MAINTENANCE
NPO2350                 QUERY JOB DIRECTORY - CONTINUED
--------------------------------------------------------------------------------


JOB NUMBER:  NA00100        OUTPUT TYPE: HARDCOPY


PRINT (OUTPUT) DEVICE ID: CSC01          INPUT TAPE REQUIRED(Y/ ):
PRINTER NODE:

                       PARAMETER    EDIT    MODULES
01  RESERVED    02  NAO9500      03              04              05
06              07               08              09              10
11              12               13              14              15
16              17               18              19              20
21              22               23              24              25
26              27               28              29              30
31              32               33              34              35
--------------------------------------------------------------------------------
 PF1= HELP           PF3= PREV SCREEN   PF5= MAIN MENU        PF12= END
```

Query - By Category/Sequence

STEPS TO REACH BATCH JOB MAINTENANCE QUERY JOB DIRECTORY - BY CATEGORY/SEQUENCE

1. At the NPPS Main Menu, select **3** - Application Administration.
2. At the Application Administrator Main Menu, select **2** - Maintenance Utilities.
3. At the Maintenance Utilities Menu, select **2** - Batch Job Maintenance.
4. At the Batch Job Maintenance Utilities Menu, select **4** - Job Directory.
5. At the Job Directory Menu, select **3** - Query Job Directory - By Category/Sequence.

5.2.1.4.4 Query Job Directory - By Frequency/Job Number

```
 * TO VIEW A JOB - PLACE AN 'X' ON THAT LINE
                        NPPS BATCH JOB MAINTENANCE
NPO2344         QUERY JOB DIRECTORY - BY FREQUENCY/JOB NUMBER
-------------------------------------------------------------------------------
CHECK FREQ                                        CATEGORY  NEXT RUN DTE  EXTRNL
 ONE  CODE  JOB NO  JOB TITLE                    CDE SEQ# TYPE  MM DD YY     DATA
  _     A  NA00013  PAY YEAR END                  1  80     1   01 01 98      Y
  _     A  NA00014  LEAVE YEAR END                1  90     1   01 01 98      Y
  _     A  NA00015  FISCAL YEAR END               1  100    1   01 01 98      N
  _     B  NA00003  TIME & ATTENDANCE UPDATE      1  30     1   02 02 99      N
  _     B  NA00004  FINAL PAY REPORTS             1  40     1   01 01 98      N
  _     B  NA00005  PAYROLL PRODUCTS              1  50     1   01 01 98      N
  _     B  NA00006  PAY INITIALIZATION            1  60     1   01 01 98      N
  _     B  NA00009  NORMAL RECAL                  1  70     1   01 01 98      N
  _     D  NA00016  MESSAGE LOG                   1  110    1   01 01 98      N
  _     D  NE00003  DAILY   REPORTS               1  380    2   01 01 98      N
  _     0  AUTO     AUTO SCHED-DELETE             1  5      3   00 00 00      Y
  _     0  NA00001  PAYROLL BATCH MATURE          1  10     1   00 00 00      N
-------------------------------------------------------------------------------
PF1= HELP           PF3= PREV SCREEN   PF5= MAIN MENU        PF7= BACKWARD
PF8= FORWARD        PF12=END
```

Batch Job Maintenance Query Job Directory - By Frequency/Job Number

DESCRIPTION AND EXECUTION

The Batch Job Maintenance Query Job Directory - By Frequency/Job Number template is used to query jobs listed by job number within a frequency. The Job Directory List displays frequency code, job number, job title, category code, sequence number, type, next run date, and external data flag. The sequence number controls the execution order if more than one job is scheduled. The External Data column displays a "Y" or "N" value. The "Y" means parameter data default values cannot be used; "N" means parameter data may be needed, but available default values may be used. The type column identifies the job as Payroll (1), Personnel (2), or Other (3).

To view additional information about a particular job, enter **X** in the space provided to the left of the job number and press **ENTER**. The additional information displayed includes the output type, print output device ID, and parameter edit module numbers for the batch jobs that require online user input such as the desired sort sequence of name or SSN (refer to the following screen).

```
 * REVIEW THE LIST...THEN PRESS RETURN
                          NPPS BATCH JOB MAINTENANCE
NPO2350                 QUERY JOB DIRECTORY - CONTINUED
--------------------------------------------------------------------------------


JOB NUMBER:  NA00100        OUTPUT TYPE: HARDCOPY


PRINT (OUTPUT) DEVICE ID: CSC01          INPUT TAPE REQUIRED(Y/ ):
PRINTER NODE:

                       PARAMETER    EDIT    MODULES
01  RESERVED    02  NAO9500      03              04              05
06              07               08              09              10
11              12               13              14              15
16              17               18              19              20
21              22               23              24              25
26              27               28              29              30
31              32               33              34              35
--------------------------------------------------------------------------------
 PF1= HELP           PF3= PREV SCREEN   PF5= MAIN MENU        PF12= END
```

Query - By Frequency/Job Number

STEPS TO REACH BATCH JOB MAINTENANCE QUERY JOB DIRECTORY - BY FREQUENCY/JOB NUMBER

1. At the NPPS Main Menu, select **3** - Application Administration.
2. At the Application Administrator Main Menu, select **2** - Maintenance Utilities.
3. At the Maintenance Utilities Menu, select **2** - Batch Job Maintenance.
4. At the Batch Job Maintenance Utilities Menu, select **4** - Job Directory.
5. At the Job Directory Menu, select **4** - Query Job Directory - By Frequency/Job Number.

5.2.1.4.5 Update Job Directory

```
                              NPPS BATCH JOB MAINTENANCE
NPO2347                          UPDATE JOB DIRECTORY
--------------------------------------------------------------------------------

FUNCTION: _    JOB NUMBER: _______

RUN ORDER ------ CATEGORY CODE:         _           (1=PROCESS,2=REPORT,
                                                     3=USER INITIATED)
          ------ CATEGORY SEQUENCE:     ____
          ------ CATEGORY TYPE:         _           (1=PAY,2=PER,3=OTHER)
JOB TITLE:                              _________________________

AUTOMATIC SCHEDULE ---- RUN FREQUENCY:  _  (0=ON REQUEST, D=DAILY, W=WEEKLY,
                                            B=BIWEEKLY, M=MONTHLY, Q=QUARTERLY,
                                            A=ANNUALLY)

                   ---- NEXT RUN DATE:  __ __ __    (MM DD YY)

PARAMETER DATA REQUIRED:                _           (Y OR N)
--------------------------------------------------------------------------------
FUNCTIONS:   A= ADD   C= CHANGE   D= DELETE
 PF1= HELP           PF3= PREV SCREEN   PF5= MAIN MENU        PF12= END
```

Batch Job Maintenance Update Job Directory (Page 1)

DESCRIPTION AND EXECUTION

The Batch Job Maintenance Update Job Directory template is used to add (A), change (C), or delete (D) a job directory record. Type in the Function code which represents the action to be completed and job number, then press **ENTER**.

To add a batch job to the Job Directory, first enter one of the following numbers as the Category Code: batch jobs (**1**), report batch jobs (**2**), or user initiated batch jobs (**3**). Then press **ENTER**. The next Category Sequence Number will be displayed. This number may be changed if needed but must remain unique. The Category Sequence Number controls the sequence of the jobs when they are executed. For a job to run before another job, the sequence number of the job to be run first must be lower than the job to be run second. You may type in the Job Title of your choice. The Automatic Schedule Run Frequency and Next Run Date are for batch jobs that can be scheduled automatically by the BJS system based on the entries in these two fields. Though this process does indeed appear "automatic" to the functional users of NPPS, it does require participation from Production Control. Each night a job is run which checks the execution date of all the jobs and selects the jobs with the current date. The jobs are then scheduled "automatically". The Parameter Required field should have a value of either "Y" or "N". The "Y" means that if parameter values are needed, they must be supplied when the job is scheduled (i.e., default values are not permitted); "N" means default data is permitted. The category type field identifies the job as Payroll (1), Personnel (2), or Other (3).

```
                          NPPS BATCH JOB MAINTENANCE
NPO2347                      UPDATE JOB DIRECTORY
-------------------------------------------------------------------------------


JOB NUMBER:                 OUTPUT TYPE: _
                            (H=HARDCOPY, T=TAPE, S=SPECIAL, B=S & T, K=H & T)

PRINT (OUTPUT) DEVICE ID: ________       INPUT TAPE REQUIRED(Y/ ): _
PRINTER NODE: ________

                       PARAMETER    EDIT    MODULES
01  RESERVED    02  ________     03  ________     04  ________     05  ________
06  ________    07  ________     08  ________     09  ________     10  ________
11  ________    12  ________     13  ________     14  ________     15  ________
16  ________    17  ________     18  ________     19  ________     20  ________
21  ________    22  ________     23  ________     24  ________     25  ________
26  ________    27  ________     28  ________     29  ________     30  ________
31  ________    32  ________     33  ________     34  ________     35  ________
-------------------------------------------------------------------------------
 PF1= HELP           PF3= PREV SCREEN   PF5= MAIN MENU        PF12= END
```

Batch Job Maintenance Update Job Directory (Page 2)

After you have filled in all the fields, press **ENTER** to view more job data input fields. The second screen prompts you for the Output Type, Printer Output Device ID, and the Parameter Edit Module Numbers. The module numbers are for only those batch jobs which require online user input such as the desired sort sequence of name or SSN. The module numbers must agree with the numbers in the JCL. Printer Node is optional.

The NPPS BJS system naming convention is that all job names for payroll begin with NA and all job names for personnel begin with NE (i.e., NA00000 or NE00000).

```
                          NPPS BATCH JOB MAINTENANCE
NPO2338                       EXECUTION CALENDAR
-------------------------------------------------------------------------------


     NA00100  IS AUTOMATICALLY SCHEDULED TO RUN ON THESE DATES --  BIWEEKLY


   /  /__    /  /__    /  /__    /  /__    /  /__    /  /__    /  /__    /  /__

   /  /__    /  /__    /  /__    /  /__    /  /__    /  /__    /  /__    /  /__

   /  /__    /  /__    /  /__    /  /__    /  /__    /  /__    /  /__    /  /__

   /  /__    /  /__    /  /__    /  /__    /  /__    /  /__    /  /__    /  /__

   /  /__    /  /__    /  /__    /  /__    /  /__    /  /__    /  /__    /  /__



-------------------------------------------------------------------------------
 PF1= HELP                 PF5= MAIN MENU                    PF12= END
```

Batch Job Maintenance Execution Calendar

The third screen is the BJM Execution Calendar. It displays the dates on which the batch job is automatically scheduled to run. This information is only available for jobs which are scheduled to run automatically. This is accomplished by filling in the Automatic Schedule field on the first screen of the Update Job Directory series. Following are the valid entries for this field: on request (**0**), daily (**D**), weekly (**W**), biweekly (**B**), monthly (**M**), quarterly (**Q**) and annually (**A**).

STEPS TO REACH BATCH JOB MAINTENANCE UPDATE JOB DIRECTORY

1. At the NPPS Main Menu, select **3** - Application Administration.
2. At the Application Administrator Main Menu, select **2** - Maintenance Utilities.
3. At the Maintenance Utilities Menu, select **2** - Batch Job Maintenance.
4. At the Batch Job Maintenance Utilities Menu, select **4** - Job Directory.
5. At the Job Directory Menu, select **5** - Update Job Directory.

5.2.1.4.6 Add Default Parameters to Job Directory

```
 * ENTER JOB NO. AND PARAMETER OCCURRENCE NO. THEN PRESS ENTER
                          NPPS BATCH JOB MAINTENANCE
NPO2336            ADD DEFAULT PARAMETERS TO JOB DIRECTORY
-------------------------------------------------------------------------------

  JOB NUMBER: ________   PARAMETER OCCURRENCE NUMBER: __

  POS 001-050 ....5...10....5...20....5...30....5...40....5...50

              ____________________________________________________

  POS 051-100 ....5...10....5...20....5...30....5...40....5...50

              ____________________________________________________

  POS 101-150 ....5...10....5...20....5...30....5...40....5...50

              ____________________________________________________

  POS 151-200 ....5...10....5...20....5...30....5...40....5...50
              ____________________________________________________
-------------------------------------------------------------------------------
 PF1= HELP          PF3= PREV SCREEN   PF5= MAIN MENU        PF12= END
```

Batch Job Maintenance Add Default Parameters to Job Directory

DESCRIPTION AND EXECUTION

The Batch Job Maintenance Add Default Parameters to Job Directory template is used to enter default parameters such as installation ID or a particular date to the job record.

To add default parameters, enter the Job Number and the occurrence of the parameter module in which it is used (2-14); this is called the Parameter Occurrence Number and it must agree with the value in the JCL. Then press **ENTER**. Input the default parameter data in the appropriate position in the 200-byte field. If you do not know the position, you must examine the program which reads the parameter. If the job does not use parameter data to execute, it is not necessary to enter any information in this section.

Module "01" is reserved for common parameters such as installation ID and title. Therefore, if "01" is entered along with the job number, a message appears which states that module "01" cannot be updated. The other occurrences (2-14) may provide default parameter data for the edit modules (2-14). For CPO executed jobs (those on the ‘NASA’ center menu), module “02” is reserved for the selected centers parameter. This occurrence is left blank as the centers to be used in the job will be selected from a pop-up menu at the time the job is scheduled.

STEPS TO REACH BATCH JOB MAINTENANCE ADD DEFAULT PARAMETERS TO JOB DIRECTORY

1. At the NPPS Main Menu, select **3** - Application Administration.
2. At the Application Administrator Main Menu, select **2** - Maintenance Utilities.
3. At the Maintenance Utilities Menu, select **2** - Batch Job Maintenance.
4. At the Batch Job Maintenance Utilities Menu, select **4** - Job Directory.
5. At the Job Directory Menu, select **6** - Add Default Parameters to Job Directory

Appendix A
APPLICABLE DOCUMENTS

APPLICABLE DOCUMENTS

The documents of the exact issue as shown in the subsections below form a part of this document to the extent described herein. In the event of a conflict between the documents referenced herein and the contents of this document, the contents of this document shall be considered a superseding requirement to the previous documents.

Reference Documents

This section lists all the reference and supporting documents which provide information pertinent to the content of the NPPS User and Operations Guide.

- AIM Program Plan
- AIM Program Technical Manager's Guidebook

Related Documents

This section lists all related documents which provide supporting information to the NPPS User and Operations Guide.

- AIM-NPPS-DID-07 - System Concept Document
- AIM-NPPS-DID-14 - Functional Requirements Document
- AIM-NPPS-DID-15 - System/Software Requirements Specification
- AIM-NPPS-DID-16 - System/Software Preliminary Design Specification
- AIM-NPPS-DID-17 - System/Software Detailed Design Specification
- AIM-NPPS-DID-20 - Training Plan and Procedures

THIS PAGE INTENTIONALLY LEFT BLANK.

Appendix B
ERROR MESSAGES/USER RESPONSE LIST

ERROR MESSAGES/USER RESPONSE LIST

This section lists all the error and informational messages which NPPS displays to communicate with the system user. These messages are not codes; they are self-explanatory phrases which appear in the context of a particular screen and function. The messages always appear at the top, left corner of the screen and are sometimes accompanied by a beep which signals the system user to view the upper-left corner of the screen and read the message.

NPPS provides three types of messages: (1) informational messages, (2) edit failure messages, and (3) severe discrepancy messages. Each type of message is preceded by a character or set of characters. The informational messages are preceded by a single asterisk (*). The edit failure messages are preceded by three asterisks (***). The severe discrepancy messages are preceded by three ampersands (@@@).

In addition, NPPS provides a fatal error information screen which displays when an error occurs that prohibits the user from processing a particular transaction.

Informational Messages

Informational messages report the processing of a transaction has been completed. A message of this type may also display the results of the processing (i.e., parameters). In these cases, the program notes the changes which the user needs to know. Following are examples of both types of informational messages.

* NORMAL RECALCULATION HAS BEEN DONE

This informational message informs the user NPPS automatically recalculated the normals due to a change in the employee's record affecting his/her net pay, such as the election of a new bond.

* FOUR HOURS OF SICK LEAVE CONVERTED TO LWOP

This informational message gives the processing result. In this example, NPPS has converted the reported sick leave hours to LWOP hours because the employee in question did not have enough leave accumulated for the four hours recorded on his/her time card.

Edit Failure Messages

Edit failure messages are always displayed in conjunction with the transaction edit process. These messages indicate the transactional processing has been terminated due to one of three reasons: (1) you entered invalid data, (2) you forgot to enter data in a mandatory field, or (3) you are not authorized to perform the action you have requested.

When you receive an edit failure message, you must interpret the message and correct the erroneous data or fill in the missing data. Then you may reapply the transaction, usually by pressing the **ENTER** key. Following are examples of the three types of edit failure messages.

*** DATE IS INVALID, FORM IS MMDDYY

This edit failure message informs the user the date entered is in the incorrect format. You must now re-enter the date in the format required (MMDDYY).

*** STATE CODE MUST BE ENTERED

This edit failure message informs the user the state code must be entered before your transaction can be processed. You must enter a valid state code.

*** USER NOT AUTHORIZED TO UPDATE PERSONNEL DATA

This edit failure message informs you that your security profile does not permit you to update personnel data. If you wish to perform this function, you should contact your Application Administrator so that your security profile can be changed.

Severe Discrepancy Messages

Severe discrepancy messages indicate NPPS is unable to locate some data which it must have in order to perform the requested transactional processing. When you receive this type of message, you should call your system administrator who must then enter the missing data before you can proceed with this transactional processing. Following is an example of a severe discrepancy message.

@@@ TAX TABLE NOT FOUND

This severe discrepancy message indicates the processing of the transaction terminated because the tax table is required, and NPPS was not able to locate the tax table during its attempt to process the transaction. The tax table must be entered into NPPS before this transaction can be processed.

Fatal Error Information Screen

If you receive a fatal error information screen (see Figure B-1) while using NPPS, the preferred procedure is to record all the information displayed on the screen and give it to your Installation Application Administrator. The Administrator should then notify the Help Desk of the fatal error.

```
10:44:05.7            NASA PERSONNEL AND PAYROLL SYSTEM            98-06-07
  NPO9010              ***** FATAL ERROR INFORMATION  *****
                CENTER ID:9999    NPPS VERSION:99.99.99  TABLE RELEASE 9.99


              DAM1090    DEBBIE


              An error has occurred in the NASA Personnel and
              Payroll System while processing your transaction.

              Please write down or print the following

                       Date-Time :  89-06-07  10:44:05.7
                       Procedure :  NPS2GLOB
                       Statement :  200
                       Error code:  933
                       Error type:  Natural
                       System    :  Payroll

              Press any 'PF-KEY' or 'ENTER' key to exit
              Please call HELP DESK at (256)  544-6673
```

Figure B-1 Fatal Error Information

NPPS MER Messages

MESSAGE #	ERROR / INFORMATIONAL MESSAGE
1001	* PAYBLOCK XX SSN# XXXXXXXXXXX XXXXXXXX IN MASTER EMPLOYEE RECORD
1002	* NORMAL RECALCULATION HAS BEEN DONE
1003	* NEW NORM NET RESULT NEGATIVE, NORMAL NET SET TO ZERO
1004	* CENTER NET PAY NEGATIVE, NET PAY SET TO ZERO
1005	* FIN-YTD CONTROL RECORD UPDATED
1006	* SPECIFY PAYBLOCK AND/OR SSN
1007	*** PAYBLOCK MUST BE NUMERIC AND 01 - 09
1008	*** EMPLOYEE # MUST BE NUMERIC
1009	*** UPDATE NOT ALLOWED, CYCLE = 3
1010	*** USER NOT AUTHORIZED TO PERFORM THIS FUNCTION
1011	*** RECORD CANNOT BE FOUND
1012	*** RECORD ALREADY EXISTS
1013	*** DATE IS INVALID, FORM IS MMDDYY
1014	*** INVALID FUNCTION CODE
1015	*** DATA BASE UPDATE UNSUCCESSFUL - CALL HELP DESK
1016	*** NAME CANNOT BE BLANK
1017	*** ADDRESS MUST BE ENTERED
1018	*** STATE MUST BE ALPHA AND PROPER U.S. ABBREVIATION
1019	*** ZIP MUST BE NUMERIC
1020	*** LIFE TABLE RECORD NOT FOUND
1021	*** EIC TABLE RECORD NOT FOUND
1022	*** RETIRE TABLE RECORD NOT FOUND
1023	*** LIMITS TABLE RECORD NOT FOUND
1024	*** PREM TABLE RECORD NOT FOUND
1025	*** NEBA TABLE RECORD NOT FOUND
1026	*** BOND TABLE RECORD NOT FOUND
1027	*** PAYBLOCK NORMALS RECORD NOT FOUND
1028	*** CENTER NORMALS RECORD NOT FOUND
1029	*** LEAVE TABLE RECORD NOT FOUND
1030	*** RATE TABLE RECORD NOT FOUND
1031	*** SIGN MUST BE "+" OR "-"

MESSAGE #	ERROR / INFORMATIONAL MESSAGE
1032	*** UNSUCCESSFUL FIN-YTD CONTROL RECORD UPDATE
1033	*** FIN-YTD CONTROL RECORD NOT FOUND
1034	*** ONE OR MORE HOUR VALUES NOT IN HALF HOUR INCREMENTS
1035	*** PART TIME REMAIN MUST BE IN WHOLE OR HALF HOURS
1036	*** INVALID ROUTING#
1037	*** YTD NEGATIVE ADJUSTMENT GREATER CURRENT YTD FIELD
1038	*** YTD ADJUSTMENT RECORD NOT FOUND
1039	*** CENTER/SSN COMBINATION CANNOT BE FOUND
1040	*** INVALID SSN
1041	*** USER NOT AUTHORIZED TO UPDATE PERSONAL DATA
1042	*** USER NOT AUTHORIZED PERMISSION TO PAYBLOCK
1043	* BACKOUT PROCESSING HAS BEEN INITIATED
1044	*** INVALID T&A PAYBLOCK
1045	*** INVALID T&A SHIFT
1046	*** INVALID T&A ORGANIZATION
1047	*** TRAVEL AND FICA-RETIR DEDUCTION NOT LEGAL IN SAME PAY PERIOD
1048	*** CANNOT ADJUST EIC AMOUNT FOR A NON-PARTICIPATING EMPLOYEE
1049	*** LUMP LEAVE DEDUCTION NEGATES NET PAY AMOUNT: NOT APPLIED
1050	*** MULTI DEDUCTION NEGATES NET PAY AMOUNT: NOT APPLIED
1051	*** TRAVEL ADVANCE NEGATES NET PAY AMOUNT: NOT APPLIED
1052	*** FICA RET DEDUCTION NEGATES NET AMOUNT: NOT APPLIED
1053	*** US INDEBTEDNESS DEDUCTION NEGATES NET AMOUNT: NOT APPLIED
1054	*** BANKRUPT DEDUCTION NEGATES NET AMOUNT: NOT APPLIED
1055	*** OTHER DEDUCTIONS NEGATES NET AMOUNT: NOT APPLIED
1056	*** EIGHTY-HOURS LWOP MUST NOT BE GREATER THAN 80
1057	* PRIOR YEAR LEAVE BALANCE IS OVER LIMIT
1058	* CEILING IS GREATER THAN LIMIT
1059	*** SELECTION ENTERED IS INVALID, TRY AGAIN
1060	* LEAVE CATEGORY INVALID FOR THIS SERVICE CODE
1061	*** INVALID REASON CODE (ENTER H, S, N, OR M)
1062	*** SIGNS FOR O.T. HOURS AND O.T. DOLLARS MUST NOT BE DIFFERENT
1063	*** EIC ADJUSTMENT NEGATES CURRENT PP EIC AMOUNT
1064	*** BASE ADJUSTMENT NEGATES NET PAY AMOUNT: NOT APPLIED
1065	*** GROSS ADJUSTMENT NEGATES NET PAY AMOUNT: NOT APPLIED
1066	*** NET ADJUSTMENT NEGATES NET PAY AMOUNT: NOT APPLIED
1067	*** O.T. ADJUSTMENT NEGATES NET PAY AMOUNT: NOT APPLIED
1068	*** NEITHER NET-VIA-EFT OR CHECK-ADDR ENTERED, OR BOTH WERE
1069	*** ACCT-TYPE MUST BE "C" OR "S"
1070	*** ROUTING# MUST BE NUMERIC
1071	*** EIC AMOUNT EXCEEDS TABLE LIMIT
1072	* FICA YTD EARNINGS/DEDUCTIONS SHOULD CORRESPOND
1073	* HIT YTD EARNINGS/DEDUCTIONS SHOULD CORRESPOND
1074	*** RETIRE FICA/HIT IS GREATER THAN MAX SALARY
1075	*** OPTIONAL AMOUNT MUST BE IN 5 DOLLAR INCREMENTS
1076	*** FEDERAL TAX MARITAL STATUS MUST BE "M" OR "S"
1077	*** EIC CODE MUST BE "0", "1", OR "2"
1078	*** STATE TAX MARITAL STATUS MUST BE "M", "S", OR "H"
1079	*** TAX TABLE RECORD NOT FOUND
1080	*** STATE CHANGE DISALLOWED, FORMER STATES FULL
1081	*** ENTRY MUST BE ALL BLANK OR ALL FULL
1082	*** OPEN OR TOT BALANCE SIGN NOT "+" OR "-"
1083	*** OPEN COMP BALANCE MAY NOT BE NEGATIVE
1084	*** STATUS MUST BE ("A" OR "J") OR ("B" OR "K")
1085	*** ENTRY MUST BE ALL BLANK OR ALL FULL
1086	*** TWO ACCOUNTS FOR SAME ROUTING NUMBER ILLEGAL
1087	* FICA YTD/QTD EARN/DEDUCTION SHOULD CORRESPOND
1088	* HIT YTD/QTD EARN/DEDUCTION SHOULD CORRESPOND
1089	* YTD AND CUM ADJUSTMENTS NOT EQUAL
1090	* CSRS YTD ADJ WITHOUT CSRS CUM ADJ - BALANCE WILL BE UNAFFECTED
1091	* CSRS CUM ADJ WITHOUT CSRS YTD ADJ - BALANCE WILL BE UPDATED

MESSAGE #	ERROR / INFORMATIONAL MESSAGE
1092	*** YTD FICA/HIT DEDUCTION IS GREATER THAN TABLE LIMIT
1093	*** ACCT X DATE IS INVALID, FORM IS MMDDYY
1094	*** TOTAL USED NOT EQUAL TO SUM OF CUMULATIVE USED
1095	*** CFC ORGANIZATION CODE MUST BE BLANK OR MATCH CFC TABLE
1096	*** CFC DEDUCTION AMOUNT MUST NOT BE LESS THAN 50 CENTS
1097	*** CFC DEDUCTION MUST BE ENTERED IF CFC ORGANIZATION IS ENTERED
1098	*** CFC ORGANIZATION REQUIRED WHEN CFC AMOUNT > 0
1099	*** MIL DEPOSIT DEDUCTION AMOUNT > REQ MIL DEPOSIT DEDUCTION
1100	*** INTEREST TABLE RECORD NOT FOUND
1101	*** MIL DEPOSIT ALREADY PAID IN FULL
1102	*** MIL DEPOSIT DEDUCTION EXCEEDS BALANCE DUE
1103	*** BOTH MIL DEPOSIT DEDUCTION AND MIL DEPOSIT CASH NOT ALLOWED
1104	*** REQ MIL DEPOSIT CANNOT BE ZERO WHEN CUM MIL DEPOSIT > 0
1105	*** YTD TRAUMATIC IS OVER LIMIT
1106	*** YTD MILITARY IS OVER LIMIT
1107	*** RETIRE FICA/HIT IS GREATER THAN MAXIMUM SALARY
1108	*** YTD FICA/HIT DEDUCTION IS GREATER THAN TABLE LIMIT
1109	*** HIT AND FICA DEDUCTION NOT ALLOWED
1110	*** BOND CODE MUST BE (A OR J)/(B OR K)/(C OR L)
1111	*** DEDUCTION MUST BE AT LEAST $3.75
1112	*** CO-OWNER/BENEFICIARY CODE MUST BE "POD" OR "OR" OR BLANK
1113	*** ALL OWNER DATA REQUIRED EXCEPT NAME
1114	*** BALANCE MUST BE ZERO ON NEW BOND ENTRY
1115	*** OR/POD NAME REQUIRED WHEN OR/POD CODE ENTERED
1116	*** DENOMINATION NOT IN BOND TABLE
1117	*** DEDUCTION LARGER THAN BOND PRICE
1118	*** BOND MAY NOT BE REACTIVATED UNTIL AFTER INITIALIZATION
1119	* NEBA AGE > 69, OPTIONAL INS NOT COMPUTED
1120	*** NEBA BASIC MUST BE Y OR BLANK
1121	*** NEBA SPOUSE MUST BE Y OR BLANK
1122	*** NEBA OPTIONAL UNITS MUST BE 1 - 6 OR BLANK
1123	*** SMOKER MUST BE S OR N WHEN OPTION IS 1 - 6
1124	*** BIRTH DATE REQUIRED IN PERSONNEL TO COMPUTE NEBA
1125	*** AGE NOT LOCATED IN NEBA TABLE
1126	*** NEBA NOT ALLOWED FOR SERVICE CODE "C" EMPLOYEE
1127	* LUMP SUM LEAVE HOURS NOT EQUAL ANNUAL LEAVE BALANCE
1128	*** DAYS YTD-USED SHOULD BE 0-130
1129	*** DAYS YTD-USED NOT ALLOWED WHEN DAYS LIMIT IS 0
1130	*** DOLLARS YTD-USED NOT ALLOWED WHEN DOLLARS LIMIT IS 0
1131	*** PENDING OR REACTIVATE FLAG SHOULD BE "P", "R" OR " "
1132	*** EMPLOYEE CAN ONLY BE TERMINATED THRU THE PERSONNEL SYSTEM
1133	*** EMPLOYEE ALREADY REACTIVATED
1134	*** ONLY ONE LIMIT GROUP ALLOWED; "DAYS", "DOLLARS", OR "HOURS"
1135	*** NON-ACTIVE EMPLOYEE STATUS DISALLOWS PENDING TERM
1136	*** HOURS YTD-USED NOT ALLOWED WHEN HOURS LIMIT IS 0
1137	*** ADJUSTMENTS NEGATES NET AMOUNT: NOT APPLIED
1138	*** ACTIVE EMPLOYEE NOT ALLOWED TO BE REACTIVATED
1139	*** EMPLOYEE RECORD HAS BEEN DELETED, CONTACT HELP DESK
1140	*** PAYBLOCK OR EMPLOYEE RECORD IS NOT ON FILE
1141	*** PAYBLOCK IS INVALID (NOT NUMERIC AND 01 - 10)
1142	*** SSN IS INVALID (NOT BLANK OR NUMERIC)
1143	*** CA. ADDITIONAL EXEMP VALID FOR STATE CODE "CA" ONLY
1144	*** MER RECORD NOT FOUND
1145	*** PERSONNEL RECORD NOT FOUND
1146	*** PLEASE SELECT AN OPTION
1147	*** YTD RECORD NOT FOUND
1148	*** SALARY TABLE RECORD NOT FOUND
1149	*** REG RECORD NOT FOUND
1150	*** MIL DEPOSIT DEDUCTION MUST BE ENTERED WHEN REQ MIL DEPOSIT-AMOUNT
1151	*** ALL FIELDS MUST BE ZEROED AND TRANS REENTERED

MESSAGE #	ERROR / INFORMATIONAL MESSAGE
1152	*** UNION CODE NOT FOUND IN UNION TABLE
1153	*** ADJUSTMENT EXCEEDS EIC TABLE LIMIT
1154	*** ROUTING#/BRANCH# KEY NOT FOUND AND MUST BE IN FINANCIAL TABLE
1155	*** STATE CODE MUST BE ENTERED
1156	*** GB YTD AND CUM ADJUSTMENTS MUST BE EQUAL
1157	*** GM YTD AND CUM ADJUSTMENTS MUST BE EQUAL
1158	*** TSP-RECNO MUST BE "21" OR "41"
1159	*** NON-PAY INDICATOR MUST BE "X" OR BLANK
1162	*** NON-PAY INDICATOR MUST BE BLANK
1163	*** INVALID TSP-RCDNO OR NON-PAY
1164	* TSP-ADJ RECORD UPDATED
1165	*** AT LEAST ONE TYPE MUST BE ENTERED
1166	*** INVALID TYPE/HOURS COMBINATION ENTERED
1167	*** STATUS MUST BE ("C" OR "J") OR ("D" OR "K")
1168	*** TSP LOANS CANNOT HAVE SAME ACCOUNT NUMBER
1169	* CSRS EMPLOYEE WITH A FERS UPDATE
1170	* FERS EMPLOYEE WITH A CSRS UPDATE
1171	* FERS YTD ADJ WITHOUT FERS CUM ADJ - BALANCE WILL BE UNAFFECTED
1172	* FERS CUM ADJ WITHOUT FERS YTD ADJ - BALANCE WILL BE UPDATED
1173	* RECIPIENT RECORD IS UPDSTED FOR EVERY 25 DONOR RECORDS PROCESSED
1174	* NIGHT DIFF ADJUSTMENT NOT ALLOWED FOR FEDERAL WAGE EMPLOYEES
1175	*** NET-VIA-EFT, CHECK-ADDR OR OFFICE CHECK MUST BE ENTERED
1176	*** ENTER EITHER NET-VIA-EFT OR OFFICE CHECK, NOT BOTH
1177	*** ENTER EITHER CHECK-ADDR OR OFFICE CHECK, NOT BOTH
1178	*** ZIP MUST BE NUMBERS, ENTERED IN FORMAT NNNNN-NNNN OR NNNNN ONLY

NPPS T&A Messages

MESSAGE #	ERROR / INFORMATIONAL MESSAGE
3001	*** SPLIT SHIFT ONLY VALID FOR WAGE BOARD EMPLOYEES
3002	*** T & A BASE HOURS NOT NUMERIC
3003	*** T & A OVERTIME HOURS NOT NUMERIC
3004	*** T & A NIGHT DIFFERENTIAL NOT NUMERIC
3005	*** T & A COMP TIME EARNED NOT NUMERIC
3006	*** T & A HOLIDAY WORKED HOURS NOT NUMERIC
3007	*** T & A SUNDAY DIFFERENTIAL HOURS NOT NUMERIC
3008	*** T & A HAZARDOUS DUTY HOURS NOT NUMERIC
3009	*** T & A ANNUAL LEAVE USED HOURS NOT NUMERIC
3010	*** T & A SICK LEAVE USED HOURS NOT NUMERIC
3011	*** T & A COMP TIME USED HOURS NOT NUMERIC
3012	*** T & A LWOP HOURS NOT NUMERIC
3013	*** T & A SUSPENSION HOURS NOT NUMERIC
3014	*** T & A AWOL HOURS NOT NMUMERIC
3015	*** T & A HOLIDAY HOURS NOT NUMERIC
3016	*** T & A RESTORED LEAVE HOURS NOT NUMERIC
3017	*** T & A OTHER LEAVE HOURS NOT NUMERIC
3018	*** NIGHT DIFFERENTIAL REQUIRED WITH 2ND SHIFT
3019	*** T & A ILLEGAL, FOR NON-SEVERANCE INACTIVE EMPLOYEE
3020	*** DATE IS INVALID, FORM MMDDYY
3021	@@@ PAY RECORD NOT FOUND
3022	*** INVALID T & A SHIFT CODE. (1,2,3)
3023	*** REG HOURS MUST NOT BE GREATER THAN 40 PER WEEK
3024	*** ANNUAL LEAVE HOURS MUST NOT BE GREATER THAN 40
3025	*** SICK LEAVE HOURS MUST NOT BE GREATER THAN 40
3026	*** HOLIDAY LEAVE HOURS MUST BE IN 8 HOUR INCREMENTS
3027	*** LWOP HOURS MUST NOT BE GREATER THAN 40, EMPLOYEE NOT ELIGIBLE
3028	*** AWOL HOURS MUST NOT BE GREATER THAN 40, EMPLOYEE NOT ELIGIBLE
3029	*** SUSPENSION HOURS MUST NOT BE GREATER THAN 40, EMPLOYEE NOT ELIGIBLE
3030	*** NIGHT DIFFERENTIAL HOURS MUST BE <= BASE + PREMIUM + PAID LEAVE

MESSAGE #	ERROR / INFORMATIONAL MESSAGE
3031	@@@ LIMIT TABLE NOT FOUND
3032	*** PREMIUM HOURS NOT ALLOWED FOR THIS EMPLOYEE
3033	*** NIGHT HOURS NOT ALLOWED FOR THIS EMPLOYEE
3035	*** SUNDAY DIFFERENTIAL HOURS MUST NOT BE GREATER THAN 16
3036	*** HAZARDOUS HOURS MUST BE <= BASE + PREMIUM + PAID LEAVE
3037	*** THIRD SHIFT LEGAL ONLY FOR WAGE BOARD EMPLOYEES
3038	*** EMPLOYEE NOT ELIGIBLE FOR ANNUAL LEAVE
3039	*** EMPLOYEE NOT ELIGIBLE FOR SICK LEAVE
3040	*** EMPLOYEE NOT ELIGIBLE FOR COMP TIME
3041	*** EMPLOYEE NOT ELIGIBLE FOR PAID COMP TIME
3043	*** EMPLOYEE NOT ELIGIBLE FOR RESTORED LEAVE
3044	*** EMPLOYEE NOT ELIGIBLE FOR MILITARY LEAVE
3045	*** EMPLOYEE NOT ELIGIBLE FOR ADMINISTRATIVE LEAVE
3046	*** EMPLOYEE NOT ELIGIBLE FOR JURY DUTY LEAVE
3047	*** EMPLOYEE NOT ELIGIBLE FOR GRADUATE STUDY LEAVE
3048	*** EMPLOYEE NOT ELIGIBLE FOR EXCUSED LEAVE
3049	*** EMPLOYEE HAS NO INJURY LIMIT DATE, COP HOURS ILLEGAL
3050	*** EMPLOYEE NOT ELIGIBLE FOR RELIGIOUS LEAVE
3051	*** UNSUCCESSFUL UPDATE, NOTIFY YOUR SUPERVISOR
3052	*** LEAVE BALANCE FOR LEAVE EARN CATEGORY ZERO (0), INSUFFICIENT
3053	*** ERROR IN ADDING HUNDRED RECORD, NOTIFY YOUR SUPERVISOR.
3054	*** LOGFILE IS FULL. NOTIFY YOUR SUPERVISOR
3055	* MIL LV DAYS FOR PART TIME EMPL MUST BE UPDATED MANUALLY ON OTHLV SCREEN
3056	* MILITARY LEAVE FOR NON-WORK DAYS MUST BE UPDATED MANUALLY ON OTHLV SCREEN
3057	*** HOME LEAVE ENTERED IS GREATER THAN BALANCE
3058	*** BASE HOURS + PAID LEAVE HOURS + NON PAID LEAVE HOURS NOT EQUAL 40
3059	*** BASE + PAID LEAVE + NON PAID LEAVE + O.T. FOR AN IRREGULAR TOUR < 40
3060	*** EMPLOYEE REACHED HOUR PAY LIMIT IN A PRIOR PAY PERIOD
3061	*** EMPLOYEE REACHED DOLLAR PAY LIMIT IN A PRIOR PAY PERIOD
3062	*** T & A PAYBLOCK RECORD NOT FOUND
3063	*** T & A CENTER RECORD NOT FOUND
3064	* DOLLAR LIMIT EXCEEDED THIS PP: DOLLARS CUT FROM EARNINGS
3065	*** INVALID GRADE/PAY RATE TABLE NOT FOUND
3066	* DAY LIMIT EXCEEDED THIS PP: DAYS NOT INCLUDED IN EARNINGS
3067	*** SPLIT SHIFT CARDS NOT IN PROPER ORDER
3068	* DATE LIMIT REACHED THIS PP: = CURRENT GROSS PAY
3069	* OVER STAT LIMIT, PAY-CUT IS
3070	* HOUR LIMIT REACHED THIS PP: HOURS NOT INCLUDED IN EARNINGS
3071	*** EMPLOYEE REACHED DAY LIMIT IN PRIOR PAY PERIOD
3072	*** EMPLOYEE EXCEEDED DATE LIMIT IN PRIOR PAY PERIOD
3073	* FICA DEDUCTION LIMIT REACHED FOR THIS EMPLOYEE
3074	@@@ REGISTER RECORD NOT FOUND
3075	* INSUFFICIENT NET AMOUNT, NO ALLOTMENT DEDUCTION
3076	* INSUFFICIENT NET AMOUNT, NO CFC DEDUCTION
3077	@@@ BOND TABLE NOT FOUND
3078	*** INVALID BOND DENOMINATION
3079	@@@ CONTROL RECORD NOT FOUND
3080	@@@ EIC TABLE NOT FOUND
3081	* CURRENT EIC AMOUNT IS NEGATIVE
3082	@@@ RETIREMENT TABLE NOT FOUND
3083	@@@ TAX TABLE NOT FOUND
3084	*** HEALTH CODE MATCH NOT FOUND IN TABLE
3085	*** INVALID STATE CODE
3086	* INSUFFICIENT NET AMOUNT, NO UNION DEDUCTION
3087	* INSUFFICIENT NET AMOUNT, NO BOND DEDUCTION
3088	*** INVALID IUNSURANCE CODE
3089	@@@ LIFE TABLE NOT FOUND
3090	@@@ UNION TABLE NOT FOUND

MESSAGE #	ERROR / INFORMATIONAL MESSAGE
3091	@@@ PREMIUM TABLE NOT FOUND
3092	* INSUFFICIENT NET AMOUNT, NO BANKRUPTCY DEDUCTION
3093	* INSUFFICIENT NET AMOUNT, NO BASIC LIFE DEDUCTION
3094	*** MILITARY LEAVE HOURS MUST BE IN 8 HOUR INCREMENTS
3095	* INSUFFICIENT NET AMOUNT, NO DEDUCTIONS COMPUTED
3096	* INSUFFICIENT NET AMOUNT, NO HEALTH DEDUCTION
3097	* INSUFFICIENT NET AMOUNT, NO BILL OF COLLECTION DEDUCTION
3098	* INSUFFICIENT NET AMOUNT, NO RET-FICA DEDUCTION
3099	* HRS CONVERTED FROM TO
3100	* 80 HOUR LWOP EXCEEDED, RIC AL AND SL
3101	* A/L USED EXCEEDS MAX
3102	* S/L USED EXCEEDS MAX
3103	* MILITARY LEAVE USED EXCEEDS MAX
3104	* TRAUMATIC LEAVE USED EXCEEDS MAX
3105	* COP LEAVE USED EXCEEDS MAX
3106	* COMP TIME LOST THROUGH AGING
3107	* COMP TIME USED APPLIED TO CURRENT EARNED
3108	*** REG-HRS MUST BE DIVISIBLE BY 8 FOR DAILY PAID EMPLOYEES *
3109	@@@ MER RECORD NOT FOUND
3110	*** ERROR IN UPDATING PAYFILE --- BACKOUT
3111	*** INVALID HOLIDAY LEAVE/WORKED HOURS
3112	*** EMPLOYEE ONLY PERMITTED REG FIELD ENTRY
3113	*** EMPLOYEE NOT ELIGIBLE FOR SHIFT WORK
3114	* INSUFFICIENT NET AMOUNT, NO MISCELLANEOUS DEDUCTION
3115	$$$$$$$$$$$$ THIS MESSAGE NUMBER IS NOT USED AT THIS TIME
3116	*** ONLY ZERO (0) HOURS T & A ALLOWED FOR SEVERANCE EMPLOYEE
3117	$$$$$$$$$$$$ THIS MESSAGE NUMBER IS NOT USED AT THIS TIME
3118	* INSUFFICIENT NET AMOUNT, NO MILITARY DEPENDENT DEDUCTION TAKEN
3119	* 80 HOURS LWOP EXCEEDED FOR PART TIME
3120	$$$$$$$$$$$$ THIS MESSAGE NUMBER IS NOT USED AT THIS TIME
3121	* SPLIT SHIFT : ADDITIONAL CARD REQUIRED
3122	*** DATA BASE DAMAGED - CHANGE IS NOT ALLOWED
3123	* CURRENT COMP HOURS CUT
3124	* INSUFFICIENT NET AMOUNT, NO OPTIONAL LIFE DEDUCTION
3125	*** TOTAL BASE + PAID LEAVE + NON PAID LEAVE FOR WEEK GREATER THAN 40
3126	* INSUFFICIENT NET AMOUNT, NO CIVIL-SERV-CREDIT DEDUCTION
3127	* INSUFFICIENT NET AMOUNT, NO CSRS DEDUCTION
3128	* LEAVE CATEGORY CHANGE FROM TO
3129	* PAID FLSA WEEK 1
3130	* REENTER T & A LEAVE HOURS CONVERTED TO COMP AS COMP ***
3131	* PAID FLSA WEEK 2
3132	* INSUFFICIENT NET AMOUNT, NO FEDERAL TAX OPTIONAL DEDUCTION
3133	@@@ NEBA TABLE NOT FOUND
3134	*** AGE CLASS OUT OF RANGE, NOT FOUND IN NEBA TABLE
3135	* INSUFFICIENT NET AMOUNT, NO NEBA DEDUCTION
3136	* BASE ADJUSTMENT NEGATES BASE EARNINGS, NOT APPLIED
3137	* EMPLOYEE REGISTER OUT OF BALANCE
3138	* GROSS ADJUSTMENT NEGATES GROSS EARNINGS, NOT APPLIED
3139	* OVERTIME ADJUSTMENT NEGATES OVERTIME EARNINGS, NOT APPLIED
3140	* INVALID LEAVE CATEGORY
3141	* NO ANNUAL LEAVE ACCRUED FOR 89 DAYS OR LESS EMPLOYEE APPOINTMENT
3142	* BASE EARNINGS > PREMIUM LIMIT, PREMIUM EARNINGS HAVE BEEN CUT
3145	*** T & A ILLEGAL, INACTIVE/REACTIVATED
3146	* NET ADJUSTMENT NEGATES NET PAY AMOUNT, NOT APPLIED
3147	* WK HOURS COMP TIME CONVERTED TO OVERTIME
3148	*** ONLINE PROCESSING NOT ALLOWED - PARTIAL = "2"
3149	* UNSUCCESSFUL UPDATE ON T & A PAYBLOCK AND CENTER
3150	* YTD-FICA EARN/DEDUCTION SHOULD CORRESPOND, NO FICA DEDUCTION
3151	* INSUFFICIENT NET AMOUNT, NO STATE TAX DEDUCTION
3152	* NEBA DEDUCTION NOT COMPUTED FOR COOP EMPLOYEE

MESSAGE #	ERROR / INFORMATIONAL MESSAGE
3153	*** OVERTIME HOURS MUST NOT BE GREATER THAN 336
3154	*** INTEREST TABLE NOT FOUND
3155	* MILITARY DEPOSIT ALREADY PAID IN FULL - DEDUCTION NOT TAKEN
3156	* MILITARY DEPOSIT EXCEEDS BALANCE DUE - DEDUCTED ONLY BALANCE DUE
3157	* INSUFFICIENT NET AMOUNT. NO FERS DEDUCTION
3158	*** PROGRAM ERROR; ERROR>0000000; LINE>0000000; PROGRAM>XXXXXXXX
3159	*** COMP TIME EARNED HOURS MUST NOT BE GREATER THAN 336
3160	* INSUFFICIENT NET AMOUNT. NO TSP DEDUCTION
3161	* INSUFFICIENT NET AMOUNT. NO TSP-PY DEDUCTION
3162	* TSP-ADJ NEGATES NET EARNINGS. NOT APPLIED
3163	* TSP-PRIOR-ADJ NEGATES NET EARNINGS. NOT APPLIED
3164	* INSUFFICIENT NET AMOUNT, NO FERS ADJUSTMENT
3165	*** INVALID T & A LEAVE OR OTHER LEAVE CODE
3166	*** EMPLOYEE NOT ELIGIBLE FOR CREDIT LEAVE
3167	*** EMPLOYEE NOT ELIGIBLE FOR COURT LEAVE
3168	*** EMPLOYEE NOT ELIGIBLE FOR HOME LEAVE
3169	*** HAZARDOUS RATE CODE MUST BE SET IF HAZARDOUS HOURS ENTERED
3170	@@@ HAZARDOUS RATE TABLE NOT FOUND
3171	* PARTIAL BANKRUPT DEDUCTION TAKEN
3172	* PARTIAL CHILD SUPPORT DEDUCTION TAKEN
3173	* PARTIAL U.S. DEBT DEDUCTION TAKEN
3174	* ADVANCED SICK LEAVE OWED BALANCE WAS REPAID THIS PERIOD
3175	* SEVERENCE PAY LIMIT HAS BEEN REACHED THIS PAY PERIOD
3176	* RELIGIOUS COMP TIME LOST THROUGH AGING
3177	* HOURS UNUSED COMP TIME PAID: DOLLARS ADDED TO GROSS PAY
3178	* INSUFFICIENT NET AMOUNT - NO COUNTY TAX ADJUSTMENT
3179	* INSUFFICIENT NET AMOUNT - NO FEGLI ADJUSTMENT
3180	* INSUFFICIENT NET AMOUNT - NO FEDERAL TAX ADJUSTMENT
3181	* INSUFFICIENT NET AMOUNT - NO TSP LOAN ADJUSTMENT
3182	* INSUFFICIENT NET AMOUNT - NO CFC ADJUSTMENT
3183	* INSUFFICIENT NET AMOUNT - NO UNION DUES ADJUSTMENT
3184	* INSUFFICIENT NET AMOUNT - NO CIV SERV CREDIT ADJUSTMENT
3185	* INSUFFICIENT NET AMOUNT - NO FEHB ADJUSTMENT
3186	* INSUFFICIENT NET AMOUNT - NO CITY TAX ADJUSTMENT
3187	* INSUFFICIENT NET AMOUNT - NO EIC ADJUSTMENT
3188	* INSUFFICIENT NET AMOUNT - NO STATE TAX ADJUSTMENT
3189	* INSUFFICIENT NET AMOUNT - NO HIT ADJUSTMENT
3190	* INSUFFICIENT NET AMOUNT - NO CSRS ADJUSTMENT
3191	*** SUNDAY HOURS NOT ALLOWED FOR THIS EMPLOYEE
3192	* INSUFFICIENT NET AMOUNT, NO CITY TAX DEDUCTION
3193	* INSUFFICIENT NET AMOUNT, NO COUNTY TAX DEDUCTION
3194	* INSUFFICIENT NET AMOUNT, NO BOND REFUND ADJUSTMENT
3195	*** INSUFFICIENT NET AMOUNT, NO TSP DEDUCTION
3196	*** INSUFFICIENT NET AMOUNT, NO TSP-PY DEDUCTION
3197	* BANKRUPTCY TOTAL DEDUCTION REACHED
3198	* U S DEBT TOTAL DEDUCTION REACHED
3199	* CHILD SUPPORT TOTAL DEDUCTION REACHED
3200	* CHILD SUPPORT DATE LIMIT REACHED
3201	* FIRST T & A FOR EMPLOYEE
3202	* SECOND T & A FOR EMPLOYEE
3203	* THIRD T & A FOR EMPLOYEE
3204	* TSP LOAN ALLOTMENT(S) NOT PAID
3205	* HEAD OF AGENCY SCHEDULED SALARY REACHED
3206	*** EMPLOYEE ALLOWED ONLY REGULAR AND RELIGIOUS HOURS
3207	* LAST SHIFT WORKED NOT ALLOWED FOR NON WAGE-BOARD EMPLOYEE
3208	*** LAST SHIFT WORKED REQUIRED FOR SPLIT SHIFT EMPLOYEE
3209	*** LAST SHIFT WORKED DOES NOT MATCH EMPLOYEE SHIFT CODE
3210	*** B/W BASE HRS + PAID LEAVE HRS + NON PAID LEAVE HRS NOT EQUAL 80
3211	*** REG-HRS CANNOT HAVE DECIMAL FOR DAILY PAID EMPLOYEES *
3212	* SICK LEAVE ADV DATE LIMIT EXCEEDED, NO ADV SICK LEAVE USED

MESSAGE #	ERROR / INFORMATIONAL MESSAGE
3213	* NITE ADJ NEGATES GROSS EARNINGS, NITE ADJ HRS AND DOLLARS NOT APPLIED
3214	* HAZ ADJ NEGATES GROSS EARNINGS, HAZ ADJ HRS AND DOLLARS NOT APPLIED
3215	* SUN ADJ NEGATES GROSS EARNINGS, SUN ADJ HRS AND DOLLARS NOT APPLIED
3216	* HOL WK ADJ NEGATES GROSS EARNINGS, HOL WK HRS AND DOLLARS NOT APPLIED
3217	* FIRE/F PREM ADJ NEGATES GROSS EARNINGS, FIRE/F PREM ADJ NOT APPLIED
3218	* FOREIGN DIFF ADJ NEGATES GROSS EARNINGS, FOREIGN DIFF ADJ NOT APPLIED
3219	* COLA ADJ NEGATES NET EARNINGS, COLA ADJ NOT APPLIED
3220	* INSUFFICIENT NET AMOUNT, NO CURRENT CODE FEHB ADJUSTMENT
3221	* FRMR ST DED ADJUSTMENT NEGATES NET PAY, FRMR ST ADJ NOT APPLIED
3222	@@@ EMPLOYEE ADDRESS RECORD NOT FOUND
3223	* THE STATE, FOR A FRMR STATE DED ADJ, WAD NOT A FRMR STATE IN EMP REC
3224	* FRMR ST ADJ AMT MAKES FRMR ST YTD DED GO NEGATIVE, FRMR ST ADJ NOT APP
3225	*** PAY PERIOD DOESNT CONTAIN A HOLIDAY
3226	*** FLEXITOUR COMP TIME LIMIT EXCEEDED
3227	*** FLEXITOUR CREDIT HOUR LIMIT EXCEEDED
3228	* FLEXITOUR CT LIMIT INVOLVED; OLDEST CT HOURS REFRESHED BY CURRENT EARNED
3229	* INSUFFICIENT NET PAY, RETIREMENT ADJUSTMENT NOT MADE
3230	* RE-EMPL-ANNUIT WHOSE SCHEDULED SALARY IS LESS THAN SALARY CURRENTLY PAID
3231	*** HAZARDOUS DUTY HOURS NOT ALLOWED FOR THIS EMPLOYEE
3232	*** FICA DEDUCTION NOT TAKEN; FICA DEDUCTION CAUSES NET PAY TO GO NEGATIVE
3233	* INSUFFICIENT NET AMOUNT, NO HIT/FICA DEDUCTION
3234	* OASDI AND/OR HIT EARNINGS HIGHER THAN TRETIR
3235	*** WEEKLY TOTAL HOURS > PAY-WK-UNCOM-TOUR-HRS FOR EITHER OR BOTH T+A WEEKS
3236	*** WEEKLY TOTAL HOURS NOT = PAY-WK-UNCOM-TOUR-HRS FOR EITHER OR BOTH T+A WKS
3237	*** REG/AL/SL/LWOP/AWOL/SUS HRS FOR A WEEK CAN NOT BE > PAY-WK-UNCOM-TOUR-HRS
3239	*** PART-TIME EMPLOYEE, PAY-PTHOURS (SCHEDULED HOURS) CAN NOT BE ZERO
3240	*** TOTAL PAID AND NON-PAID HOURS GREATER THAN 80 FOR A COMPRESSED WEEK EMPL
3241	*** DOLLAR LIMIT HAS BEEN REACHED FOR DOLLAR LIMITED EMPLOYEE
3242	*** HOUR LIMIT HAS BEEN REACHED FOR HOURLY LIMITED EMPLOYEE
3243	*** DAY LIMIT HAS BEEN REACHED FOR DAILY PAID EMPLOYEE
3244	* FLEXITOUR CREDIT HOURS EARNED HAVE BEEN FORFEITED DUE TO CREDIT BAL LIMIT
3245	* (BASE-EARN + BASE-ADJ) <= 0, NO TSP DEDUCTION
3247	* STAT LIMIT CUT RESULTED IN OVER TIME EARNINGS BEING CUT BY
3248	* STAT LIMIT CUT RESULTED IN NITE DIFF EARNINGS BEING CUT BY
3249	* STAT LIMIT CUT RESULTED IN HOL WRKED EARNINGS BEING CUT BY
3250	* STAT LIMIT CUT RESULTED IN SUN DIFF EARNINGS BEING CUT BY
3251	* TSP DIST RATES NOT PRESENT; 100% G-FUND ASSUMED FOR TSP BASIC GOV CONTRIB
3252	*** MILITARY LEAVE REPORTED GREATER THAN BALANCE AVAILABLE
3253	*** B/W BASE HRS NOT = SCHED PT HRS (CMPRSD WK EMP)
3254	*** B/W BASE HRS GREATER THAN SCHED HRS PT HRS (CMPRSD WK EMP)
3256	*** PERSONNEL SALARY TABLE NOT FOUND FOR COMPUTING HAZARD RATE
3257	*** REG-HRS CANNOT BE GREATER THAN 56 FOR DAILY PAID EMPLOYEES *
3258	* RETENTION-ALLOW-ADJ NEGATES GROSS EARNINGS, RET-ALLOW-ADJ NOT APPLIED
3259	* SUPERVISOR-DIFF-ADJ NEGATES GROSS EARNINGS, SUP-DIFF-ADJ NOT APPLIED
3261	* DONATED LEAVE IS ON FILE BUT IS NOT AVAILABLE FOR USE
3262	*** DAILY PAID EMP'S ARE NOT PERMITTED PREMIUM PAID HOURS
3265	* (TSP LOAN ADJ) + (TSP LOAN DED) < 0; TSP LOAN ADJ NOT MADE
3266	* (CFC ADJ) + (CFC DED) < 0; CFC ADJ NOT MADE
3267	* (UNION ADJ) + (UNION DED) < 0; UNION ADJ NOT MADE

MESSAGE #	ERROR / INFORMATIONAL MESSAGE
3268	*** HOURLY PAID WORKSCH "I" EMPLOYEES ONLY ALLOWED REG AND O.T. HOURS
3269	* MILITARY BALANCE DUE LESS THAN ZERO; NO DEDUCTION TAKEN
3270	* STAFF DIFF ADJ NEGATES GROSS EARNINGS, STAFF DIFF ADJ NOT APPLIED
3271	* A.U.O. ADJ NEGATES GROSS EARNINGS, A.U.O. ADJ NOT APPLIED
3272	* LOCAL PAY ADJ NEGATES GROSS EARNINGS, LOCAL PAY ADJ NOT APPLIED
3273	* ADV PAY ADJ NEGATES GROSS EARNINGS, ADV PAY ADJ NOT APPLIED
3274	* NO ADVANCE PAY DEDUCTION TAKEN THIS PAY PERIOD
3275	* STAT LIMIT CUT RESULTED IN A. U. O. EARNINGS BEING CUT BY
3276	* STAT LIMIT CUT RESULTED IN STAFF DIFF EARNINGS BEING CUT BY
3278	* ADV PAY ADJ CANCELLED, AS TOTAL PAID WOULD BE > TOTAL OWED
3279	* ADV PAY ADJ CANCELLED, AS REFUND WOULD BE > TOTAL CUM PAID
3280	*** NEW EMPLOYEE DOES NOT HAVE CHECK ROUTING INFORMATION
3281	* STATUTORY LIMIT CUTS CURRENT COMP TIME EARNED HOURS
3282	* WEEKLY T+A BASE HRS LESS THAN ONE HALF SCHED PT HRS
3283	*** TOTAL T+A BASE HRS LESS THAN SCHED PT HRS
3284	*** TOA HRS ENTERED WITH NO TOA BALANCE AVAILABLE
3285	*** INVALID LAST SHIFT WORKED FOR WAGE BOARD EMPLOYEE
3287	* LUMP SUM HOURS NOT EQUAL TO LEAVE BALANCES
3288	*** ADJ(S) REMOVED, RE-ENTER "TAEDIT" HOURS IF T&A STATUS IN ERROR
3289	* GARNISH DEDUCTION IS 25% OR MORE OF DISPOSIBLE INCOME
3290	* INSUFFICIENT NET AMOUNT, ONE OR MORE GARNISH PAYMENTS NOT MADE
3291	* ONE OR MORE GARNISH ACCOUNTS PAID IN FULL
3292	* FRMR CITY ADJ NEGATES NET PAY, FRMR CITY ADJ NOT APPLIED
3293	* FRMR CITY ADJ FORCES CITY YTD DEDUCTION NEGATIVE, ADJ NOT APPLIED
3294	* THE CITY, FOR A FRMR CITY ADJ, WAS NOT A FRMR CITY IN EMP REC
3295	@@@ NEBA TRAVEL TABLE NOT FOUND
3296	*** NEBA TRAVEL DATA NOT FOUND IN NEBA TRAVEL TABLE
3297	* INSUFFICIENT NET AMOUNT, NO NEBA TRAVEL DEDUCTION
3298	* STAT LIMIT CUT RESULTED IN AVAILABILITY PAY BEING CUT BY
3299	* AVAIL PAY ADJ NEGATES GROSS EARNINGS, AVAIL PAY ADJ NOT APPLIED
3300	*** COMPRESSED WORK WEEK NOT ALLOWED FOR EMPLOYEES WITH AVAILABILITY PAY
9001	*** TAX TABLE RECORD NOT ON FILE
9002	*** FEDERAL MARITAL CODE IS INVALID (NOT S/M)
9003	*** STATE CODE IS INVALID
9004	*** TAX TABLE RECORD NOT ON FILE
9005	*** STATE MARITAL CODE IS INVALID FOR THIS STATE
9006	*** RETIREMENT TABLE RECORD NOT ON FILE
9007	*** BASIC NEBA TABLE RECORD NOT ON FILE
9008	*** EMPLOYEE AGE NOT FOUND IN BASIC NEBA TABLE
9009	*** OPTIONAL NEBA TABLE NOT ON FILE
9010	*** EMPLOYEE AGE NOT FOUND IN OPTIONAL NEBA TABLE
9011	*** LIFE INSURANCE TABLE RECORD NOT ON FILE
9012	*** LIFE INSURANCE AGE GROUP IS INVALID (NOT 1 - 9)
9013	*** LIFE INSURANCE CODE INVALID - NOT IN LIFE INS TABLE
9014	*** HEALTH INSURANCE TABLE RECORD NOT ON FILE
9015	*** UNION DEDUCTION TABLE RECORD NOT ON FILE
9016	* NEW NORMALS NET IS NEGATIVE
9017	*** EMPLOYEE PAY MASTER RECORD NOT ON FILE
9018	*** EMPLOYEE MER MASTER RECORD NOT ON FILE
9019	*** NORMALS PAYBLOCK RECORD NOT ON FILE
9020	*** HOURLY RATE IS ZERO - NORMALS NOT COMPUTED
9021	*** PAYROLL CONTROL RECORD NOT ON FILE
9022	*** BIRTH DATE IS INVALID - NORMALS NOT COMPUTED
9023	*** TAXABLE GROSS LESS THAN MINIMUM TAX TABLE GROSS - NORMALS NOT COMPUTED
9024	*** NEW EMPLOYEE PAYBLOCK NOT ASSIGNED - NORMALS NOT COMPUTED
9025	*** NEBA TRAVEL TABLE RECORD NOT ON FILE
9158	*** PROGRAM ERROR; ERROR>0000000; LINE>0000000; PROGRAM>XXXXXXXX

THIS PAGE INTENTIONALLY LEFT BLANK.

Appendix C
PRODUCTION OPERATIONS GUIDE FOR NPPS

PRODUCTION OPERATIONS GUIDE FOR NPPS

This appendix provides the necessary information for Production Support personnel to perform an Agency Consolidated Payroll and Personnel daily business process.

OPERATIONAL DESCRIPTION

Each of ten NASA Centers' payroll will be performed from a single, consolidated NPPS and will execute within the logical partition (LPAR), NAPROD, provided by the NASA Automated Data Processing (ADP) Consolidation Center (NACC). Payroll business activities will be conducted as an agency by the Consolidated Payroll Office (CPO) located at Marshall Space Flight Center (MSFC). Personnel business activities will continue to be functionally supported by personnel offices at each respective Center. Center unique reporting and interfaces to NPPS will also be functionally supported at each of the Centers.

USER INTERFACE

- LOG ON/OFF - Users will login through the C/L SUPER SESSIONS MENU and select CPO-PROD, "CONSOLIDATED NPPS - PROD" which invokes access to the consolidated NPPS environment. The user will be prompted to select core NPPS or site unique operations.
- SECURITY – Designated NPPS User IDs will be distributed to the Center users as designated in the Agency Payroll Consolidation Security Procedures.
- PRINT CAPABILITIES – Core printing is provided from NPPS at the requested site through the Batch Job Scheduler (BJS) and through TSO. Dual print reports are those that need to be printed simultaneously at the CPO and Centers, as needed. Examples of these are the Personnel Mature Reports. At the Centers' discretion, site unique reports are run through the Site Unique BJS or by alternate methods such as TSO and printed at the Centers' local printers.
- ARCHIVED REPORTS – CPO and Centers have identified certain critical reports which utilize the Administrative Data Optical Storage System (ADOSS). These archived reports can be retrieved using ADOSS software.

CENTER UNIQUE OPERATIONS

With the exception of one core file, NPS2-PERACT-INT (#238) (an updatable personnel data file), all Center unique interfaces are the responsibility of each Center and are set up as 'Read-Only' access to the Core NPPS database.

DISASTER RECOVERY

In the event of a disaster at the Consolidated NPPS site, Marshall Space Flight Center, the most recent set of weekly backup tapes will be shipped to a hotsite location. The Consolidated NPPS environment will be loaded at the hotsite, with all users given the new location's access name. Users will be able to perform the majority of normal functions, and payroll will be able to be processed.

In the event of a disaster at a NASA Agency center other than Marshall Space Flight Center, payroll will be slightly delayed if the affected center can submit its time and attendance data within 24 hours of the normal deadline. If not, payroll processing will proceed with all other centers' time and attendance files. The affected center will have the previous pay period's net pay amounts sent to the Treasury with the normally processed center's data. Processing of that pay period's actual time and attendance for the center affected by the disaster will occur as soon as its data is available. The net pay amounts made will be handled as miscellaneous deductions.

PRODUCTION OPERATIONS INDEX

Each critical job will be treated as a separate section. The information for each section will include a brief overview, the expected execution schedule, data inputs expected for each process, any special instructions, and an output validation and product checklist. The Consolidated NPPS Operational Support team maintains the BJS for all core jobs listed here. The Operations Owner/User will be listed in each separate section. Initiation Procedures, including the use of the BJS, and Monitoring Procedures are explained in detail in section 5.0 of the UOG.

The batch jobs are separated into predefined NPPS processes and individual reports, each of which may be run independently.

ITEM	TITLE	PAGE
	Core Personnel and Payroll Individual Reports	C-47
	CPO Unique Jobs	C-60
	External Interfaces	C-62
AUTO	Auto Schedule Job	C-63
CA00001	Payroll Batch Mature	C-23
CA00003	Payroll Batch T & A	C-24
CA00004	Payroll Final Products and Reconciling Reports	C-27
CA00005	Payroll Final Reports	C-29
CA00006	Payroll Pay Period Initialization	C-5

ITEM	TITLE	PAGE
CA00009	Payroll Normals Recomputation	C-7
CA00014	Payroll Leave Year-End	C-40
CA00015	Payroll Fiscal Year-End	C-42
CA00020	Pay Year-End Update	C-43
CA00021	Pay Year-End Reports	C-44
CA00022	Create Year-End SSA Tape	C-46
CA00024	CFC Installation-Unique Interface	C-35
CA00025	Child Support Biweekly New Hires	C-36
CA00026	Child Support Quarterly Wages	C-37
CA00027	AdminSTAR Refresh	C-38
CA00045	California State Tax Quarter Tape	C-39
NE00001	Personnel Planning Actions Report	C-12
NE00002	Personnel Mature Reports	C-22
NE00003	Personnel Daily Reports	C-13
NE00004	TSP Letter	C-14
NE00008	Personnel Batch Mature	C-20
NE00010	APPR Act Not Reg 50	C-15
NE00081	Annual Comparability Increase	C-16
NE00096	Personnel Master Time File Recalculation	C-17
NE00366	Personnel Installation-Unique Interface	C-18
NE00370	NASA Personnel Edit Error Report	C-19
NE0SF50/ NE00400	Personnel SF50	C-8
NE0SF52/ NE00410	Personnel SF52	C-10
NECAPP1	Personnel Biweekly CAPPS Submissions	C-31
NECAPP2	Personnel CAPPS Monthly Submissions	C-32
NECAPP3	Personnel CAPPS Quarterly Submissions	C-33
NECAPP4	Personnel EOFY CAPPS Submissions	C-34

Table C-1 PRODUCTION OPERATIONS INDEX

CA00006 Payroll Pay Period Initialization

OPERATIONS OVERVIEW

This is a multipurpose consolidated job with the primary purpose of initializing the payroll master file for the new pay period. A number of payroll processes and reports are also steps in this job, and the transaction history file will be initialized in this run. A backup is taken at the beginning of this job. The steps contained in the job are as follows.

Step 1 Transaction Report created for the current day

Step 2 Payblock changes effective for the new pay period that were entered in the current pay period are applied

Step 3 Normals equate (sets old Normals fields to the values of the corresponding new Normals fields)

Step 4 Pay period initialization to initialize the data fields reused each pay period (and the quarterly and monthly accumulator fields when appropriate)

Step 5 Initialize Transaction History file

Step 6 Recompute FEGLI age group for each employee

Step 7 Payroll control data update

Step 8 Delete matured payroll suspense records

Step 9 Set Payroll data lock flag to blank

Step 10 Gains and losses to normals from payblock migration (moving employees from one payblock to another) producing a report

OPERATIONS OWNER/USER

Consolidated Payroll Office.

EXECUTION SCHEDULE

This job is to be performed after the final reporting jobs for payroll (CA00004 and CA00005) have been run. This is the initialization which begins each pay period cycle.

DATA INPUTS

The only input for this job is to choose the Centers to be run.

SPECIAL INSTRUCTIONS

None

OUTPUT VALIDATION AND PRODUCT CHECKLIST

The following outputs are produced from the various steps of the procedure.

Step 1	Report 201 – Daily Transaction Report
Step 2	Report 6170 – Payblock Changes
Step 3	Report 6070 - Normals Equate NPS2-PAY-MASTER, NPS2-NORM-FILE updated
Step 4	Report 6060 – Pay Period Initialization Report NPS2-PAY-MASTER, NPS2-MER-FILE updated
Step 5	Report 8000 – Transaction History Report
	Work File created with Logon Security Errors
	NPS2-PAY-IMFH – records deleted
Step 6	NPS2-PAY-MASTER – updated
Step 7	Report 4070 – Payroll Control Auto Update NPS2-PAYCTL-TABLE – updated
Step 8	Report 6140 – Payroll Batch Mature NPS2-PAY-SUSPENSE – records deleted
Step 9	NPS2-PAYCTL-TABLE – updated
Step 10	Report 505 - Gains and Losses to Normals from Payblock Migration

CA00009 Payroll Normals Recomputation

OPERATIONS OVERVIEW

The purpose of this consolidated job is to recalculate normals for each eligible employee and accumulate totals by payblock and installation. The following steps will be executed.

Step 1 Normals equate (sets old Normals fields to the values of the corresponding new Normals fields)

Step 2 Normals recalculation error report

Step 3 Normals equate again (sets old Normals fields to the values of the corresponding new Normals fields)

OPERATIONS OWNER/USER

Consolidated Payroll Office

EXECUTION SCHEDULE

This job must be run following job CA00006 each pay period. It is also run following Core Table installations and can be run on request.

DATA INPUTS

The only input for this job is to choose the Centers to run.

SPECIAL INSTRUCTIONS

This job may be rerun if an error occurs in processing.

OUTPUT VALIDATION AND PRODUCT CHECKLIST

The following outputs are produced from the various steps of the procedure.

Step 1 NPS2-PAY-MASTER, NPS2-NORM-FILE updated

Step 2 Report 6080 - Normals Recalculation Error Report
NPS2-PAY-MASTER, NPS2-NORM-FILE updated

Step 3 Report 6070 - Normals Equate
NPS2-PAY-MASTER, NPS2-NORM-FILE updated

NE0SF50 Personnel SF 50

OPERATIONS OVERVIEW

This job is run either in batch or online to print out employee data on SF 50s. The user has the option of printing on multi-part impact printer forms, onto a pre-printed sheet fed into laser printers or to have the form and data printed together through a xerox printer. The NE0SF50 job is automatically scheduled and run from the online SF50 process – SEL50 screen. The NE00400 job is scheduled manually through the BJS Process List.

OPERATIONS OWNER/USER

Center Personnel Offices.

EXECUTION SCHEDULE

The job is run on request.

DATA INPUTS

If online – SEL50 screen – choose “SF50”.

One of the following:

- All that have not been printed
- Facility Code
- Clerk ID
- Effective date range
- Specific NOACs – up to 8
- Specific SSNs – up to 6

Any of the following:

- Alignment printing
- Disregard print flag
- Do not set print flag
- Select this number and stop
- Reprint last set

Online - SEL50 screen:

- Printer Destination options that may be entered on the screen are: "IMPACT", "LASER", and “XEROX". If left blank, the default as set up in the BJS will be used.

- Copies option to be entered on screen: May enter any number between 1 and 5. (Note above, does not affect Impact print, if chosen – automatically 1 set.)

Batch - NE00400:

- Printer Destination options that may be changed thru selecting "Y"es to modify Recipient List: "IMPACT", "LASER", and “XEROX". If left blank, the default as set up in the BJS will be used.
- Copies option to be entered on parameter screen that is displayed. User may enter any number between 1 and 5. (Note above, does not affect Impact print, if chosen – automatically 1 set.)

SPECIAL INSTRUCTIONS

- The Batch Job Scheduler (BJS) Print Directory “Type” must contain the following characters for the code to understand it needs to format the data accordingly: “XER” for xerox printers, “IMP” for impact printers and “LAS” for laser printers.
- The BJS Privacy Label option may be turned “off” if banners are not wanted - especially for defaults of impact printing.
- The BJS Print Recipient List must by "Y" for batch job NE00400 to allow changing the recipient list – the only way to modify print destination & number of copies in the batch option.
- The User must say “Y” to change recipient list for NE00400 to modify print destination or number of copies.
- If Impact printer chosen, only "1 set" will be printed, regardless of number of copies requested.
- If Xerox printer chosen, copies will be collated. Example all "Employee Copies" will print together, all "Payroll Copies" together, etc.
- If Laser printer chosen, each SF50 prints Copy 1, Copy 2, etc. - not collated.

OUTPUT VALIDATION AND PRODUCT CHECKLIST

SF 50 forms are printed.

NE0SF52 Personnel SF 52

OPERATIONS OVERVIEW

This job is run either in batch or online to print out employee data on SF 52s. The user has the option of printing on multi-part impact printer forms, onto a pre-printed sheet fed into laser printers or to have the form and data printed together through a xerox printer. The NE0SF52 job is automatically scheduled and run from the online SF50/SF52 process – SEL50 screen. The NE00410 job is scheduled manually through the BJS Process List.

OPERATIONS OWNER/USER

Center Personnel Offices.

EXECUTION SCHEDULE

The job is run as required.

DATA INPUTS

If online – SEL50 screen – choose “SF52”.

One of the following:

- All that have not been printed
- Facility Code
- Clerk ID
- Effective date range
- Specific NOACs – up to 8
- Specific SSNs – up to 6

Any of the following:

- Alignment printing
- Disregard print flag
- Do not set print flag
- Select this number and stop
- Reprint last set

Online - SEL50 screen:

- Printer Destination options that may be entered on the screen are: "IMPACT", "LASER", and “XEROX". If left blank, the default as set up in the BJS will be used.

- Copies option to be entered on screen: May enter any number between 1 and 5. (Note above, does not affect Impact print, if chosen – automatically 1 set.)

Batch - NE00410:

- Printer Destination options that may be changed thru selecting "Y"es to modify Recipient List: "IMPACT", "LASER", and “XEROX". If left blank, the default as set up in the BJS will be used.
- Copies option to be entered on parameter screen that is displayed. User may enter any number between 1 and 5. (Note above, does not affect Impact print, if chosen – automatically 1 set.)

SPECIAL INSTRUCTIONS

- The Batch Job Scheduler (BJS) Print Directory “Type” must contain the following characters for the code to understand it needs to format the data accordingly: “XER” for xerox printers, “IMP” for impact printers and “LAS” for laser printers.
- The BJS Privacy Label option may be turned “off” if banners are not wanted - especially for defaults of impact printing.
- The BJS Print Recipient List must by "Y" for batch job NE00410 to allow changing the recipient list – the only way to modify print destination & number of copies in the batch option.
- The User must say “Y” to change recipient list for NE00410 to modify print destination or number of copies.
- If Impact printer chosen, only "1 set" will be printed, regardless of number of copies requested.
- If Xerox printer chosen, copies will be collated. Example all "Employee Copies" will print together, all "Payroll Copies" together, etc.
- If Laser printer chosen, each SF50 prints Copy 1, Copy 2, etc. - not collated.

OUTPUT VALIDATION AND PRODUCT CHECKLIST

SF 52 forms are printed.

NE00001 Personnel Planning Actions Report

OPERATIONS OVERVIEW

This job is run to produce a report after planning actions have been generated. The job is automatically placed on the job queue by the online planning action process if any actions with Nature of Action Codes of 891 and 893 (Within Grade Increase) or 943 (Thrift Savings Plan) are placed on the NPS2-PER-SUSPENSE file.

OPERATIONS OWNER/USER

Center Personnel Offices.

EXECUTION SCHEDULE

This is run after planning actions have been generated, usually at the beginning of each month.

DATA INPUTS

The following input parameters must be provided.

Report sequence of SSN, NOAC, effective date or report sequence of name, NOAC, effective date.

SPECIAL INSTRUCTIONS

None.

OUTPUT VALIDATION AND PRODUCT CHECKLIST

This job produces the following report.

Report 356 - Excess LWOP Report

NE00003 Personnel Daily Reports

OPERATIONS OVERVIEW

This job is run to print reports of the messages written daily in order to maintain a transaction audit trail. The job produces reports for both Personnel and Payroll.

OPERATIONS OWNER/USER

Center Personnel Offices are owners, both Center Payroll and Personnel Offices are users.

EXECUTION SCHEDULE

This job may be run daily after daily online input has been completed.

DATA INPUTS

None.

SPECIAL INSTRUCTIONS

None.

OUTPUT VALIDATION AND PRODUCT CHECKLIST

This job produces the following reports.

Report 152 - Table Action Report

Report 9600 - Master time Recalculation Report

Report 9610 – Automatic Performance Rating

Report 201 - Transaction Report (Payroll)

Report 5010 - Administrative Transaction Report

NE00004 TSP Letter

OPERATIONS OVERVIEW

This job is executed on request to produce the TSP letter.

OPERATIONS OWNER/USER

Center Personnel Offices.

EXECUTION SCHEDULE

This job is run on request.

DATA INPUTS

This job requires that 2 processing flags are set; one flag is set to print 943 and the other flag is set to disregard 943 print status.

SPECIAL INSTRUCTIONS

None.

OUTPUT VALIDATION AND PRODUCT CHECKLIST

Outputs from the job are a TSP letter for each employee (Report 254A and 254B TSP Letter).

NE00010 Appr Act Not Reg 50

OPERATIONS OVERVIEW

This job is run to generate memos of approved personnel actions that do not require an SF 50 to be printed.

OPERATIONS OWNER/USER

Center Personnel Offices.

EXECUTION SCHEDULE

This job is run on request.

DATA INPUTS

The following are inputs to this job.

Whether to disregard print flag (this will result in another print-out even though one has already been produced and the print flag has been set)

Whether to print actions with NOAC

Desired sort sequence (name or organization assigned)

Facility Code

SPECIAL INSTRUCTIONS

None.

OUTPUT VALIDATION AND PRODUCT CHECKLIST

The following output is produced.

Report 151 - Approved Action Not Requiring a SF 50

NPS2-PER-SUSPENSE updated to indicate memo has been printed

NE00081 Annual Comparability Increase (ACI)

OPERATIONS OVERVIEW

This job is run to calculate each employee's Annual Comparability Increase.

OPERATIONS OWNER/USER

Center Personnel Offices.

EXECUTION SCHEDULE

This job is scheduled through the online ACI screen as required, typically in January each year.

DATA INPUTS

- Authority codes
- Effective date
- Pay Table code
- Grades
- Print memo in lieu of SF50 Y/N?
- Perform updates in Batch Y/N?

SPECIAL INSTRUCTIONS

When the entire Agency is performing ACI in January, these jobs should be run in Batch mode – as chosen on the ACI screen. This allows adequate monitoring of the job.

There is JCL to support this job (NE00081), however it can not be scheduled through the BJS and thus has no Job or Report Directory information.

OUTPUT VALIDATION AND PRODUCT CHECKLIST

The NPS2-PER-SUSPENSE file is updated.

NE00096 Personnel Master Time File Recalculation

OPERATIONS OVERVIEW

This job is run to update time-dependent fields (Age: Current, Grade: Time-in-Grade, Install: Time Current, SCD: Fed Years, and SCD: NASA Years) on NPS2-PER-MASTER.

OPERATIONS OWNER/USER

Center Personnel Offices.

EXECUTION SCHEDULE

The job is run as required.

DATA INPUTS

None.

SPECIAL INSTRUCTIONS

None.

OUTPUT VALIDATION AND PRODUCT CHECKLIST

The following outputs are produced.

Updated file - NPS2-PER-MASTER

Report 9600 - Master Time Recalculation Report

NE00366 Personnel Installation-Unique Interface

OPERATIONS OVERVIEW

This job is run to read personnel actions that have been placed on external file NPS2-PERACT-INT and write them to suspense (NPS2-PER-SUSPENSE). At the end of the job, the NPS2-PERACT-INT file will have been deleted.

OPERATIONS OWNER/USER

Center Personnel Offices.

EXECUTION SCHEDULE

This job is run on request and as an automatic final step in the daily Employee Express process CAEE014. (See Employee Express ICD.)

DATA INPUTS

The NPS2-PERACT-INT file is input.

SPECIAL INSTRUCTIONS

None.

OUTPUT VALIDATION AND PRODUCT CHECKLIST

Outputs are as follows.

NPS2-PER-SUSPENSE file updated

Report 366 - Installation-Unique System Interface Major Errors Report

NE00370 NASA Personnel Edit Error Report

OPERATIONS OVERVIEW

This job is executed to apply NASA Personnel edits to suspended personnel transactions.

OPERATIONS OWNER/USER

Center Personnel Offices.

EXECUTION SCHEDULE

This job is run on request.

DATA INPUTS

None.

SPECIAL INSTRUCTIONS

None.

OUTPUT VALIDATION AND PRODUCT CHECKLIST

The following report is produced.

NASA Personnel Edit Error Report

Report 370 – Edit Bypass Messages

NE00008 Personnel Batch Mature

OPERATIONS OVERVIEW

This job is executed to apply suspended personnel transactions to the database. As each transaction to be matured is selected from the NPS2-PER-SUSPENSE file, that transaction is completely re-edited unless edits were bypassed when the transaction was placed on this file. If a transaction fails any edit, it is not matured, and all subsequent transactions for that same employee are not matured. Each transaction successfully passing all edits updates the NPPS database.

The Personnel Batch Mature process also schedules job NE00002 (Mature Reports).

OPERATIONS OWNER/USER

Center Personnel Offices.

EXECUTION SCHEDULE

This job is run on request through Batch or Online, but can not run when the Mature Lock is on. This lock is set automatically between Jobs CA00004 and CA00006, and may be manually locked at other times. CPO requests that the mature process be run through Batch only during ACI processing in January of each year, to allow adequate monitoring of all Agency jobs.

DATA INPUTS

This job is scheduled through the BJS Mature Process component. Inputs are as follows.

Effective date - Determines which suspended transactions are to be matured. Any suspended action is matured if the transaction effective date falls on or before the effective date supplied.

Which employees to be matured - Option provided to choose all employees by leaving SSN areas blank or only selected employees.

SPECIAL INSTRUCTIONS

If the job aborts, the suspense data is corrected and the job is resubmitted.

OUTPUT VALIDATION AND PRODUCT CHECKLIST

Outputs resulting from this job are as follows.

NPS2-PER-HISTORY file updated with a before-and-after image of the employee's master record

NPS2-PER-MASTER file updated

NPS2-PAY-MASTER file updated

NPS2-TALC-INT file updated (if TALC Prsnt Cntrl Flag = "Y")

NPS2-TX-FILE file update

NPS2-IMFH file updated

NPS2-PER-SUSPENSE file updated to flag transactions involved in the Mature process

This job schedules NE00002 which produces these reports:

Report 358 - Mature Transaction and Error Report

Report 359 - Mature Transaction Integration Report

NE00002 Personnel Mature Reports

OPERATIONS OVERVIEW

The Personnel Mature Reports job is scheduled through the Online Mature Process automatically when the user elects to run the mature process online, or it may be scheduled in the BJS.

OPERATIONS OWNER/USER

Center Personnel Offices are the owners, both the Center Personnel Offices and Center Payroll Offices are users.

EXECUTION SCHEDULE

After transactions have been matured online, this is automatically submitted to the job queue of the BJS. Suspended actions that are matured and over five days old will be deleted from NPS2-PER-SUSPENSE at the end of this run.

DATA INPUTS

If this job is scheduled through BJS, the user provides start and stop dates, facility code, and sort sequence when the job is scheduled.

SPECIAL INSTRUCTIONS

This job will start only if the Mature Running control flag is "N" on the Personnel Control Screen. This will prohibit conflict between the reporting and mature update process.

OUTPUT VALIDATION AND PRODUCT CHECKLIST

This job results in two reports.

Report 358 - Transaction/Error Report

Report 359 - Mature Integration Report

CA00001 Payroll Batch Mature

SYSTEM OVERVIEW

This consolidated job is executed to read the NPS2-PAY-SUSPENSE file and deletes those actions that have already been matured.

OPERATIONS OWNER/USER

Consolidated Payroll Office.

EXECUTION SCHEDULE

The job is run as required, but must be run once each pay period to delete matured transactions.

DATA INPUTS

The input parameters for this job are selection date, sort sequence by name or SSN, and Centers chosen.

SPECIAL INSTRUCTIONS

None.

OUTPUT VALIDATION AND PRODUCT CHECKLIST

The following are output from this job.

Updated file - NPS2-PAY-SUSPENSE

Report 6141 - Payroll Batch Mature

Report 201 - Transactions Report

CA00003 Payroll Batch T & A

OPERATIONS OVERVIEW

This consolidated job uses the NPS2-PAY-TA-DATA file to process hours, compute pay and leave, and post results. Edit and control reports are produced from the process. Backups are taken both at the beginning and at the ending of this job. The steps of the job are as follows:

Step 1 Produce T&A cards and report for LWOP

Step 2 Edit T&A cards

Step 3 IMFH Processing Report produced

Step 4 T&A Processing Report produced

Step 5 Leave and Pay Processing Report produced

Step 6 T&A Reported Hours Report produced

Step 7 CPO Unique Daily Transaction Report (without Batch) produced

OPERATIONS OWNER/USER

Consolidated Payroll Office.

EXECUTION SCHEDULE

This job is normally run on Monday of pay week when the T&A card data preparation has been completed. This job must run after CA00006 in the current pay period.

DATA INPUTS

The input to this component is provided through a mandatory standard interface file (NPS2-PAY-TA-DATA File) created by each installation. The format for this flat file, according to its Data Definition Module, is shown in Table C-3. Input parameters for sort sequence of Name or SSN are required for the reports that result from this job, and the Centers must be chosen.

TYL	DB	NAME	F	LENGTH	S	D
1	AA	NPPS-PAY-TA-CENTER	A	4	F	
1	AB	NPPS-PAY-TA-PB	A	2	F	
1	AC	NPPS-PAY-TA-SSN	A	9	F	D
1	AD	NPPS-PAY-TA-WEEK	A	1	F	
1	AE	NPPS-PAY-TA-SEQ	A	1	F	
1	BA	NPPS-PAY-TA-SHIFT	A	1	F	
1	BB	NPPS-PAY-TA-REG	P	3.2	N	
1	BC	NPPS-PAY-TA-OT	P	3.2	N	
1	BD	NPPS-PAY-TA-NITE	P	3.2	N	
1	BE	NPPS-PAY-TA-CT-EARN	P	3.2	N	
1	BF	NPPS-PAY-TA-HOL-WKD	P	3.2	N	
1	BG	NPPS-PAY-TA-SUN	P	3.2	N	
1	BH	NPPS-PAY-TA-HAZ	P	3.2	N	
1	BJ	NPPS-PAY-TA-AL	P	3.2	N	
1	BK	NPPS-PAY-TA-SL	P	3.2	N	
1	BL	NPPS-PAY-TA-CT-TKN	P	3.2	N	
1	BM	NPPS-PAY-TA-LWOP	P	3.2	N	
1	BN	NPPS-PAY-TA-SUSP	P	3.2	N	
1	BP	NPPS-PAY-TA-AWOL	P	3.2	N	
1	BR	NPPS-PAY-TA-HOL-LV	P	3.2	N	
1	BT	NPPS-PAY-TA-RSTR-LV	P	3.2	N	
1	CA	NPPS-PAY-TA-OTH-CD1	A	1	F	
1	CB	NPPS-PAY-TA-OTH-LV1	P	3.2	N	
1	CC	NPPS-PAY-TA-OTH-CD2	A	1	F	
1	CD	NPPS-PAY-TA-OTH-LV2	P	3.2	N	
1	CE	NPPS-PAY-TA-OTH-CD3	A	1	F	
1	CF	NPPS-PAY-TA-OTH-LV3	P	3.2	N	
1	CG	NPPS-PAY-TA-OTH-CD4	A	1	F	
1	CH	NPPS-PAY-TA-OTH-LV4	P	3.2	N	

Table C-3 Format of NPS2-PAY-TA-DATA File

SPECIAL INSTRUCTIONS

The Pay Initialization (CA00006) job must be run before the Time and Attendance (CA00003) job. This job may be restarted if it aborts while processing a NATURAL step. Restart is required if the BJS log contains the message "**nn RESTART IS REQUIRED FOR program name." The "nn" identifies which BJS support program caught the error (NPB40nn). Initiate restart by scheduling the job with an "R" using the BJS.

OUTPUT VALIDATION AND PRODUCT CHECKLIST

This job produces the following output.

Step 1 NPS2-PAY-TA-DATA file updated
Report 3005 - T&A Cards for LWOP

Step 2 Files updated -
NPS2-PAY-TA-DATA
NPS2-PAY-MASTER
NPS2-MER-FILE
NPS2-PER-MASTER
NPS2-REG-FILE
NPS2-PAY-TSP-ADJ
NPS2-TAR-FILE
NPS2-PAYMSG-TABLE
NPS2-IMFH
Report 3100 – First Report of T&A Errors

Step 3 Reports 5101C, 5101M, 5101O, 5101T - IMFH Processing Reports

Step 4 Report 5101B - T&A Processing Report

Step 5 Report 203 – Leave and Pay Processing Report

Step 6 Report 100 - T&A Reported Hours

Step 7 Report 201B – Daily Transaction Report (CPO Unique)

CA00004 Payroll Final Products and Reconciling Reports

OPERATIONS OVERVIEW

This consolidated job produces reports required for historical records and interfaces. It also produces standard payroll products required for terminating employees; generates payroll history for all employees on the payroll master files. A backup is taken at the beginning of this job.

OPERATIONS OWNER/USER

Consolidated Payroll Office.

EXECUTION SCHEDULE

This job must be run every pay period, following job CA00003.

DATA INPUTS

Following are input parameters for this job.

For several processes, whether sequence is Name or SSN, facility code is optional.

For the CFC Register, whether the sequence should be CFC code and name or CFC code and SSN (default equals CFC code and SSN)

For Payroll Register, whether to sort by name, SSN, payblock by name, or payblock by SSN; and selection of SSN, payblock, entire Center or totals only.

For Fund Source report, whether a selection of either the current pay period or FTE YTD and employee group (CSRS, FERS, neither, or all).

For New Hire data, batch number and pay period dates.

For NEBA, pay period ending date and sequence.

Centers chosen.

SPECIAL INSTRUCTIONS

None

OUTPUT VALIDATION AND PRODUCT CHECKLIST

The following reports and data are produced.

Files updated: NPS2-PAYHIST-ONE, NPS2-PAYHIST-TWO

Report 102 – Net Pay/Voluntary Allotment Register

Report 103 – Net Pay-Non-EFT

Report 106 – Payroll Cash Awards

Report 117 – Cash Awards Edit Listing

Report 201 – Transaction Report

Report 202 – Payroll Register and datasets

Report 204 – T&A Paid Hours

Report 314 – TSP Transmission Tape Listing

Report 402 – CFC Register

Report 403 – SF2812 Withholding and Contributions for FEHB, FEGLI, and Retirement

Report 406 – SF1166 Voucher and Schedule of Payments

Report 456 – NEBA Biweekly summary

Report 457 – New Hire Report for SSA

Report 500 – Non-EFT Tape Listing and Employee Non-EFT Net Pay Report

Report 506 – Bond Tape Listing

Report 507 – TSP Voucher

Report 818 – Fund Source 1

Report 6090 – Electronic Funds Transfer

Pay Period EFT Dataset

Pay Period Net Check Dataset

Pay Period TSP Dataset

Pay Period Bond Dataset

Pay Period NEBA Dataset

Pay Period New Hire Dataset

CA00005 Payroll Final Reports

OPERATIONS OVERVIEW

This job produces the payroll final reports for the pay period.

OPERATIONS OWNER/USER

Consolidated Payroll Office.

EXECUTION SCHEDULE

This job is normally run immediately following Job CA00004.

DATA INPUTS

Input parameters for this job include the following.

Sequence for several processes, whether name or SSN.

For the bond status register and biweekly retirement report, whether the sequence should be by name, payblock and name, payblock and SSN, or SSN.

For Wage and Tax reports, whether terminated employees, all employees or totals only; and sort sequence from 8 choices.

For PCS, whether sort sequence by SSN, payblock & SSN or name.

For health insurance not paid, whether sort sequence of FEHB Code & name or FEHB code & SSN.

For tax withholding, whether FIT, FICA, or HIT; sort sequence of payblock and name or payblock and SSN.

For tax withholding, whether state, country, or city; time period of month, quarter, or annual.

Centers chosen.

SPECIAL INSTRUCTIONS

This job can be rerun with no data restore necessary.

OUTPUT VALIDATION AND PRODUCT CHECKLIST

The following reports are produced.

Report 104 – Health Insurance Not Paid

Report 107 – Limited Appointment Employees

Report 111 – Permanent Change of Station

Report 203 – Leave & Pay Processing

Report 301 – Bond Status Register

Report 302 – Bond Enrollment

Report 401 – Union Dues Report

Report 404 – Bond Request Register

Report 408 – State/County/City Taxes

Report 409 – SF1150 Record of Leave

Report 410 – Semi Annual Headcount

Report 415 – FIT/FICA/HIT Taxes

Report 418 – W2 Wage & Tax

Report 420 – Biweekly Retirement

Report 411 – CSRS Separations & Transfers

Report 412 – FERS Separations & Transfers

Report 518 – Non-NPPS W2 Wage & Tax

NECAPP1 Personnel Biweekly CAPPS Submissions

OPERATIONS OVERVIEW

This consolidated job transmits personnel status, transaction, FTE actual usage data, and Fund Source 1 data.

OPERATIONS OWNER/USER

Consolidated Payroll Office submits, however Agency Personnel located at MSFC are the users.

EXECUTION SCHEDULE

The job should be run after CA00004 and prior to CA00006.

DATA INPUTS

Following are input parameters for these jobs.

For the Fund Source 1 Report one of four criteria must be selected (CSRS only, FERS only, exclude all CSRS and FERS, and select all employees).

Organization code to include and/or exclude can be entered and a ‘Y’ (default) can be entered to report the current pay period or a blank for FTE Year-To-Date information.

Centers chosen.

SPECIAL INSTRUCTIONS

None.

OUTPUT VALIDATION AND PRODUCT CHECKLIST

Following are outputs for these jobs.

Datasets for transmittal

(Agency HiLevel Qualifier).TX

(Agency HiLevel Qualifier).STS

(Agency HiLevel Qualifier).ACTL

(Agency HiLevel Qualifier).RPT818

NECAPP2 Personnel CAPPS Monthly Submissions

OPERATIONS OVERVIEW

This consolidated job transmits summary personnel status and transaction data.

OPERATIONS OWNER/USER

Consolidated Payroll Office submits, however Agency Personnel located at MSFC are the users.

EXECUTION SCHEDULE

This job should be run after CA00004 and prior to CA00006 for the last full pay period of each month (PAY CNTL: MONTH-TO-DATE = "Y").

DATA INPUTS

Centers are chosen.

SPECIAL INSTRUCTIONS

None.

OUTPUT VALIDATION AND PRODUCT CHECKLIST

Following are outputs for this job.

Dataset for transmittal

(Agency HiLevel Qualifier).SF113A

NECAPP3 Personnel CAPPS Quarterly Submissions

OPERATIONS OVERVIEW

This consolidated job transmits organization table data.

OPERATIONS OWNER/USER

Agency Personnel support located at MSFC.

EXECUTION SCHEDULE

This job is run on the quarter-end date.

DATA INPUTS

Following are input parameters for this job.

Quarter number.

Centers chosen.

SPECIAL INSTRUCTIONS

None.

OUTPUT VALIDATION AND PRODUCT CHECKLIST

Following are outputs for this job.

Dataset for transmittal

(Agency HiLevel Qualifier).ORGNZTN

NECAPP4 Personnel EOFY CAPPS Submissions

OPERATIONS OVERVIEW

This consolidated job transmits personnel status and transaction data.

OPERATIONS OWNER/USER

Agency Personnel support located at MSFC.

EXECUTION SCHEDULE

This job should be run following the last day of the fiscal year.

DATA INPUTS

Following are input parameters for these jobs.

Pay Period Ending Date for the last full pay period ending in the fiscal year.

Centers chosen.

SPECIAL INSTRUCTIONS

None.

OUTPUT VALIDATION AND PRODUCT CHECKLIST

Following are outputs for these jobs.

Dataset for transmittal

(Agency HiLevel Qualifier).TX

(Agency HiLevel Qualifier).STS

(Agency HiLevel Qualifier).SF113A

CA00024 CFC Installation-Unique Interface

OPERATIONS OVERVIEW

This non-consolidated job is run to read CFC transactions that have been placed in an external file and apply them to the employee master records.

OPERATIONS OWNER/USER

Consolidated Payroll Office.

EXECUTION SCHEDULE

This job is executed during the first new leave period of the Calendar year, using datasets provided by Centers utilizing this automatic interface.

DATA INPUTS

The external CFC interface file is input from a participating Center.

SPECIAL INSTRUCTIONS

After all CFC changes have been processed, the Payroll Normals Recomputation (CA00009) job should be executed.

OUTPUT VALIDATION AND PRODUCT CHECKLIST

Outputs are as follows.

Updated file - NPS2-PAY-MASTER

Report NAB6188 - CFC Transaction Interface Report

CA00025 Child Support Biweekly New Hires

OPERATIONS OVERVIEW

This consolidated job produces a dataset and report of new hires within the last pay period. The dataset is transmitted to the National Health Directory of New Hires within the Office of Child Support Enforcement/Health and Human Services. This dataset is also created as a part of CA00004. Recreations of this dataset may be submitted separately using CA00025.

OPERATIONS OWNER/USER

Consolidated Payroll Office.

EXECUTION SCHEDULE

This job is available as an on-request process.

DATA INPUTS

The input parameters for this job are Centers chosen and Batch Number.

This is the Pay Period number preceded by zeroes with an option to input manually should a retransmission be necessary.

SPECIAL INSTRUCTIONS

None.

OUTPUT VALIDATION AND PRODUCT CHECKLIST

The following outputs are produced.

Child Support Enforcement Program Biweekly New Hire Report - 457

New Hire Dataset – (Agency Hi-Level Qualifier).NHIR.

CA00026 Child Support Quarterly Wages

OPERATIONS OVERVIEW

This consolidated job produces a dataset and report of quarterly wages. The dataset is transmitted to the National Directory of New Hires within the office of Child Support Enforcement/Health and Human Services.

OPERATIONS OWNER/USER

Consolidated Payroll Office.

EXECUTION SCHEDULE

This job must be run after the last pay period in each quarter following CA00004 and prior to Initialization (CA00006).

DATA INPUTS

The input parameters for this job are quarter number, batch number and Centers chosen.

Quarter = 1 - Jan – Mar
Quarter = 2 - Apr – Jun
Quarter = 3 - Jul – Sep
Quarter = 4 - Oct – Dec

Batch numbers = pay period number preceded by zeroes with an option to input manually.

SPECIAL INSTRUCTIONS

None.

OUTPUT VALIDATION AND PRODUCT CHECKLIST

The following outputs are produced.

Child Support Enforcement Program Quarterly Gross Report - 458

Quarterly Wage Dataset – (Agency Hi-Level Qualifier).QWAG

CA00027 ADMINSTAR Refresh

OPERATIONS OVERVIEW

This consolidated job is run to send changes to the Adminstar system when an employee's personnel data and/or organization code changes.

OPERATIONS OWNER/USER

Consolidated Payroll Office.

EXECUTION SCHEDULE

This job is run every pay period following CA00004 and prior to CA00006.

DATA INPUTS

Centers are chosen as input to this job.

SPECIAL INSTRUCTIONS

None.

OUTPUT VALIDATION AND PRODUCT CHECKLIST

The following output is produced.

Datasets for transmittal to the AdminSTAR system

Report 27 - AdminSTAR Refresh of Org

Report 28 - AdminSTAR Refresh of Learner

CA00045 California State Tax Quarter Tape

OPERATIONS OVERVIEW

This consolidated job is run to create a dataset for transmittal to the state of California to report withholding information for employees having taxes withheld for California.

OPERATIONS OWNER/USER

Consolidated Payroll Office.

EXECUTION SCHEDULE

This job is run every quarter, following CA00004 and prior to CA00006.

DATA INPUTS

Centers chosen.

SPECIAL INSTRUCTIONS

None.

OUTPUT VALIDATION AND PRODUCT CHECKLIST

The following output is produced.

Dataset for transmittal to the state of California.

Round reel tape creation containing a copy of this dataset.

CA00014 Payroll Leave Year-End

OPERATIONS OVERVIEW

This consolidated job initializes the leave year-to-date data on the payroll master, produces leave year-end reports, deletes inactive employees from the master files if selected during the pay year-end process, and computes the projected annual leave balance and the NEBA Age for all active employees. There is a backup at the beginning of this job. These are accomplished in the following steps.

Step 1 Updates for the leave year-end performed

Step 2 Inactive employees deleted from the files and summary report created

Step 3 Update FEGLI year and recompute FEGLI age group for each employee

Step 4 Donated Annual Leave History Report

Step 5 Projected Annual Leave computation for all active employees

Step 6 NEBA Age recalculation

OPERATIONS OWNER/USER

Consolidated Payroll Office.

EXECUTION SCHEDULE

This job should run just before initialization of the first full pay period of the calendar year, to initialize leave data for the new leave year.

DATA INPUTS

Following are the input parameters for this job.

Sequence of name or SSN (default equals SSN)

Effective year for Donated Leave

Centers chosen

SPECIAL INSTRUCTIONS

None

OUTPUT VALIDATION AND PRODUCT CHECKLIST

The following are output from this job.

Step 1 Files updated - NPS2-PAY-MASTER and NPS2-PER-MASTER
Report 6030 – Leave Year End Update

Step 2 Files updated - NPS2-PAY-MASTER and NPS2-PER-MASTER
Report 6032 - Inactive Employee Deletion

Step 3 File updated - NPS2-PAY-MASTER

Step 4 Report 109 - Donated Annual Leave History

Step 5 File updated - NPS2-PAY-MASTER
Report 6034 – Projected Leave at Beginning of Year

Step 6 File updated - NPS2-MER-FILE
Report 6010 – NEBA Age Update

CA00015 Payroll Fiscal Year-End

OPERATIONS OVERVIEW

This consolidated job initializes military leave and other fiscal year-to-date data and computes prior year carryover for military leave in days. A backup is taken at the beginning of this job.

OPERATIONS OWNER/USER

Consolidated Payroll Office.

EXECUTION SCHEDULE

This job is to be run just before initialization of the last full pay period in September to initialize data for the new fiscal year.

DATA INPUTS

Centers chosen.

SPECIAL INSTRUCTIONS

None.

OUTPUT VALIDATION AND PRODUCT CHECKLIST

The following are outputs from this job.

NPS2-MER-FILE file updated

Report 6020 - Military Leave Fiscal Year End Report

CA00020 Pay Year-End Update

OPERATIONS OVERVIEW

This consolidated job initializes the pay year-to-date data on the payroll master file and sets a flag that marks inactive employees for deletion at leave year-end (if the delete parameter is selected). Only NAB6050 executes in this job, and it produces a single report. A backup is taken at the beginning of this job.

OPERATIONS OWNER/USER

Consolidated Payroll Office.

EXECUTION SCHEDULE

This job must be run just before initialization of the last full pay period of the pay year in which employees receive payment.

DATA INPUTS

The input parameter for this job is the inactive employees marked for deletion flag set to Y or N, and the termination date to be used for selection if flag set to Y.

SPECIAL INSTRUCTIONS

None.

OUTPUT VALIDATION AND PRODUCT CHECKLIST

The following are outputs from this job.

Files Updated - NPS2-PAY-MASTER, NPS2-MER-FILE

Report 6050 - Update Pay Year-End Report

CA00021 Pay Year-End Reports

OPERATIONS OVERVIEW

This non-consolidated produces the pay year-end reports for printing to each Center. The specific steps performed are as follows.

Step 1 CSRS annual retirement summary produced

Step 2 FERS annual retirement summary produced

Step 3 CSRS account report produced

Step 4 FERS account report Produced

Step 5 Quarterly federal tax report produced

Step 6 LWOP hours reset

OPERATIONS OWNER/USER

Consolidated Payroll Office.

EXECUTION SCHEDULE

This job should be run after the last full pay period of the pay year in which employees receive payment and before the pay year-end update job (CA00020) is run. This job should only be scheduled and executed in conjunction with other pay year-end processes.

DATA INPUTS

Following are the inputs for this job.

DATA INPUTS

Following are the inputs for this job.

Year End Delete: inactive employee delete option Y or N, termination date to be used for selection if option Y chosen

CSRS and FERS account: sorting sequence of name or payblock and SSN or SSN or payblock and name (default equals payblock and SSN)

Tax withholding: whether FIT, FICA, or HIT (default equals FIT); sorting sequence of payblock and name or payblock and SSN (default equals payblock and SSN)

SPECIAL INSTRUCTIONS

None.

OUTPUT VALIDATION AND PRODUCT CHECKLIST

The following reports are produced.

Step 1 Report 416 – CSRS Annual Retirement Summary

Step 2 Report 417 – FERS Annual Retirement Summary

Step 3 Report 421 – CSRS Accounting

Step 4 Report 422 – FERS Accounting

Step 5 Report 415 – Quarterly Federal Tax Report

Step 6 Report 433 – LWOP SCD Hours Reset

CA00022 Create Year-End SSA Tape

OPERATIONS OVERVIEW

This non-consolidated job produces the Social Security Administration (SSA) tape from programs NAB6040, NAB6041, and NAB6042.

OPERATIONS OWNER/USER

Consolidated Payroll Office.

EXECUTION SCHEDULE

This job must be run after the last full pay period of the pay year in which employees receive payment and before the pay year-end update job (CA00020) is run. This job should only be scheduled and executed in conjunction with other pay year-end processes and is usually run out of a separate “year end” database.

DATA INPUTS

The input parameter for this job is the report year for the summary report (default should equal current year).

SPECIAL INSTRUCTIONS

None.

OUTPUT VALIDATION AND CHECKLIST

The following output is produced.

SSA Year-End Dataset and Tape

Report 508 - Social Security Tape - S Record Statistics

Personnel and Payroll Individual Reports

OPERATIONS OVERVIEW

Individual reports, as listed in Table C-4, are available as stand-alone on-request reports.

OPERATIONS OWNER/USER

The jobs beginning with a prefix of ‘CA’ may only be run by the Consolidated Payroll Office. Those with a prefix of ‘NA’ are available to the individual Center Payroll Offices. The prefix of ‘NE’ denotes Center Personnel Office reports.

EXECUTION SCHEDULE

The user may submit any of the reports based on personnel and payroll schedules.

DATA INPUTS

The input criteria for each report are shown in Table C-4. These parameters include both sort sequences and selection criteria for the reports.

SPECIAL INSTRUCTIONS

None.

OUTPUT VALIDATION AND PRODUCT CHECKLIST

Each job produces one report. The job numbers are listed in Table C-4.

* Available Consolidated, User inputs Centers.			
JOB NUMBER	**JOB NAME**	**WORK FILES**	**USER INPUT CRITERIA**
CA00100* Or NA00100	T&A Reported Hours	8, 25	Sort 1. Name 2. SSN Selection: Facility Code
CA00101 Or NA00101	Old vs New Normals	8, 5	Sort 1. Name 2. SSN Selection: Facility Code
CA00102* Or NA00102	Net Pay/Vol Allot Reg	1, 5, 8	Sort 1. Name 2. SSN Selection: Facility Code
CA00103* Or NA00103	Net Pay Register Non-Eft	1, 5, 8	Sort 1. Name 2. SSN Selection: Facility Code
CA00104* Or NA00104	Health Ins Not Paid	5, 8	Sort 1. Name & FEHB Code 2. SSN & FEHB Code Selection: Facility Code
CA00106* Or NA00106	Payroll Cash Awards	2, 1, 8	Sort 1. Name 2. SSN Selection: Facility Code
CA00107* Or NA00107	Limited Appt Employees	1, 8	Sort 1. Name 2. SSN
CA00108 Or NA00108	Annual Award History	1, 8	Sort 1. Name 2. SSN

* Available Consolidated, User inputs Centers.			
JOB NUMBER	**JOB NAME**	**WORK FILES**	**USER INPUT CRITERIA**
NA00109	Donated Annual Leave History	1, 8	Sort 1. Name 2. SSN Selection: Effective Year
CA00110 Or NA00110	Current Donated Leave	1, 8	Sort 1. Name 2. SSN
CA00111* Or NA00111	Permanent Change Of Station	1, 8	Sort 1. SSN 2. PB/SSN 3. Name
CA00112 Or NA00112	Mass CFC Suspense Reconciliation	8	None
CA00113 Or NA00113	Advance Pay Register	1, 8	Sort 1. Name 2. SSN Selection: Facility Code
CA00114 Or NA00114	ICB Associated Business Publications Report	1, 8	None
CA00115 Or NA00115	ICB Cash Awards Listing	1, 8	Sort 1. Case Number / Name 2. Case Number / SSN 3. Name 4. SSN
CA00116 Or NA00116	Cash Award Royalties	5, 8, 26	Selection: YTD or Cum
CA00117* Or NA00117	Non-Personnel Action Cash Awards Edit Listing	5, 8	None
CA00118* Or NA00118	Non-Personnel Action Cash Awards Master Listing	5, 8, 26	Sort 1. Name 2. SSN

* Available Consolidated, User inputs Centers.			
JOB NUMBER	**JOB NAME**	**WORK FILES**	**USER INPUT CRITERIA**
CA00119 Or NA00119	Time Off Award Register	5, 2, 8	Sort 1. SSN 2. Name 3. PB / SSN 4. PB / Name Selection: Facility Code
CA00200 Or NA00200	Master Employee Record	1, 2, 8	Sort A. Name B. SSN C. PB / Name D. PB / SSN Selection: Facility Code
CA00201* Or NA00201	IMFH Transactions	1, 8	Sort 1. Name 2. SSN Selection: Date
CA00202* Or NA00202	Payroll Register	1, 5, 8	Sort 1. Name 2. SSN Selection Facility Code, and 1. All Detail and Totals, or 2. Individual SSN, or 3. Individual Payblock, or 4. Individual Payblock Totals Only 5. Center Totals Only
CA00203* Or NA00203	Leave & Pay Proc Info	8	Sort 1. Name 2. SSN Selection: Facility Code
CA00204* Or NA00204	T&A Paid Hours	1, 8, 2	Sort 1. Name 2. SSN Selection: Facility Code
NA00250	TALC Adjustment	8	None

* Available Consolidated, User inputs Centers.			
JOB NUMBER	**JOB NAME**	**WORK FILES**	**USER INPUT CRITERIA**
CA00301* Or NA00301	Bond Status Register	5, 8	Sort 1. Name 2. PB/Name 3. PB/SSN 4. SSN Selection: Facility Code
CA00302* Or NA00302	Bond Enrollment Register	8, 25	Sort 1. Name 2. SSN Selection: Facility Code
CA00303 Or NA00303	Work Yrs & Personnel Costs	8	Selection: Date Range for Terminating Employees
CA00304 Or NA00304	FTE Work Year	8, 25	None
CA00305 Or NA00305	FTE Pay Status / Zero Hours	8, 25	None
CA00306 Or NA00306	FTE Accessions	8, 25	None
CA00307 Or NA00307	FTE Separations	8, 25	None
CA00309* Or NA00309	OT/CT/Credit Hour	1, 8	Sort 1. Name 2. SSN Selection: Facility Code
CA00310 Or NA00310	Overtime	8, 25	Selection Facility Code
CA00311 Or NA00311	Religious Comp Time	5, 8	Sort 1. Org / Name 2. PB / Name 3. PB / SSN

* Available Consolidated, User inputs Centers.			
JOB NUMBER	**JOB NAME**	**WORK FILES**	**USER INPUT CRITERIA**
CA0311R Or NA0311R	Regular Comp Time	5, 8	Sort 1. Org + Name 2. Payblock + Name 3. Payblock + SSN
CA00312 Or NA00312	Credit Hours	7, 8	None
CA00313 Or NA00313	FTE Status Change	8, 25	None
CA00314* Or NA00314	TSP Tape Report	1, 5, 6, 8	None
CA00315 Or NA00315	Leave Hour Status Report	8	Sort 1. Org Assign / SSN 2. Org Assign / Name 3. Name 4. SSN Selection Facility Code and 1. All Active Employees, or 2. Only Employees in a Use or Lose Status
CA00400 Or NA00400	Health Benefits Register	8, 25	Sort 1. Name 2. SSN
CA00401* Or NA00401	Union Dues	5, 8	None
CA00402* Or NA00402	Combined Fed Campaign Register	1, 5, 8	Sort 1. Name & CFC Code 2. SSN & CFC Code
CA00403* Or NA00403	SF2812 WTH/Cont FEHB, FEGLI	1, 8, 25	Sort 1. Name 2. SSN Selection: Facility Code
CA00404* Or NA00404	Bond Request Register	8, 15	Sort 1. Name 2. SSN

* Available Consolidated, User inputs Centers.			
JOB NUMBER	**JOB NAME**	**WORK FILES**	**USER INPUT CRITERIA**
CA00405 Or NA00405	Full Time Equiv	8, 25	None
CA00406* Or NA00406	SF1166 Voucher / Sch Of Pay	1 - 11	None
CA00408* Or NA00408	State / County / City Tax W/H	8, 25, 26, 27	Selection: State/County/City & Month/Qtr/Annual
CA00409*	SF1150 Record Of Leave	7, 8	Selection: Facility Code
CA00410* Or NA00410	Semi-Annual Headcount	8, 25	None
CA00411* Or NA00411	SF2807 Csrs Seps & Xfers	1, 8	None
CA00412* Or NA00412	SF3103 FERS Seps & Xfers	1, 8	None
CA00413*	SF2806 CSRS Ind'l Retire	8	None
CA00414*	SF3100 FERS Ind'l Retire	8	None
CA00415* Or NA00415	Fed W/H Tax – FIT / FICA / HIT	8, 25, 26	Sort 1. SSN 2. Name 3. PB & SSN 4. PB & Name Selection FIT, FICA, HIT
CA00416 Or NA00416	CSRS Annual Summ Ret Fund	8	None
CA00417 Or NA00417	FERS Annual Summ Ret Fund	8, 15	None

* Available Consolidated, User inputs Centers.			
JOB NUMBER	**JOB NAME**	**WORK FILES**	**USER INPUT CRITERIA**
CA00418* Or NA00418	W2 Wage and Tax	5, 8	<u>Sort</u> 1. Inst, Facility, Dtysts, Org Assn, Name 2. Active/Inactive, Org Assn, Name 3. State, Name 4. Zip, Name 5. T&A Dist, Code, Name 6. Dtysts, Org Assn, SSN 7. Dtysts, Org Assn, Empnbr 8. Inst, Payblock, SSN <u>Selection</u> 1. Term Employees 2. All Employees or Single SSN 3. Totals Pages Only (CPO option)
CA00419 Or NA00419	W-2 Checklist	5, 6, 8	<u>Sort</u> 1. SSN 2. Name 3. PB + SSN 4. PB + Name
CA00420* Or NA00420	Biweekly Retirement	5, 8	<u>Sort</u> 1. PB + SSN 2. SSN 3. Name 4. PB + Name
CA00421 Or NA00421	CSRS Accounting	5, 8	<u>Sort</u> 1. Name 2. PB + SSN 3. SSN 4. PB + Name
CA00422 Or NA00422	FERS Accounting	5, 8	<u>Sort</u> 1. Name 2. PB + SSN 3. SSN 4. PB + Name

* Available Consolidated, User inputs Centers.			
JOB NUMBER	**JOB NAME**	**WORK FILES**	**USER INPUT CRITERIA**
CA00423 Or NA00423	Individual Pay Record Report	5, 8	Sort 1. Name 2. SSN PB + Name 3. PB + SSN Selection Report Year, SSN if single emp.
CA00424 Or NA00424	Year-End Leave Report	8, 25	Sort 1. SSN 2. Name 3. Payblock + SSN 4. Payblock + Name Selection Report Year, SSN if single emp.
CA00425 Or NA00425	Bond Semiannual Report	1, 8	Sort 1. Name SSN Selection: Facility Code
CA00426 Or NA00426	Annual Leave Liability & Other Leave Hr Balances	5, 8	Sort 1. Payblock + SSN 2. SSN 3. Name Selection: PB Totals or Center Totals or Full Report
CA00427 Or NA00427	IRS Form 1099-Misc	5, 8	None

* Available Consolidated, User inputs Centers.			
JOB NUMBER	**JOB NAME**	**WORK FILES**	**USER INPUT CRITERIA**
CA00428 Or NA00428	Posting List For ACI and Locality Pay Actions	2, 8	Sort 1. Payblock + Retirement Plan + Name + NOAC 2. Payblock + Retirement Plan + SSN + NOAC 3. Retirement Plan + Name + NOAC 4. Retirement Plan + SSN + NOAC Selection Optional – Effective Date
CA00456* Or NA00456	NEBA Biweekly Summary	1, 2, 8	Sort 1. Name 2. SSN Selection: PPE Date
NA00500	Non-EFT Tape Listing	1, 5, 8	Sort 1. Name 2. SSN
CA00502 Or NA00502	Security Violations	8	Selection Date
NA00505	Gains and Losses	5, 8	None
CA00508*	Social Security Tape-S Records Statistics	1, 2, 3, 8	Selection Date
CA05101* Or NA00510	MER Tables Dump	1, 8	Selection Facility Code
NA5101B	T&A IMFH Dump	1, 8	Selection Facility Code
CA00518* Or NA00518	W2 Wage and Tax Non-NPPS	5, 8	Sort 1. Name 2. SSN

* Available Consolidated, User inputs Centers.			
JOB NUMBER	**JOB NAME**	**WORK FILES**	**USER INPUT CRITERIA**
CA00555	Leave and Earnings Statement Generation {Any Employee With a Gross, Net, or Personnel Award Amount GT 0}	1, 2, 8	<u>Sort</u> ORG Assigned by Name 1. ORG Detailed/Located/ Assigned by Name 2. T&A Code by Name 3. T&A Code/ ORG Located/ ORG Assigned by Name 4. Name Only 5. ORG Located/ORG Assigned by Name <u>Selection</u> • Remarks • Web Address
NA00556	Leave and Earnings Statement Full Print	8	None
NA00557	Leave and Earnings Statement Re-Print	1, 2, 8	<u>Selection</u> • Selected Employees or Sequence Numbers from CA00555 dataset • Pay Period Ending Date
CA00818* Or NA00818	Fund Source 1 Report	8	<u>Selection</u> • FTE YTD or Current Pay Period • CSRS, or FERS, or exclude CSRS & FERS, or All Emp's • Specific Organizations
CA05010	Administrative Transaction Report	1, 8	<u>Sort</u> 1. Name 2. SSN <u>Selection:</u> Date
NA06090	EFT Tape Listing	1, 5, 6, 8	None
NE00154	Employee Service Record	5, 8	<u>Selection</u> • All Active Emp's or an SSN or by Separation Date Range • Facility Code
NE00250	Probationary Appraisal	8, 25	<u>Selection</u> Beg and End Dates

* Available Consolidated, User inputs Centers.			
JOB NUMBER	**JOB NAME**	**WORK FILES**	**USER INPUT CRITERIA**
NE00251	Within Grade Increase	8, 23	Selection Beg and End Dates
NE00252	Retention Register	5, 8, 6	Selections: • RIF Cutoff Date • RIF Effective Date • Sort by Name or SSN • Facility Code • Single Agency Code • If 2nd Installation - Code • All Active or by NCC or by Org. Assigned or by Occupational Code or by Competitive Area
NE00255	Retention Register Lite	5, 8	Selections: • RIF Cutoff Date • RIF Effective Date • Sort by Name or SSN • Facility Code • Single Agency Code • If 2nd Installation - Code • All Active or by NCC or by Org. Assigned or by Occupational Code or by Competitive Area
NE00350	Basic Personnel Data	5, 8	Sort 1. Name 2. SSN Selection: Facility Code
NE00351	Personnel Register	1, 8	Selection Facility Code
NE00352	Installation Strength	8	None
NE00353	Personnel Statistics	8, 10, 15, 25	Sort 1. Org 2. NCC 3. Pay Plan
NE00354	Freedom Of Info Listing	5,8	Sort 1. Name 2. Org Assigned

* Available Consolidated, User inputs Centers.			
JOB NUMBER	**JOB NAME**	**WORK FILES**	**USER INPUT CRITERIA**
NE00355	Statement Of Benefits CSRS	2, 8	Selection • Facility Code • SSN and SCD: Leave Date • Processing Date
NE00364	Full Tables	8	Selection All Personnel, All Payroll, All Appendix, All Control Tables or Select by Individual Table
NE00365	Suspense (Tickler)	5, 8	Selection Beginning Date, Facility Code
NE00367	Statement Of Benefits FERS	2, 8	Selection • Facility Code • SSN and SCD: Leave Date • Processing Date
NE00369	Supervisory Prob Appraisal	8,25	Selection Beg and End Dates
NE00371	Incentive Annual Awards	1, 8	Selection Beg and End Dates
NE00372	SES Probationary Appraisal	8, 25	Selection Beg and End Dates
NE00373	Personal Data Verification	8	Sort 1. Name 2. Org Assigned, Name
NE00460	CAPPS Status Data Report	8	None
NP000DG	Print Data Glossary	1, 8	None

Table C-4 Single Report Jobs

CPO Unique Jobs

JOB NUMBER	JOB NAME – FUNCTION	WORK FILES	USER INPUT CRITERIA	UNIQUE MODULES
CABWAJ4	CPO Biweekly After Job 4 String of Reports	Various per Rpts	Various per Reports	N/A
CABWMS4	CPO-MSFC BiWeekly After Job 4 String of Reports	Various per Rpts	Various per Reports	N/A
CA0H328	HQ Only – FAST Tape Generation Pgm	1, 2, 8, 25	None	RNF328RA
CA0H406	HQ Only – SF1166 Voucher Report	1-11	None	RFN406 series
CALEBLK	L&E Reprint w/o Overlay to CPO Ptr	1, 2, 8	Selection • Selected Emp's or Sequence #s from CA00555 dataset • Pay Period Ending Date	N/A
CAW2LTR	W2 Address Letters	5, 8	None	AGPMAIL
CA0020B	CPO 201 Report with no Batch Transactions	1, 8	Sort 1. Name 2. SSN Selection: Date & Centers Chosen	AGB201
CA00513	SF2806 CSRS Retirement Card	8	Selection 1. Only separating employees 2. All employees 3. By single SSN	AGB513
CA00514	SF3100 FERS Retirement Card	8	Selection 1. Only separating employees 2. All employees 3. By single SSN	AGB514
CA418W2	Print of Single W2 to CPO Ptr - plain paper	5, 8	Employee SSN	N/A
NABWAJ1	Center specific BiWeekly After Job 1 String of Reports	Various per Reports	Various per Reports	N/A

JOB NUMBER	JOB NAME – FUNCTION	WORK FILES	USER INPUT CRITERIA	UNIQUE MODULES
NABWAJ3	Center specific BiWeekly After Job 3 String of Reports	Various per Reports	Various per Reports	N/A
NABWAJ5	Center specific BiWeekly After Job 5 String of Reports	Various per Reports	Various per Reports	N/A
NABWCPY	Center specific BiWeekly copy of Datasets to TSP	Various	None	N/A
NAPR557	Old L&E Reprint Option (old form)	1, 2, 8	Selection • Selected Emp's or Sequence #s from CA00555 dataset • Pay Period Ending Date	AGB557
NAQR423	Quarterly Individual Pay Record Report-all	5, 8	Sort 1. Name 2. SSN 3. PB + Name 4. PB + SSN Selection Report Year, SSN if single emp.	N/A

External Interfaces

JOB NUMBER	JOB NAME – OUTPUT	INTERFACE LOCATION OR APPLICATION	TRANSMISSION VIA
CAEE001 CAEE014 **	Daily Employee Express – Transaction Dataset	From OPM, Macon, GA	FTP of Datasets
CAEE002 **	Biweekly Employee Express–Extract Dataset	To OPM, Macon, GA	FTP of Dataset
CA00022*	SSA YearEnd Tape Creation – Datasets and Tapes to Deliver	Social Security Administration	Fed-Ex Tape Cartridge
CA00027*	AdminStar – Datasets	CAPPS Application	NAPROD
CA00045*	California Quarterly Tax – Round Reel tape	State of California	Federal Express
NAPROD1	Transmission of EFT/Non-EFT Datasets	US Treasury - Austin, TX – w/in 1 hr. Control Rpts sent to NAPROD	NDM
NAPROD2	Transmission of Bonds Dataset	Regional Finance Ctr, Pittsburgh, PA	NDM
NAPROD3	Submission of NECAPP1/NECAPP2	CAPPS Application	NAPROD
NAPROD4	Transmission of TSP Dataset	National Finance Ctr, New Orleans, LA	NDM
NAPROD5	Transmission of NEBA Dataset	Anthem Health, NJ	Fed-Ex Round Reel Tape
NAPRO25	Transmission of Biweekly New Hire Dataset from CA00004 or CA00025	SSA, Dept. of HHS – w/in 48 hrs – Error Files are returned to NAPROD	NDM
NAPRO26	Transmission of Quarterly Wage Dataset from CA00026	SSA, Dept. of HHS - w/in 48 hrs – Error Files are returned to NAPROD	NDM
NAPRO45	Re-Transmission of Quarterly CA Tax	State of California	Fed-Ex of Round Reel Tape
NECAPP1*	Biweekly CAPPS Datasets	CAPPS Application	NAPROD
NECAPP2*	Monthly CAPPS Datasets	CAPPS Application	NAPROD
NECAPP3*	Quarterly CAPPS Datasets	CAPPS Application	NAPROD
NECAPP4*	Fiscal Year CAPPS Datasets	CAPPS Application	NAPROD

*** See Separate Section in this Appendix.**

**** See Employee Express ICD.**

Auto Schedule Job

OPERATIONS OVERVIEW

This job will run daily to check execution dates on the jobs marked for Auto schedule and set their BJS status to "H" if the current date is matched in their execution calendar. The job will also delete and print BJS log messages more than two days old and print a report of the Job and Report data. This job may be used to create the 40 execution dates whenever the Job records are reloaded.

OPERATIONS OWNER/USER

To be supplied by the receiving installation.

EXECUTION SCHEDULE

The job must be started during the afternoon so that PC can review the list of jobs in "H" status and change them to "S" as needed.

DATA INPUTS

None.

SPECIAL INSTRUCTIONS

If some reports are not desired, change the JCL to skip them.

OUTPUT VALIDATION AND PRODUCT CHECKLIST

The following reports are produced.

List of all BJS log messages deleted.

List of all jobs set to Hold in the BJS queue.

List of all report recipient data.

List of all jobs set for Auto schedule and their 40 execution dates.

THIS PAGE INTENTIONALLY LEFT BLANK.

Appendix D
INDEX BY JOB TASK

INDEX BY JOB TASK

This section provides an index of the contents of Section 4.0, Online/Interactive Capabilities, and Section 5.0, Batch User Capabilities. Not only is this section more detailed than the Table of Contents, but it categorizes the tasks in the logical groupings used by the professionals who perform personnel processing, payroll processing, and application administration.

TASK GROUP	TASK	Section
Adjustments - Accumulations		4.2.2.2
	Annual Leave	4.2.2.2.8
	Appointment Limitations	4.2.2.2.28
	Compensatory Time	4.2.2.2.9
	Continuation of Pay Leave	4.2.2.2.15
	Credit Hours	4.2.2.2.11
	Donated Annual Leave	4.2.2.2.16
	Former City and County Taxes	4.2.2.2.22
	Former State Taxes	4.2.2.2.21
	Home Leave	4.2.2.2.17
	Leave Without Pay Hours	4.2.2.2.12
	Other Leave Used YTD	4.2.2.2.18
	Religious Compensatory Time	4.2.2.2.10
	Restored Leave	4.2.2.2.13
	Sick Leave	4.2.2.2.14
	YTD Deductions	4.2.2.2.25
	YTD Deductions TSP	4.2.2.2.27
	YTD Earnings and Premium Hours Worked	4.2.2.2.23
	YTD Leave Cost	4.2.2.2.24

TASK GROUP	TASK	Section
Adjustments - Current Pay Period Earnings		4.2.2.2
	COLA and Foreign Differential	4.2.2.2.2
	Current TSP Adjustments	4.2.2.2.3
	Earnings and Refunds Adjustments	4.2.2.2.1
	Employee Insurance Adjustments	4.2.2.2.4
	Lump Sum Leave/Reactivations	4.2.2.2.6
	Other Deductions Adjustments	4.2.2.2.5
	PCS Travel Adjustments B/W	4.2.2.2.7
	Ad Hoc Reporting (SUPER NATURAL)	4.3.1.5
Administrative - Payroll		4.2.2.4
	CFC Mass Deductions	4.2.2.4.5
	Employee Mailing Address and Net Pay	4.2.2.4.2
	Employee T&A Distribution	4.2.2.4.1
	Global Transactions, Financial Institution	4.2.2.4.9
	Global Transactions, T&A Distribution Code	4.2.2.4.10
	Mass Donated Leave	4.2.2.4.8
	New Payblock Mass Update	4.2.2.4.7
	Payroll Suspense Maintenance Query	4.2.2.4.4
	Spousal Health Benefits	4.2.2.4.3
	T&A Distribution Mass	4.2.2.4.6
Annual Comparability Increase (ACI)		4.1.5.3
	ACI Processing	4.1.5.4

TASK GROUP	TASK	Section
Batch Job Maintenance		5.2
	JCL Catalog	5.2.1.3
	Job Directory	5.2.1.4
	Print Directory	5.2.1.1
	Report Directory	5.2.1.2
Batch Job Scheduler		5.1
	Job Startup	5.1.1.4
	Job Status	5.1.1.3
	Process Schedule List	5.1.1.1
	Report Schedule List	5.1.1.2
Control Actions		4.2.2.3
	Awards Control	4.2.2.3.3
	Bonds Controls	4.2.2.3.7
	New Employee List	4.2.2.3.9
	Old Versus New Normals	4.2.2.3.1
	Pay Period History	4.2.2.3.12
	Pay Period History Query	4.2.2.3.11
	Pay Period YTD Adjustments	4.2.2.3.4
	Payroll Register	4.2.2.3.5
	Personnel Data	4.2.2.3.8
	Savings Allotment Summary	4.2.2.3.6
	Terminated Employee List	4.2.2.3.10
	Tour of Duty Normals	4.2.2.3.11
Deductions - Mandatory		4.2.2.1
	Bankruptcy Payments	4.2.2.1.10
	Child Support Payments	4.2.2.1.12
	City and County Taxes	4.2.2.1.9
	Federal and State Taxes	4.2.2.1.8
	Indebtedness to the US Government	4.2.2.1.11

TASK GROUP	TASK	Section
Deductions - Voluntary		4.2.2.1
	Bond Deductions	4.2.2.1.3
	Military Deposit Deductions	4.2.2.1.5
	Miscellaneous Voluntary Deductions	4.2.2.1.6
	NEBA Life Insurance	4.2.2.1.4
	Thrift Savings Plan Deductions	4.2.2.1.7
	TSP Loan Repayment Allotments	4.2.2.1.2
	Voluntary Savings Allotment	4.2.2.1.1
Employee Service Record		4.1.6.18
Help Maintenance		4.3.1.4
History Maintenance - Personnel		4.1.7
Mass Actions - Personnel		4.1.6
	Change in FEHB	4.1.6.12
	Change in NASA Class Code	4.1.6.11
	Change in Organization Name	4.1.6.10
	Extension of Furlough	4.1.6.5
	Furlough	4.1.6.3
	Furlough Not-to-Exceed	4.1.6.2
	Mass Transfer	4.1.6.1
	Military Furlough	4.1.6.4
	Performance Rating	4.1.6.9
	Realignment	4.1.6.6
Mature Personnel		4.1.3
Personnel Actions		4.1
	Mass Deletion of Suspense Actions	4.1.1.4
	Personnel Actions Processing	4.1.1.1 4.1.1.5
	Query Suspense File	4.1.1.3
	View Master Records	4.1.1.2

TASK GROUP	TASK	Section
Planning Actions		4.1.2
Processing Controls		4.3.1.3
	Payroll Processing Controls	4.3.1.3.1
	Personnel Processing Controls	4.3.1.3.2
Security Maintenance		4.3.1.1
SF 50 Process		4.1.4 4.1.1.1
Table Processing		
	Command Table	4.3.1.2.1
	Installation Name Table	4.3.1.3.3
	Payroll Tables	4.2.4
	Personnel Tables	4.1.5
	Relational Edits Table	4.3.1.2.2
Time and Attendance		4.2.3.1
	Pay Record/T&A Edit	4.2.3.1.1
	Payroll Register	4.2.2.3.5
	T&A Reported Hours	4.2.3.1.2
Vouchering		4.2.3.2
	Accounting Breakouts	4.2.3.2.4
	Register Totals	4.2.3.2.3
	SF 1166 Chain	4.2.3.2.2
	Voucher Chain	4.2.3.2.1

THIS PAGE INTENTIONALLY LEFT BLANK.

Appendix F
BATCH JOB PARAMETER INPUT SCREENS

BATCH JOB PARAMETER INPUT SCREENS

NEO252 Retention Register Parm Screens

```
                          NPPS BATCH JOB SCHEDULER
NEO252P                    RETENTION REGISTER PARM
      ---------------------------------------------------------------------
        RIF CUTOFF DATE:  ___A____        RIF EFFECTIVE DATE:  ___B____
                         (MMDDYYYY)                          (MMDDYYYY)
  TO SELECT SORT OF ACCOMPANYING REPORTS 252A/B:  C    1(NAME) OR 2(SSN)
  TO SELECT A FACILITY, ENTER THE FACILITY CODE:  D    OTHERWISE LEAVE BLANK
  TO  SELECT  A  SINGLE  AGENCY  ENTER ITS CODE:  _E__ OTHERWISE LEAVE BLANK
  TO SELECT SECOND INSTALLATION ENTER ITS CODE :  _F__ OTHERWISE LEAVE BLANK

                       ENTER SELECTION CRITERIA:
                         1 - ACTIVE EMPLOYEES
                         2 - NASA CLASS CODE
                         3 - ORGANIZATION ASSIGNED CODE
                         4 - OCCUPATIONAL CODE
                         5 - COMPETITIVE AREA

                            SELECTION  G
  SEARCH CODE VALUE  __H__ (TO BE USED FOR SELECTIONS 2, 3, 4, OR 5 ABOVE)
-------------------------------------------------------------------------------
                            PF1= HELP     PF3= CANCEL
```

(Screen 1 of 2)

DESCRIPTION

This parameter screen is used to identify the selection criteria and sort sequence for the Retention Register and accompanying reports.

A. Required. This parameter establishes the cutoff date for inclusion of performance ratings, i.e. performance ratings made effective following this date will not be considered for RIF purposes.

B. Required. This parameter establishes the date the RIF will be effective and is the cutoff date for Tenure, i.e. any tenure completion date greater than this date will not change the employee's tenure for RIF purposes.

C. Required. This parameter is used to specify the sort sequence for reports 252A, Listing of Temporary Promotions, and 252B, Listing of Employees Restored After Military Service, that accompany the Retention Register report.

D. This parameter is used to limit the report to a specific facility. Facility is not allowed if a second installation is requested. The facility code entered must be found in table TFACILTY.

E. This parameter is used to limit the report to a single agency.

F. This parameter is used to identify an additional installation to be included on the report. The installation code entered must be found in table TINSTALL.

G. Required. This parameter is used to specify additional selection criteria.

H. Required if selection 2, 3, 4, or 5 is chosen for parameter F. This parameter is used to identify the specific value to be used for selections 2, 3, 4, and 5.

```
                         NPPS BATCH JOB SCHEDULER
NEO252A                  RETENTION REGISTER PARM
      ---------------------------------------------------------------------
              SELECT THE DESIRED SORT SEQUENCE FOR REPORTS 252/252C:

      1 - COMP AREA, POS OCC, PAY PLAN, GRADE, SUPV GRP, NCC, COMP LVL,
          WRK SCH, TEN GRP, VET GRP, ADJ FSCD

      2 - COMP AREA, POS OCC, WRK SCH, GRADE, COMP LVL, TEN GRP, VET GRP,
          ADJ FSCD, NAME

                            SELECTION:    A

                 SELECT THE DESIRED SORT SEQUENCE FOR REPORT 252D:

                          1 - COMP AREA, POS OCC, NAME
                          2 - COMP AREA, POS OCC, SSN

                               SELECTION:   B
---------------------------------------------------------------------------
                           PF1= HELP     PF3= CANCEL
```

(Screen 2 of 2)

DESCRIPTION

This parameter screen is used to identify the sort sequence for the Retention Register and accompanying reports.

A. Required. This parameter is used to specify the sort sequence for reports 252, Retention Register, and 252C, Retention Register Tenure Equal Zero.

B. Required. This parameter is used to specify the sort sequence for report 252D, Listing of Temporary Promotions.

NEO255 Retention Register Lite Parm Screen

```
                          NPPS BATCH JOB SCHEDULER
NEO255P                 RETENTION REGISTER LITE PARM
      ---------------------------------------------------------------------------
        RIF CUTOFF DATE:  ___A____        RIF EFFECTIVE DATE:  ___B____
                         (MMDDYYYY)                          (MMDDYYYY)

  TO SELECT A FACILITY, ENTER THE FACILITY CODE:  C    OTHERWISE LEAVE BLANK
  TO  SELECT  A  SINGLE  AGENCY  ENTER ITS CODE:  _D__ OTHERWISE LEAVE BLANK
  TO SELECT SECOND INSTALLATION ENTER ITS CODE :  _E__ OTHERWISE LEAVE BLANK

                       ENTER SELECTION CRITERIA:
                         1 - ACTIVE EMPLOYEES
                         2 - NASA CLASS CODE
                         3 - ORGANIZATION ASSIGNED CODE
                         4 - OCCUPATIONAL CODE
                         5 - COMPETITIVE AREA

                            SELECTION  F
  SEARCH CODE VALUE  __G__ (TO BE USED FOR SELECTIONS 2, 3, 4, OR 5 ABOVE)
-------------------------------------------------------------------------------
                            PF1= HELP     PF3= CANCEL
```

(Screen 1 of 2)

DESCRIPTION

This parameter screen is used to identify the selection criteria for the Retention Register Lite.

A. Required. This parameter establishes the cutoff date for inclusion of performance ratings, i.e. performance ratings made effective following this date will not be considered for RIF purposes.

B. Required. This parameter establishes the date the RIF will be effective and is the cutoff date for Tenure, i.e. any tenure completion date greater than this date will not change the employee's tenure for RIF purposes.

C. This parameter is used to limit the report to a specific facility. Facility is not allowed if a second installation is requested. The Facility code entered must be found in table TFACILTY.

D. This parameter is used to limit the report to a single agency.

E. This parameter is used to identify an additional installation to be included on the report. The installation code entered must be found in table TINSTALL.

F. Required. This parameter is used to specify additional selection criteria.

G. Required if selection 2, 3, or 4 is chosen for parameter F. This parameter is used to identify the specific value to be used for selections 2, 3, and 4.

```
                          NPPS BATCH JOB SCHEDULER
NEO255A                 RETENTION REGISTER LITE PARM
      ---------------------------------------------------------------------------
                  SELECT THE DESIRED SORT SEQUENCE FOR REPORT 255

         1 - COMP AREA, PAY PLAN, OCC CODE, GRADE, COMP LVL, NCC,
             WRK SCH, SUPV GRP, TEN GRP, VET GRP, ADJ FSCD

         2 - COMP AREA, POS OCC, WRK SCH, GRADE, COMP LVL, TEN GRP,
             VET GRP, ADJ FSCD, NAME


                              SELECTION   A





---------------------------------------------------------------------------
                            PF1= HELP     PF3= CANCEL
```

(Screen 2 of 2)

DESCRIPTION

This parameter screen is used to identify the sort sequence for the Retention Register Lite.

A. Required. This parameter is used to specify the sort sequence for report 255, Retention Register Lite.

CPO Batch Job Parameter Input Screen

```
                          NPPS BATCH JOB SCHEDULER
NPO950PA                  SELECT CPO INSTALLATIONS
      ---------------------------------------------------------------------
                           PLEASE MARK THE CENTERS
                               TO BE PROCESSED
                                  _ 1000
                                  _ 2100
                                  _ 2200
                                  _ 2300
                                  _ 2400
                                  _ 5100
                                  _ 6200
                                  _ 6400
                                  _ 7200
                                  _ 7600
-------------------------------------------------------------------------------
                             PF1= HELP     PF3= CANCEL
```

CPO Center Selection Screen

DESCRIPTION

This parameter screen is used to identify CENTERS to be included in the execution of a batch process or to be included in the execution of one or more reports. At least one center must be selected. All centers desired to be included in the batch run being scheduled must be selected. A center is selected by entering a non-blank character into the input field to the left of the four-character CENTER identification code.

All parameters selected for a consolidated batch job will be assigned to every center selected for execution from this CENTER selection parameter screen.

NE00400/NE00410 SF50/SF52 Notification of Personnel Actions

```
COMMAND: ______            NPPS BATCH JOB SCHEDULER
NPO4120                 PROCESS SCHEDULE LIST - BJSJOB
  ---------------------------------------------------------------------
    CHECK
    ONE      JOB TITLE         JOB NO   FREQUENCY         SEQUENCE
    ( _ )    CAPPS MONTHLY SUBMISSION   NECAPP2  ON REQUEST        410
    ( _ )    CAPPS QTRLY   SUBMISSION   NECAPP3  ON REQUEST        415
    ( _ )    CAPPS EOFY    SUBMISSION   NECAPP4  ON REQUEST        420
    ( _ )    LWOP REPORT       NE00001  ON REQUEST        360
    ( _ )    MATURE REPORTS    NE00002  ON REQUEST        370
    ( _ )    DAILY   REPORTS   NE00003  DAILY    380
    ( _ )    TSP LETTER        NE00004  ON REQUEST        361
    ( _ )    BATCH MATURE      NE00008  ON REQUEST        330
    ( _ )    APPR ACT NOT REG 50        NE00010  ON REQUEST        191
    ( _ )    MASTER TIME RECALCULATION  NE00096  ON REQUEST        350
    ( _ )    SYSTEM INTERFACE ERRORS    NE00366  ON REQUEST        310
    ( _ )    SF50 NOTIFI PER ACTION     NE00400  ON REQUEST        420
-------------------------------------------------------------------------------
CHECK ONE: S-TO SCHEDULE A JOB   R-TO RESTART A JOB  H-TO PUT A JOB IN HOLD
PF1= HELP       PF3= PREV SCREEN        PF5= MAIN MENU       PF7= BACKWARD
PF8= FORWARD    PF12= END
```

Process Schedule List - BJSJOB

Select SF50 NOTIFI PER ACTION or SF52 NOTIFI PER ACTION Jobs by placing an “S” in the Check One Column on the left.

```
 ENTER 'Y' TO UPDATE DEFAULT RECIPIENT LIST y
THIS JOB IS LABELED NE00400A PRESS RETURN TO CONTINUE
NPO4120                PROCESS SCHEDULE LIST - BJSJOB
  ARXB  ---------------------------------------------------------------
  CHECK
   ONE      JOB TITLE                      JOB NO       FREQUENCY    SEQUENCE

  ( _ )     CAPPS MONTHLY  SUBMISSION      NECAPP2      ON REQUEST      410
  ( _ )     CAPPS QTRLY    SUBMISSION      NECAPP3      ON REQUEST      415
  ( _ )     CAPPS EOFY     SUBMISSION      NECAPP4      ON REQUEST      420
  ( _ )     LWOP REPORT                    NE00001      ON REQUEST      360
  ( _ )     MATURE REPORTS                 NE00002      ON REQUEST      370
  ( _ )     DAILY   REPORTS                NE00003      DAILY           380
  ( _ )     TSP LETTER                     NE00004      ON REQUEST      361
  ( _ )     BATCH MATURE                   NE00008      ON REQUEST      330
  ( _ )     APPR ACT NOT REG 50            NE00010      ON REQUEST      191
  ( _ )     MASTER TIME RECALCULATION      NE00096      ON REQUEST      350
  ( _ )     SYSTEM INTERFACE ERRORS        NE00366      ON REQUEST      310
  ( _ )     SF50 NOTIFI PER ACTION         NE00400      ON REQUEST      420
-------------------------------------------------------------------------------
CHECK ONE: S-TO SCHEDULE A JOB   R-TO RESTART A JOB  H-TO PUT A JOB IN HOLD
PF1= HELP       PF3= PREV SCREEN        PF5= MAIN MENU       PF7= BACKWARD
PF8= FORWARD    PF12= END
```

Default Recipient List

Enter "Y" to update the DEFAULT RECIPIENT LIST

```
                           NPPS BATCH JOB SCHEDULER
NP04190                 REPORT DIRECTORY RECIPIENT LIST
 ---------------------------------------------------------------------
  REPORT NO.          JOB NO.             JOB TITLE
   150       NE00400         SF50 NOTIFI PER ACTI
  REPORT TITLE   150   SF 50 NOTIFICATION OF PERSONNEL ACTION

  PRINT OUTPUT TYPE (H/T/S/B/K) H               PRINT OUTPUT ID:   xerox____
                                          PRINTER NODE:   ________
-----------------------  R E C I P I E N T  ----------------------------
    NAME     ADDRESS  COPIES   ASSEMBLY INSTRUCTIONS

    REGRESSION_____   ISC 3RD FLA____   1_       RB   PR_______________________
    _______________   _______________   __       ______________________________
    _______________   _______________   __       ______________________________
    _______________   _______________   __       ______________________________
    _______________   _______________   __       ______________________________
    _______________   _______________   __       ______________________________
    ---------------------------------------------------------------------------
--- PF1= HELP         PF3= CANCEL       PF7= SCROLL UP    PF8= SCROLL DOWN
```

Report Directory Recipient List

Enter the print destination under the PRINTER OUTPUT ID and make any other necessary changes.

```
                          NPPS BATCH JOB SCHEDULER
NE0400P                     SF50 PRINT SELECTION
 ARXB ---------------------------------------------------------------------
(X OR BLANK)
    __       ALL THAT HAVE NOT BEEN PRINTED
    __       ALL WITH FACILITY    __
    __       ALL WITH CLERK ID  ____________
    __       ALL WITH EFDATES  00 00 00 THRU 00 00 00
    __       ALL WITH THESE NOAC'S  _____ , _____ , _____ , _____
                                    _____ , _____ , _____ , _____
    __       ALL FOR THESE SSN'S  ___ __ ____ , ___ __ ____ , ___ __ ____
                                   ___ __ ____ , ___ __ ____ , ___ __ ____
-------------------------------------------------------------------------------
             XEROX COPIES  3
    __       ALIGHNMENT PRINTING
    __       DISREGARD PRINT FLAG FOR SELECTION
    __       DO NOT SET PRINT FLAG
   ___       SELECT THIS NUMBER AND STOP
    __       REPORT LAST SET
-------------------------------------------------------------------------------
                              PF1= HELP     F3= CANCEL
```

SF50/SF52 Print Selection

DESCRIPTION

The SF50/SF52 Print Parameter screen is used to print the SF50/SF52 Notification of Personnel Action for any employee transaction requiring an OPM/NOAC. Eleven options are displayed on this screen. The options are divided into two groups and the groups are separated by a dotted line. An option is selected by placing an X in the blank to the left of the option.

The first group of options allows you to specify which SF50/SF52 should be printed. You may select one of the following: All Not Printed, All with Efdates (beginning date) Through (ending date), All with these NOACs (specify a maximum of eight NOACs), All for these SSNs (specify a maximum of six SSNs), All with facility, or All with Clerk ID. If you select one of these options alone, the system will print the SF50/SF52 <u>which have not already been printed</u>.

You may select one or more of the options in the second group in order to further define the set of SF50s/SF52s you want to print. To print five alignment SF50s/SF52s before your selected SF50s/SF52s, select the Alignment option. To reprint SF50s/SF52s which have already been printed, you may select the Disregard Print Flag for Selection option. If you are executing a trial print, you may select Do Not Set Print Flag. To preview a select number of SF50s/SF52s before printing a large group, type the number of SF50s/SF52s to be printed in the blank to the left of the Select This Number and Stop option. To reprint exactly the group of SF50s/SF52s selected for the last printing, choose Reprint Last Set. You may use a combination of selections with the one exception of "Reprint Last Set." This option should be selected by itself only. All SF50s/SF52s will go to the default printer destination. <u>If your default printer for this job is a SF50 Xerox printer, then the Xerox copies will be defaulted at 3</u>

copies. If your default printer for this job is a SF52 Xerox printer, then the Xerox copies will be defaulted at 1 copy.

Three other SF50/SF52 print items are available during personnel action processing at the Remarks screen. The first item is Combined 50. If you enter Y in this field, NPPS prints a dual SF50 (i.e., two separate actions on the same SF50) when an employee has two or more personnel actions with the same effective date and they are sequenced first and second for that day. If you leave this field blank, NPPS prints only a single SF50 for this action. The second item, SF50/SF52 Print Status, displays “P” if an SF50/SF52 has been printed for this action. This “P” represents the Print Flag previously mentioned.

NPPS determines whether or not an SF50/SF52 is required for each action as defined in the table TNOAC. However, you may choose to make this determination yourself using the Required SF50/SF52 field. This is the third SF50/SF52 print item on the SF50/SF52 Remarks screen. Type N in the blank following this item if an SF50/SF52 is not required for this action; otherwise, leave the item blank.

THIS PAGE INTENTIONALLY LEFT BLANK.

Appendix G
ABBREVIATIONS AND ACRONYMS

ABBREVIATIONS AND ACRONYMS

Abbreviation / Acronym	Description
ACI	Annual Comparability Increase
AIM	Automated Information Management
BJM	Batch Job Maintenance
BJS	Batch Job Scheduler
B/W	Biweekly
CAO	Change of Appointing Office
CAPPS	Consolidated Agency Personnel/Payroll System
Cd	Code
CFC	Combined Federal Campaign
COLA	Cost of Living Allowance
COP	Continuation of Pay
COR	Correction Action Code
CPO	Consolidated Payroll Office
CSRS	Civil Service Retirement System
CT	Compensatory Time
DID	Data Item Description
EFT	Electronic Funds Transfer
EIC	Earned Income Credit
EIN	Employer Identification Number
FEGLI	Federal Employee Group Life Insurance
FEHB	Federal Employee Health Benefits
FERS	Federal Employees Retirement System
FICA	Federal Insurance Contribution Act
FLSA	Fair Labor Standards Act
FPM	Federal Personnel Manual
FTE	Full-Time Equivalent
GM	General Merit
GS	General Schedule
HIT	Hospital Insurance Tax
HQ	NASA Headquarters
ID	Identification
ICB	Inventions and Contributions Board
IGA	Interim Geographic Adjustment
JCL	Job Control Language
JES	Job Entry Subsystem
JSC	Johnson Space Center
LEQD	Last Pay Increase Date
LWOP	Leave Without Pay
MER	Master Employee Record

Abbreviation / Acronym	Description
Mil	Military
MPORG	Merit Pay Organization
MTD	month-to-date
MVS	Multiple Virtual Storage
NASA	National Aeronautics and Space Administration
NCC	NASA Classification Code
NEBA	NASA Employee's Benefit Association
NMI	NASA Management Instructions
NOAC	Nature of Action Code
NPPS	NASA Personnel/Payroll System
NTE	Not-to-Exceed
OASDI	Old Age, Survivors, and Disability Insurance
OMB	Office of Management and Budget
OPM	Office of Personnel Management
OT	Overtime
PC	Production Control
PCS	Permanent Change of Station
PF	Program Function
QTD	quarter-to-date
SES	Senior Executive Service
SF	Standard Form
sfw	software
SRS	System/Software Requirements Specification
SSN	Social Security Number
SSA	Social Security Administration
T&A	Time and Attendance
TALC	Time, Attendance, and Labor Collection
TALC/LD	Time, Attendance, and Labor Collection/Labor Distribution System
TSP	Thrift Savings Plan
UOG	User and Operations Guide
USDA	US Department of Agriculture
W/H	Withholding
WIG	Within Grade
WK	Week
YTD	Year-to-date