FLIGHT READINESS STATEMENT
STS-91/ET-96
EXTERNAL TANK PROJECT
PRE-FLIGHT REVIEW

EXTERNAL TANK ET-96/STS-91, AS IDENTIFIED IN THE EXTERNAL TANK PROJECT PRE-FLIGHT REVIEW DATED APRIL 9-10, 1998, IS CONSIDERED READY TO SUPPORT FLIGHT UPON ACCEPTABLE DISPOSITION OF OPEN/PLANNED WORK AND/OR OPEN ACTIONS.

for
E. C. SMITH/EB01

J. L. LUSK/EE31

for
A. F. WHITAKER/EH01

for
A. O. HARRIS/CR01

J. W. KILPATRICK/EL01

B. E. GOLDBERG/ED01

for
H. V. McCONNAUGHEY/EP01

M. D. SMILES/CR70

P. V. COUNTS/SA31, CHAIRMAN

ACTION: PROVIDE LIST (MATI) OF PROCESS CHANGES @ S. VC MARY LEVEL (LIKE DESIGN CHANGE SUMMARY)
- ie DELTA BETWEEN DYE PENT PROCESS SLWT VS LWT DRIVEN BY HIGHER SENSITIVE

April 9-10, 1998

Space Shuttle External Tank

STS-91/ET-96 (SLWT) Pre-Flight Review

HOLD OPTION TO CONDUCT Δ PREFLIGHT FOR STS 90 FOAM OR TANKING ISSUES

VERIFY WIDE PANEL REPORT BEEN ~~APPROVED~~ ACCEPTED BY MBKW (ED, EH, BICKLEY)

CONFIRM 6th BUY WILL CONTINUE LOT ACCEPTANCE REST AND SSL TESTING AT HIGHER CYCLE LEVELS (95%) YES ET120 & SUBS

ET 32 - WHY TOTAL PROOF TEST CRACKS DON'T TOTAL 60 INDICATIONS?

NOTE DCR BASELINE IS ET 96 - BE SURE TO COVER CAPS, EXTRUSIONS ETAL WHEN WE DO SUBSEQUENT FRR'S

X ACTION: PROVIDE PROCESS QUALIFICATION OF CHANGE FROM PRIMER TO ANODIZE ON INTERTANK WITH TIME CONSTRAINT BETWEEN ANODIZE AND PRIME APPLICATION

CLOSED: RESPONSE PROVIDED TO BEN - ACCEPTABLE

ACTION: PAGE 74: ADD CHART TO SHOW ADDED MARGIN QUOTED IN FRR FOR IFA RESPONSE TO FOAM LOSS / SLWT THRUST PANEL LESS FLEXIBLE.

ET 78 :- DEFINE MISSION LIFE
ET 90 : WIDE PANELS COMPLETED?
ET 91 CLARIFY CHART I/PASS LACK OF FUSION

FUTURE REVIEWS - DISCUSS PROCESS CHANGES IN PREFLIGHT FRR'S (NOT IN APPENDIX)

ET96PFR.4250.mg.4/98

Agenda

• ***Introduction***	*Terry Hibbard*
• SLWT Overview	Louis Palermo
– System Requirements	Don Bolstad
– Material and Process Development	Jim McAllister
– DCR Baseline Design Overview	Mike Quiggle
– Verification/Acceptance	Robert Pontiff
– NCD Reviews	Don Bolstad
– DCR Summary	Jim Feeley
• Post-DCR Design Changes	Steve Lim
• KSC Processing	Terry McKeough
• SLWT Tanking Test	Steve Copsey
• SRM&QA Assessment	Jim Feeley
• Special Topic	
• Certification Status	
• Mission Unique Assessment	
• Readiness Statement	

Introduction

Purpose

- The purpose of this review is to certify the ET-96 readiness for flight
  - The SLWT design was baselined and certified in the Design Certification process
  - Review will provide a summary of the SLWT development, acceptance, and certification

- SLWT DCR process verified new design(s) and new induced environments, and documented verification traceability from design requirements through completion of the verification process
  - Baseline design accepted in November 1997
  - Review included the verification of those elements which were unchanged from LWT but are a part of the SLWT
  - SLWT was certified as a complete vehicle, not just the changes from LWT

Introduction

Mission/External Tank Highlights

STS-91

- Wet countdown demonstration test — 5/12/98
- Launch
  - Window — 5/28/98
  - Pad — 2005 - 2015 EDT
  - Orbiter — A
  - Orbital inclination — Discovery (OV-103)
  - ET photo coverage — 51.6° - Insertion at 173 NM
    - Crew photos from cockpit window
    - Umbilical well cameras
- Primary payload
  - 9th MIR docking
  - SPACEHAB
- Landing
  - Time — 6/7/98 0235 EDT
  - Location — KSC

ET-96

- DD250 acceptance — First SLWT to fly
- Shipped to launch site — 1/13/98 1/29/98

Introduction

SLWT Development

- SLWT program initiated in 1994

- Required for Space Station Launches
  - Needed to reach 51.6° orbital inclination
  - Supports deployment of U.S. modules
  - Meets Space Station Program schedule

- Designed to shuttle performance enhancement environments
  - Adds 7,500 lbs payload capacity to space shuttle
  - Each pound of weight saved on ET equates to one pound of increased payload capacity

Introduction

SLWT Heritage

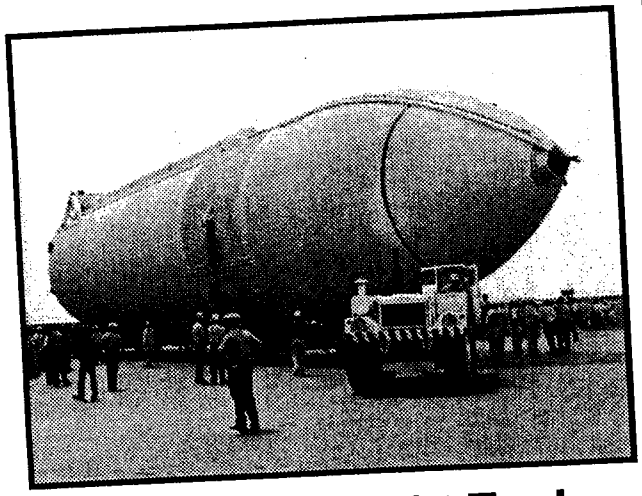

Standard Weight Tank (SWT) - 75,569 lbs

6 Successful Flights

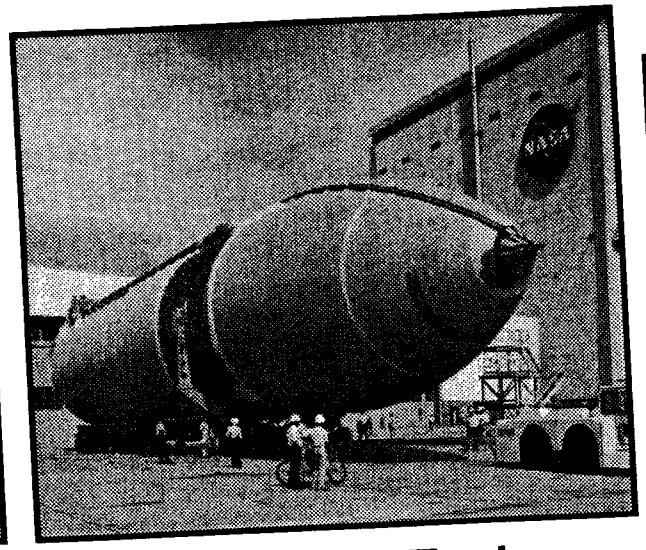

Lightweight Tank (LWT) - 65,539 lbs

82 Successful Flights

(as of 4/6/98)

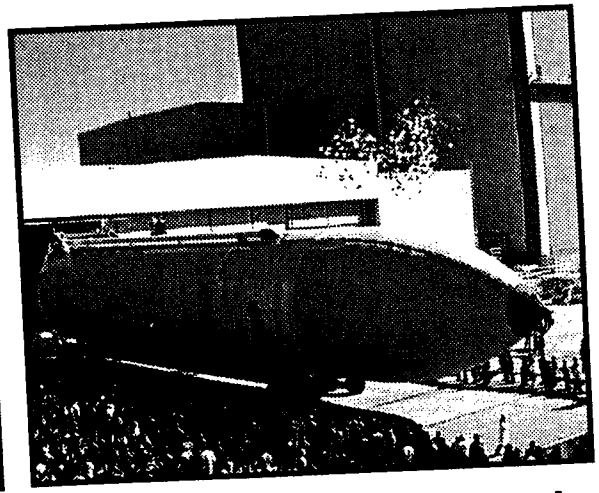

Super Lightweight Tank (SLWT) - 57,911 lbs

Achieved 100% Mission Success

Achieved 100% Mission Success

Committed to 100% Mission Success

Introduction

SLWT Reviews/Milestones *- Extensive reviews within and outside of the NASA have been performed*

- Nonadvocacy Review - January 1993
- Aerospace Safety Advisory Panel - May 1993
- ATP Awarded - February 1994
- NASA/Martin Marietta Independent Reviews - April 1994
- 1994 Independent Annual Review - May 1994
- Verification Team Independent Review - May 1994
- Preliminary Requirements Review (PRR) - June 1994
- NASA/Martin Marietta Independent Reviews - June 1994
- Aerospace Safety Advisory Panel - June 1994
- ALTA Design Review - August 1994
- Preliminary Design Review - November 1994
- Blue Ribbon NDE Review - April 1995
- 1995 Independent Annual Review - April 1995
- Verification Team Independent Review Followup - April 1995
- NASA/Martin Marietta Independent Review Followup - May 30-June 1995
- Space Shuttle Program Review - June 1995
- Aerospace Safety Advisory Panel - June 1995
- Critical Design Review - June 1995
- Verification Team Independent Review Followup - August 1995
- Verification Team Independent Review Followup - February 1996

Introduction

SLWT Reviews/Milestones (continued)

- Program Manager's Review - April 1996
- Aerospace Safety Advisory Panel - May 1996
- 1996 Independent Annual Review - May 1996
- NASA Independent Review of Extrusions - July 1996
- ALTA Capability Test Complete - September 1996
- Verification Team Independent Review Followup - November 1996
- Review with Aerospace Safety Advisory Panel - March 1997
- SLWT-1 LH2 and LO2 Tank Proof Test - March 1997
- Space Shuttle Program Review - April 1997
- 1997 Independent Annual Review - June 1997
- Design Certification Review Phase I - June 1997
- Design Certification Review Phase II - September 1997
- Space Shuttle Program Design Certification Review - October 1997
- Lead Center Design Certification Review - November 1997
- ET/SRB Mate Review - March 1998
- ***Pre-Flight Review - April 9-10, 1998***
- ***Space Shuttle Test Readiness Review - May 5, 1998***
- ***SLWT Tanking Test - May 12, 1998***
- ***Space Shuttle Flight Readiness Review - May 14, 1998***
- ***First SLWT Launch - May 28, 1998***

SLWT Design Overview

LH2 Tank

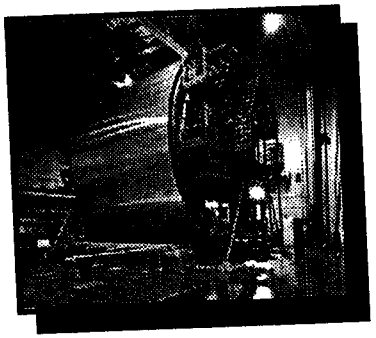

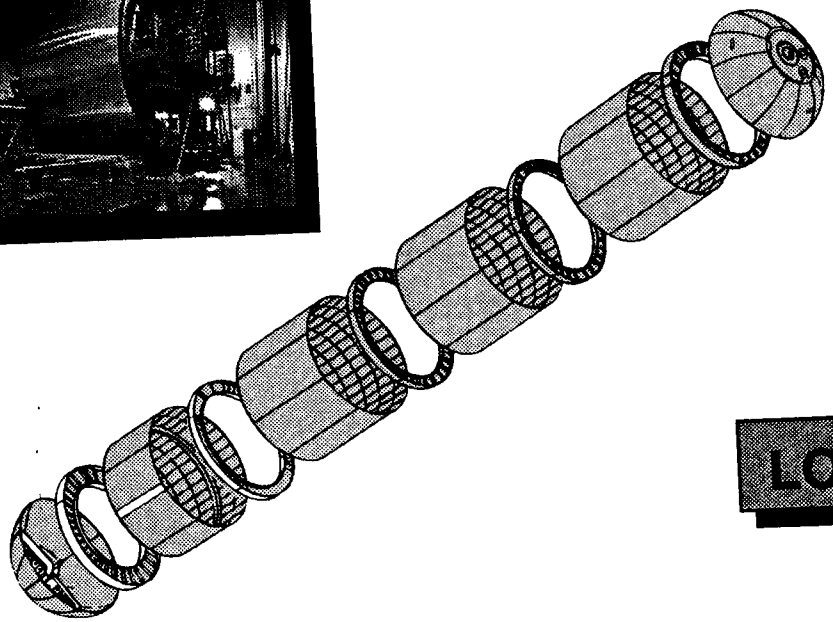

- Substitute Al 2195 for Al 2219
- Redesign to Orthogrid Waffle
- Optimize TPS Application

Intertank

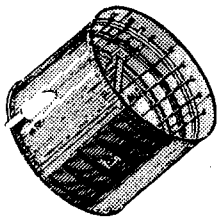

- Substitute Al 2090 for Al 2024 and Al 7075
- Machine TPS after Application

LO2 Tank

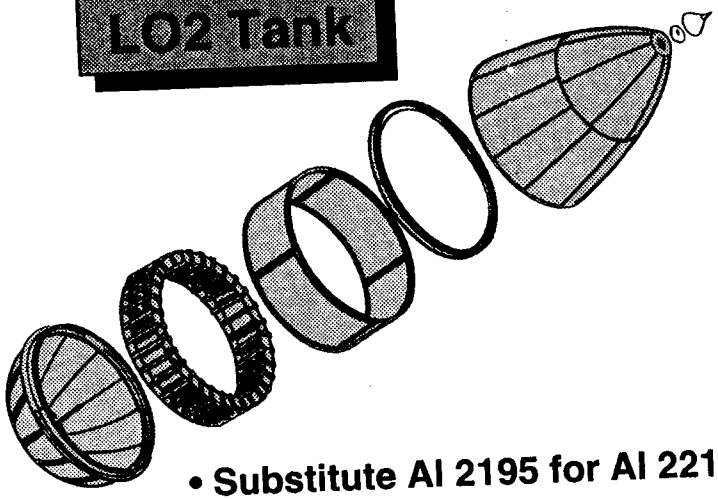

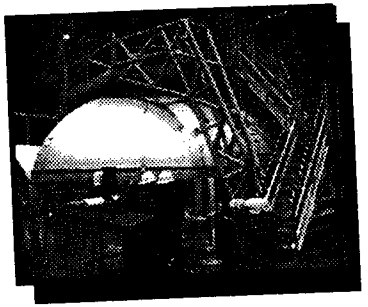

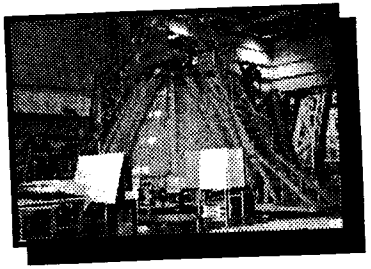

- Substitute Al 2195 for Al 2219
- Resize
- Optimize TPS Application

= Al Li 2090, 2195

= Other Redesigned Parts

= No Change

Agenda

• Introduction	Terry Hibbard
• ***SLWT Overview***	
– ***System Requirements***	***Louis Palermo***
– Material and Process Development	Don Bolstad
– DCR Baseline Design Overview	Jim McAllister
– Verification/Acceptance	Mike Quiggle
– NCD Reviews	Robert Pontiff
– DCR Summary	Don Bolstad
• Post-DCR Design Changes	Jim Feeley
• KSC Processing	Steve Lim
• SLWT Tanking Test	Terry McKeough
• SRM&QA Assessment	Steve Copsey
• Special Topic	Jim Feeley
• Certification Status	
• Mission Unique Assessment	
• Readiness Statement	

System Requirements

SLWT is Part of Overall Weight Savings Program for ISS

- Objectives of Performance Enhancement (PE)
  - Meet the Space Station payload commitment of 35,000 lbs
  - Provide better than 85% Launch Probability for high dynamic pressure flight designs
  - Recertify the operational Shuttle Vehicle with Performance Enhancements

- Improvements approved through:
  - Hardware Modifications
  - Software Changes
  - Flight Design Updates
  - Consumables Budget Optimization

System Requirements

Performance Enhancement Cycle Approach

- Design cycle
  - Configuration Trades and Definition
  - Design Environments for SLWT

- Certification cycle
  - Certification for original PE configuration
  - Delta certification for current PE configuration

- Verification cycle
  - Verify that design/certification cycle results are still valid after model/data base updates from certification cycle
  - Verify that design/certification cycle results met requirements

System Requirements

Level II Flight Systems Certification Process

- Baseline trajectory groundrules implemented PE flight design concepts
- Update integrated vehicle configuration math models
- Update aerodynamic databases based on flight data and trajectory requirements
- Update vehicle software configuration
- Generate comprehensive trajectory database
- Generate certification induced environments for each elements for all flight phases
  - Loads
  - Thermal
  - Venting
  - Ullage Pressure
- Verify flight design criteria
- Certify DOLILU II
- DOLILU II low q/high q certification was completed September 1997
- All realistic trajectory designs have greater than 95% launch probability
- Expanded Element certifications and constraints
- DOLILU II flight design tool certified

System Requirements

SLWT Vehicle Loads Flow

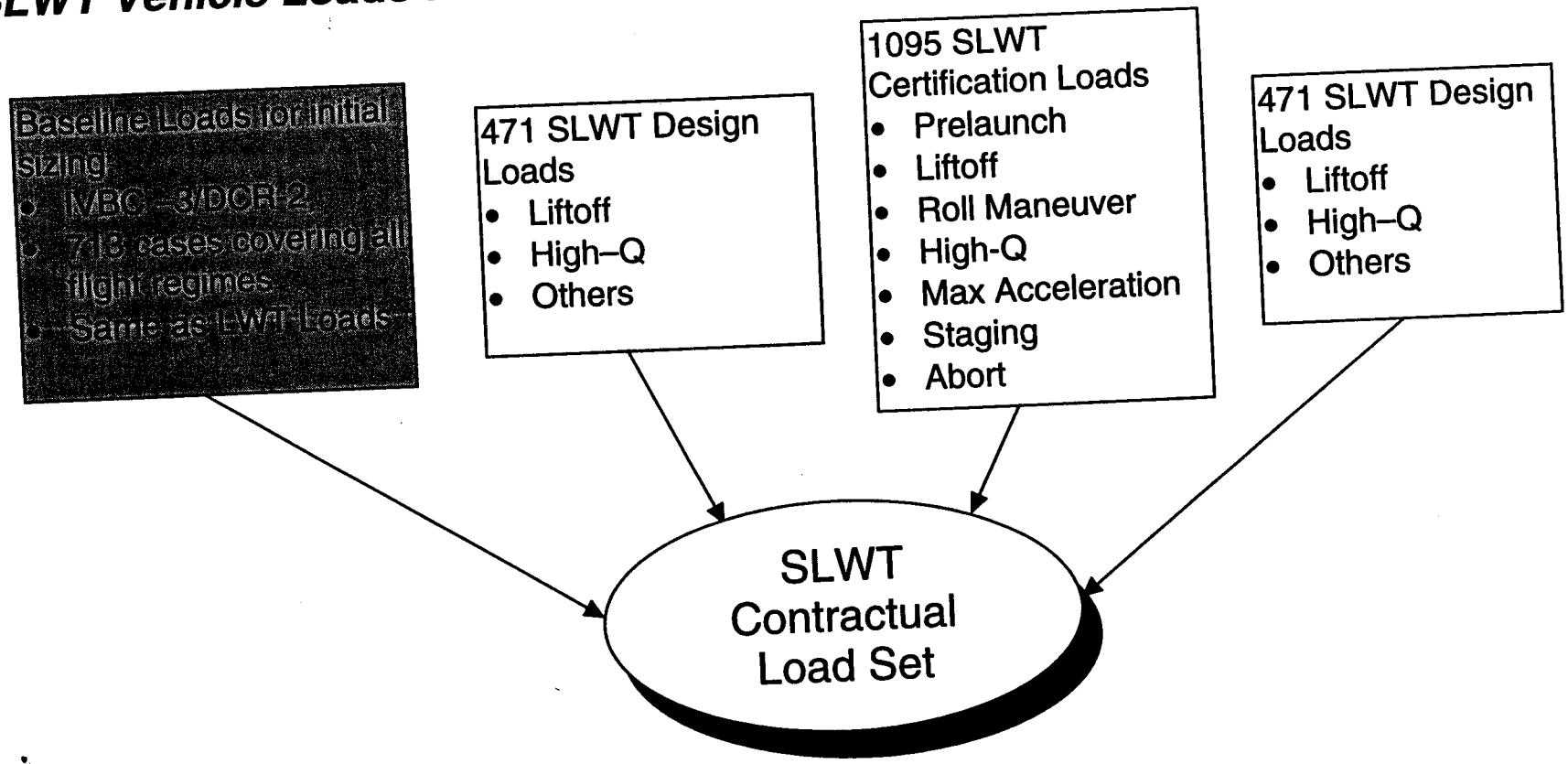

This set of loads no longer contractual

System Requirements

Changes to Level II Loads

- Revised inputs into loads analysis for SLWT to include the following:
  - SRB Thrust Spike and updated SRB Thrust Oscillations
  - Update to IVBC-3 SSME Throttle Profile
  - SRB Burn Rates, PMBTs
  - Engine Out Loads (Engine Out at Mach Number)
  - SLWT model changes reflecting revised mass and stiffness
    - Not a significant loads driver

System Requirements

Vibroacoustic Load Increase Due to SLWT Design

- Contract End Item Specification, Paragraph 3.2.7.2, "Induced Environments", requires that the ET shall be designed to the requirements contained in NASA Reference Publication 1074
  - Acoustic level unchanged from LWT
  - MMMSS has assisted NASA/MSFC in redefining vibration data base for SLWT

- Environments driven by:
  - Sound pressure levels
  - Local structure configuration and properties
  - Component mass

- Vibration environments increased due to tank weight reduction

- Components attachments assessed and cleared for increased loads

System Requirements

PE Thermal Environments Generated for Element Certification

- **Ascent**
  - Comprehensive set of Thermal certification environments were generated for the SLWT configuration and provided to the elements
    - Aeroheating
    - Plume impingement heating
    - Plume Heating
    - Thermal Interface temperatures
  - Generic Certification Heating Environments
    - SSD95D0489, Aerodynamic Heating Data Book
    - SSD96D0343, Plume Heating Data Book
    - SD74-SH-144F, Thermal Interface Design Data Book
  - Verification assessment confirmed the robustness of the certification environments
  - All environments have been documented in data books of MA letters and referenced in NSTS 07700, Volume X appendix 10.11
- **Entry**
  - New nominal rupture altitudes were used to calculate the entry aerodynamics
  - Nominal ascent aerodynamic heating rates used for entry calculations
  - A nominal entry altitude of no higher than 249,000 ft. is the design entry condition

System Requirements

Thermal Environments – Ascent

SLWT Updated Heating Trajectory Groundrules

	Generic Cert	SLWT Update
• Dynamic Press	819 psf	819 psf
• Launch Month	February	February
• SSME Power Level	104%	**106%**
• Inclination	28.45 deg	**51.6 deg**
• Launch Window	60 minutes	**10 minutes**
• Boosters	Recoverable	**Disposable**
• Dispersions		
– No-Fail	3 Sigma-Spec	**3 Sigma-Flt**
– AOA/TAL	1 Sigma-Spec	**1 Sigma-Flt**
– RTLS	1 Sigma-Spec	1 Sigma-Spec
• ΔStaging Altitude		
– No-Fail	14500 ft	**6000 ft**
– AOA/TAL	4800 ft	**2000 ft**
– RTLS	4800 ft	4800 ft
• Alpha/Beta	Spec	**DOLILU**
• 1st Stage yaw Steering	No	**Yes**

System Requirements

MPS Pressurization System Summary

- Integrated MPS pressurization analysis was performed to establish max/min ET ullage ICD profiles for ET structural design and certification

- Assessment configurations included:
  - SSME generic tags and transient profiles for Phase II, BLK IA, and BLK II configurations
  - Trajectories included first stage throttle extremes for PE flight design
  - SLWT LO2 tank heat transfer data reflecting the removal of one slosh baffle
  - Orbiter GO2 and GH2 FCV sizes and tolerances

- Implemented and verified hardware changes
  - Confirmed GO2 FCV 4-way swap change and cancellation of the active FCV's
  - Optimized GH2 FCV size and reshimmed to 70/31%

- The changes produced ullage pressures difference shown on following charts

System Requirements

LH2 Tank PE Normal Mission ICDs - LWT vs SLWT

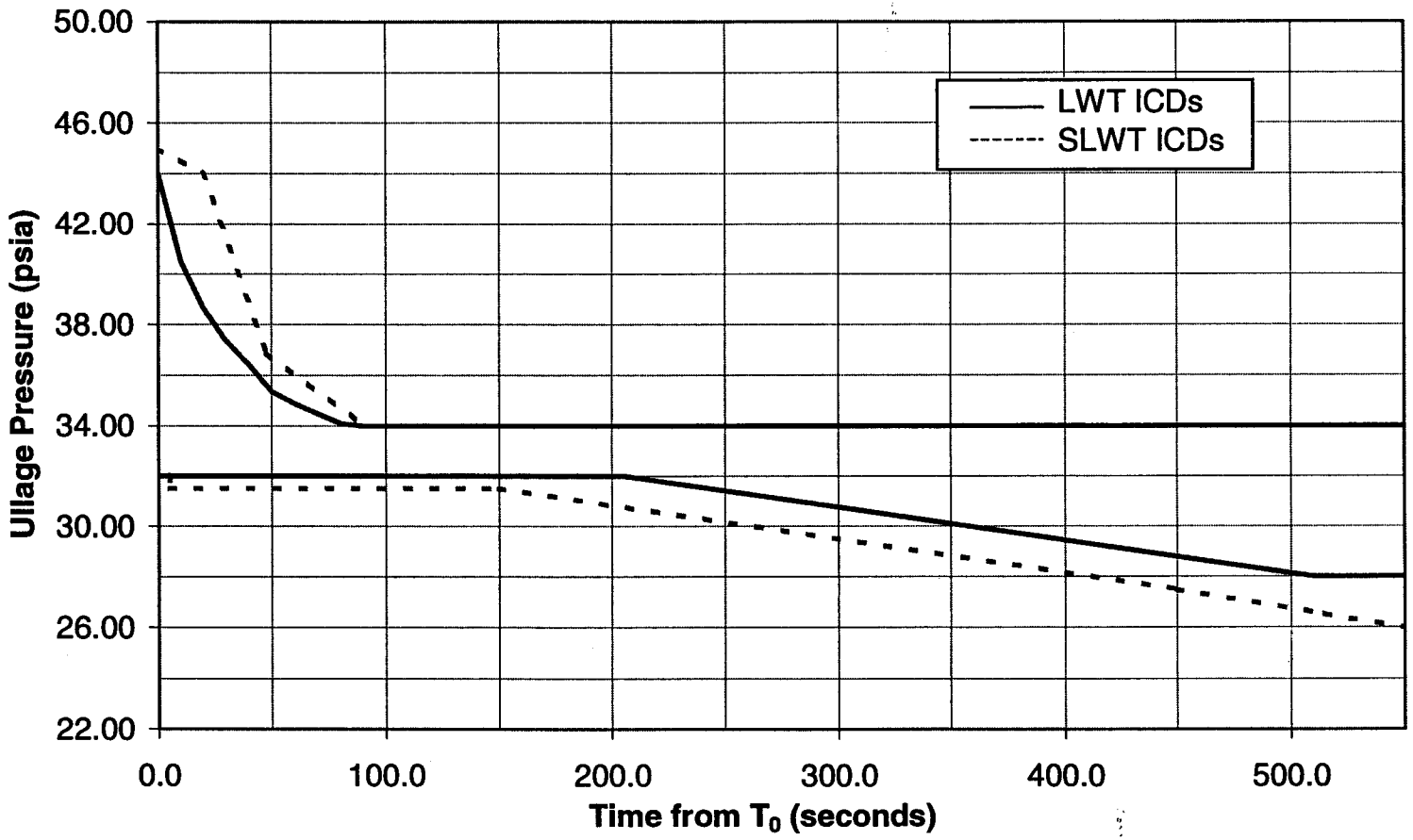

R.4250.mg.4/98

System Requirements

LO2 Tank PE Normal Mission ICDs - LWT vs SLWT

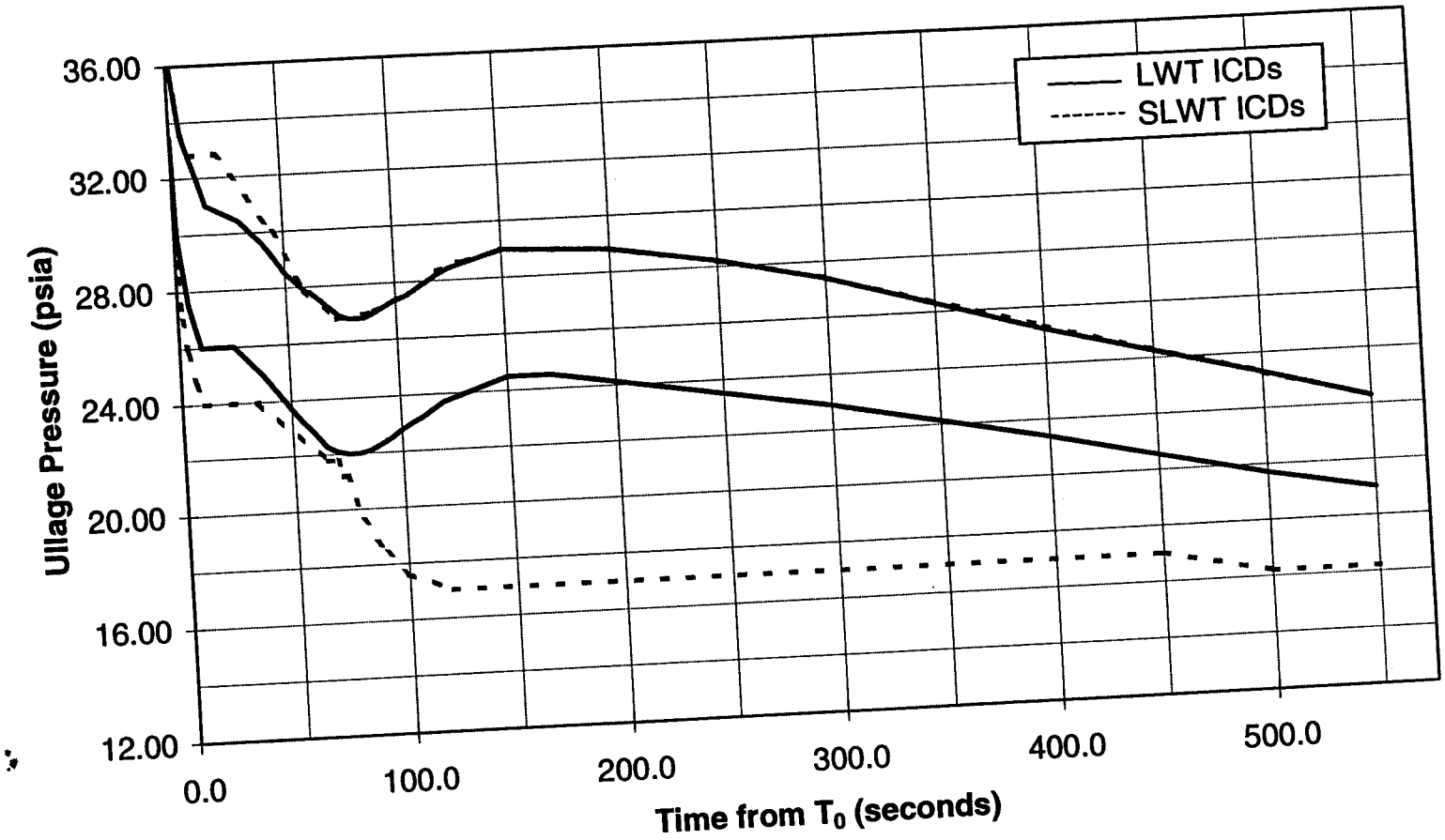

System Requirements

SLWT Venting Analysis

- All of the SLWT compartments requiring venting analyses have been combined into one document

- The differences between the LWT and SLWT ascent venting characteristics are a direct result of the differences in the environments
  - LWT was based on the 3A Nom Q trajectory with dispersions using a Vandenburg atmosphere
  - SLWT was based on four PE ascent venting trajectories incorporating the KSC Revised Range Reference atmosphere

- The differences between the LWT and SLWT venting analyses have not been significant enough to warrant a design change for venting purposes

System Requirements

Conclusion

SLWT loads, vibroacoustic loads, thermal environments, tank pressures and compartment chamber pressures due to venting were analyzed and determined to be acceptable

Agenda

• Introduction	Terry Hibbard
• ***SLWT Overview***	
– System Requirements	Louis Palermo
– ***Material and Process Development***	***Don Bolstad***
– DCR Baseline Design Overview	Jim McAllister
– Verification/Acceptance	Mike Quiggle
– NCD Reviews	Robert Pontiff
– DCR Summary	Don Bolstad
• Post-DCR Design Changes	Jim Feeley
• KSC Processing	Steve Lim
• SLWT Tanking Test	Terry McKeough
• SRM&QA Assessment	Steve Copsey
• Special Topic	Jim Feeley
• Certification Status	
• Mission Unique Assessment	
• Readiness Statement	

SLWT Materials and Processes Development

- The substitution of 2195 and 2090 hardware led to a challenging DDT&E phase for the LMMSS and MSFC metallurgists and weld engineers
  - 2195 plate fracture toughness
  - 2090 sheet forming and joining
  - Weld repairs
  - Wide panels
  - Intersection cracks
  - NDE

- All issues have been resolved and mitigated

ALL REPORTS SUBMITTED

SLWT Materials and Processes Development

Changes from LWT to SLWT

Item	LWT	SLWT	Discussion
Aluminum plate and extrusion specifications	QQ-A spec available	2195 specifications prepared by LMC/MSS and approved by NASA/MSFC	Two plate suppliers qualified • Reynolds Metals • Alcoa
Plate lot acceptance	Standard practice (i.e., 2 tensile in LT direction)	• Expanded lot acceptance • 2 tensile's in three directions • Testing on plate-by-plate basics • Fracture toughness, including simulated service testing of all 2195 plate lots	Strategy developed due to a lack of MIL-HDBK database
2195 component forming	• Stretch forming in T3 temper • LH2 B/P's machined and drape formed	• Stretch form in -0 temper after preforming • LH2 B/P's are machined, brake formed and age formed	• Higher strength and stiffness of 2195 required process modifications • 2195 has similar chem mill characteristics to 2219

SLWT Materials and Processes Development

Changes from LWT to SLWT (continued)

Item	LWT	SLWT	Discussion
Intertank sheet specifications	QQ-A spec available	2090 specs prepared by LMMSS and approved by MSFC	• Only qualified supplier is Alcoa • Used MIL-HDBK design values
Intertank sheet forming and joining	Standard aerospace practices	2090 required special handling and processing	• Processes established • to provide acceptable • hardware and assemblies
Plate and extrusion allowables	MIL - HDBK 5 value available	Joint LMC / MSS and NASA / MSFC test program • Tensile • Fracture Toughness • Stress Corrosion • Physical Properties	• ≈10,000 tests to date • Used lot acceptance test tensile results for room temperature values • Values concurred at LMC/MSFC allowables meetings • DCR RID Q-001 resulted in retests that verified design values

SLWT Materials and Processes Development

Changes from LWT to SLWT (continued)

Item	LWT	SLWT	Discussion
Plate & extrusions NDE	• U.T. of billets • Class II penetrant (i.e. I-319)	• U.T. of billets • Class III penetrant (ie, P135) – Hardware is inspected twice by two sets of eyes	SLWT had on-site personnel at Reynolds Metals
Weld processes	GTA and VPPA	• VPPA and SPAW • GTA used for fitting welds and repairs only	SPAW development was the result of a LMC MSFC effort to resolve a difficult downhand weld situation for $t \geq 0.320$"
Weld land thickness	0.140" - 1.00"	0.140" - 1.00"	• Initial SLWT design used LWT thickness as baseline • Additional analysis resulted "robust weld" thickness increases

SLWT Materials and Processes Development

Changes from LWT to SLWT (continued)

Item	LWT	SLWT	Discussion
Weld allowables	• Saturn data available at program start. – Tensile tests for peaking and mismatch – Test program required for fracture control data • LMC/MSFC program for VPPA	• Large LMC/MSFC Test program for – VPPA – SPAW – Weld Repairs – Wide Panels – Tensile – Fracture – Simulated Service	• SLWT had ≈ 9,100 tests. • Including over 7,000 cert panel tests • Design values agreed to by LMC/MSFC Weld Team
Weld repairs	• Two repairs without MRB • No strength or toughness reduction for Multiple repairs	• All repairs require MRB authority • Reduces weld strength • Smaller critical flaw for repair welds than initial welds	2195 welds should not be unnecessarily repaired

SLWT Materials and Processes Development

Changes from LWT to SLWT (continued)

Item	LWT	SLWT	Discussion
Weld repair technique	Varied	• Faster travel speed • Minimize heat input • Alternate side repairs to minimize residual stresses and consume fusion zone	• Techniques are the result of a large LMC/MSFC development program • Welders were recertified
Planishing	Used to restore contour	• Used to restore contour • Used to minimize residual stresses caused by weld repairs STANDARD PROCEDURE FOR PLANISHING?	• Required for nearly all types of heat repairs • All weld repairs require wide panel confirmation tests – 300 tests performed for design values and ET-96 – >600 performed to date
Weld NDE	• X-ray - 90" angle • Penetrant - I-319 • UT for special NDE	• X-ray - 90° all welds – 35° angles for repairs, crossover, etc. – ± 7.5° for intersections • Penetrant - Class III (P135) • UT for special NDE	DCR RID Q-007 closure modified penetrant inspection procedures

SLWT Materials and Processes Development

Changes from LWT to SLWT (continued)

Item	LWT	SLWT	Discussion
Weld grade	Used curves based on thickness, flaw size and stress	Data resulted in two curves (t = ≤ 0.360" and ≥ 0.485") for stress vs. flaw size	Typically, SLWT allowable flaw size is smaller than LWT
Adequate proofed welds	Minimum proof factor of 0.955 for post proof NDE	Minimum proof factor is 1.00 for post proof NDE	Used lower bound data to select 1.00
Post proof NDE	• Less than 100% proofed welds – LO2 = 300" – LH2 = 1300" • All repairs	• Less than 100% proofed welds – LO2 = 660" – LH2 = 5000" • All weld repairs, intersections, crossovers, "at risk" welds, etc	• Used PF = 1.00 for SLWT welds • ET-96 was 100% post proof inspected after first proof test
Proof test aborts	• Allowed up to 10 proof test cycles above 60% without MRB	• Allows unlimited protoflight cycles • Allows up to two proof test cycles above 60% without MRB	MAF fracture board has approved the cycle allowances

SLWT Materials and Processes Development

Changes from LWT to SLWT (continued)

Item	LWT	SLWT	Discussion
Post proof NDE indications	• Reproof if heat repairs occur • Some indications were dispositioned use as is for flight	Reproof if heat repairs occur	• Not uncommon for LWT to have post proof indications • ALTA had no post proof x-ray indications – One small penetrant indication removed • ET-96 LO2 and LH2 tanks each had three proof tests

ET-96 Post-Proof Test Defects Requiring Heat Repair

	LH2	Date	LO2	Date
Post-proof Test #1	25	3/27/97	11	3/26/97
Post-proof Test #2	5	7/6/97	5	5/7/97
Post-proof Test #3	0	7/29/97	0	6/9/97

SLWT Materials and Processes Development

Changes from LWT to SLWT (continued)

- One major post-DCR change impacted the materials activity
  - Block II SSME pre-pressurization will be incorporated at ET-101
  - Block II pre-pressurization requires 95% of proof cycle
    - Plan to perform one 95% cycle during tanking
    - All SLWT simulated service test data did not account for 95% cycle

Item	LWT	SLWT	Discussion
Prelaunch cycles on the pad	• 4x mission life • Assumed seven cycles to limit flight stress	• Lot acceptance testing (plate) and design allowables testing (extrusion and welds) certified seven pre-launch cycles to 85% of proof	• ET-96 will see on prelaunch pressure cycles to 95% • MSFC FCB concurred to testing to verify ET-96 good for two cycles to 95% plus five cycles to 75% proof pressure • Tests in progress – ECD mid May 1998

SLWT Materials and Processes Development

Conclusions

- A comprehensive acceptance and NDE plan for all SLWT processes and hardware
- Plate and extrusion materials have successfully passed the lot acceptance tests
- Hardware components have been accepted to the NDE and witness panel requirements
- Weld processes and weld design values have been established and certified

SLWT/ET-96 Materials and Processes are Acceptable for Flight

Agenda

• Introduction	Terry Hibbard
• ***SLWT Overview***	
– System Requirements	Louis Palermo
– Material and Process Development	Don Bolstad
– ***SLWT DCR Baseline Design***	***Jim McAllister***
– Verification/Acceptance	Mike Quiggle
– NCD Reviews	Robert Pontiff
– DCR Summary	Don Bolstad
• Post-DCR Design Changes	Jim Feeley
• KSC Processing	Steve Lim
• SLWT Tanking Test	Terry McKeough
• SRM&QA Assessment	Steve Copsey
• Special Topic	Jim Feeley
• Certification Status	
• Mission Unique Assessment	
• Readiness Statement	

SLWT DCR Baseline Design - Summary

LO2 Tank

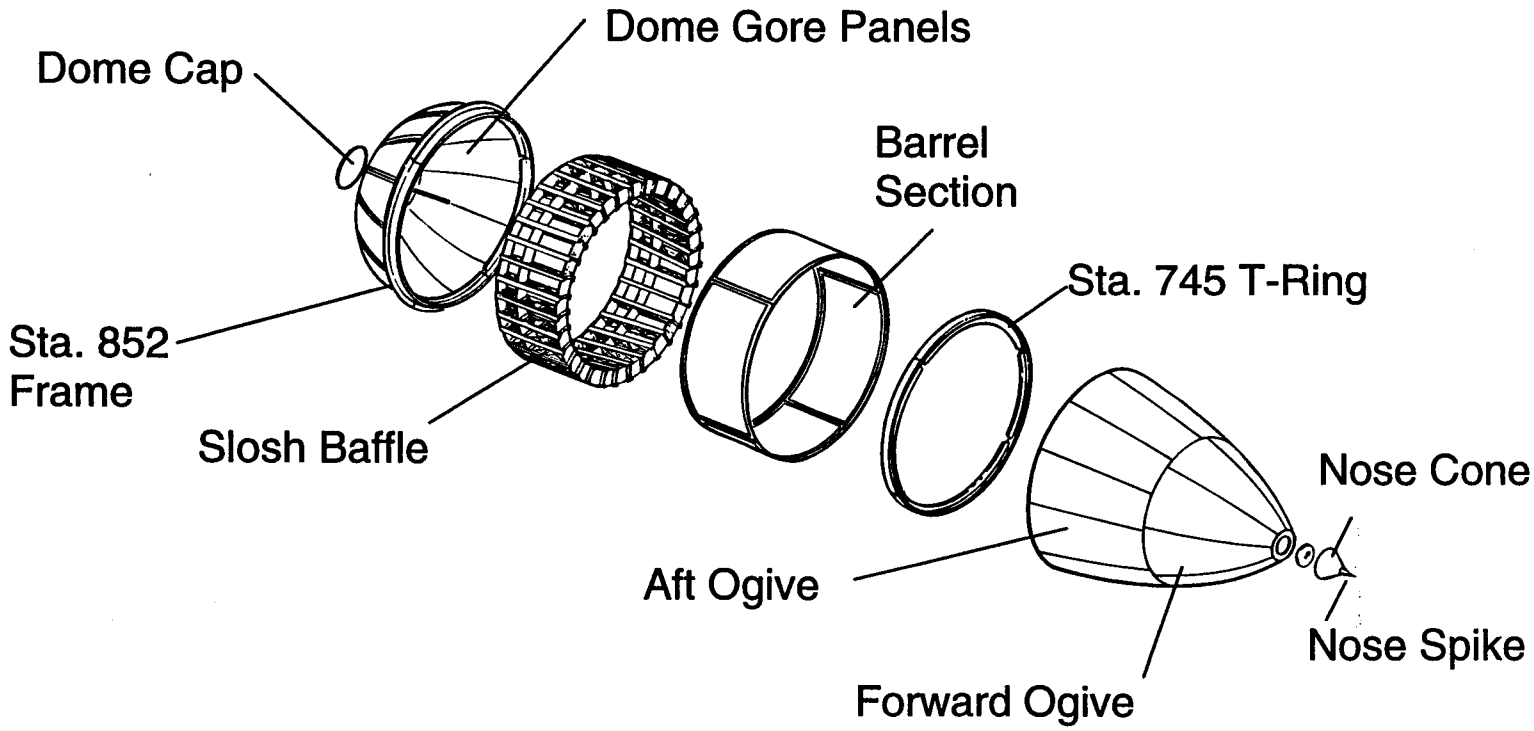

SLWT DCR Baseline Design - Summary

LO2 Tank

Item	SLWT
Nose Spike	• Same configuration as LWT
Nose Cone	• Same configuration as LWT
Ogive Cover Plate	• Same configuration as LWT
Ogive Fitting	• Same configuration as LWT
Forward Ogives	• Material substitution for gore panels, Al 2195 for Al 2219 • Resize membrane and weld land thickness • Reduce internal clips for shorter LO2 sensor mast from 8 to 4
LO2 Sensor Mast	• Removed aft half of mast
Aft Ogives	• Material substitution for gore panels, Al 2195 for Al 2219 • Resize membrane and weld land thickness
Sta 745 T-Ring	• Material substitution for outer chord Al 2195 for Al 2219 • Modified ring geometry (aft) to match revised barrel geometry
Barrel Section	• Material substitution Al 2195 for Al 2219 • Resize membrane thickness and weld land width/thickness • Revise geometry to cylindrical from tapered

SLWT DCR Baseline Design - Summary

LO2 Tank (continued)

Item	SLWT
Slosh Baffle	• Resize 2024 webs • Remove one baffle tray (level 5) (previously flown) • Increase thickness radial stiffener, middle chord at frame 745 • Increase quantity fasteners at middle chord/stringer joint • Material substitution for inboard and outer board stringers, and radial stiffeners Al 2195 for Al 2024
Sta 852 Frame	• Material substitution for outer chord extrusion, Al 2195 for Al 2219 • Webs, inner chords and fittings are same configuration as LWT
Dome Gores	• Material substitution Al 2195 for Al 2219 • Resize membrane thickness and weld land width/thickness • Resize and re-space reinforcing ribs
Dome Cap	• No material change, Al 2219 LWT and SLWT • Resize membrane and weld land thicknesses • Membrane offset 0.02" from center of peripheral weld land
Manhole and Suction Fittings	• Same configuration as LWT
Manhole Cover	• Same configuration as LWT
Anti Vortex Baffles	• Same configuration as LWT

SLWT DCR Baseline Design - Summary

LO2 Tank (continued)

ITEM	SLWT
GO2 Press Lines, Cable Trays and Covers, Supports	• Same configuration as LWT
TPS	• Reduced NCFI 24-124 foam thickness on tank sidewalls • Revise nominal thickness on LO2 tank ogive • Thick/thin spray application on LO2 barrel and aft dome (early implementation on STS-89/ET-90)
Propulsion/ Electrical	• Removed spare wires in harnesses • Revised LO2 feedline BSTRA struts • Reduce thickness on LO2 feedline elbows • Increase proof test requirement on GO2 pressurization line

SLWT DCR Baseline Design - Summary

Intertank

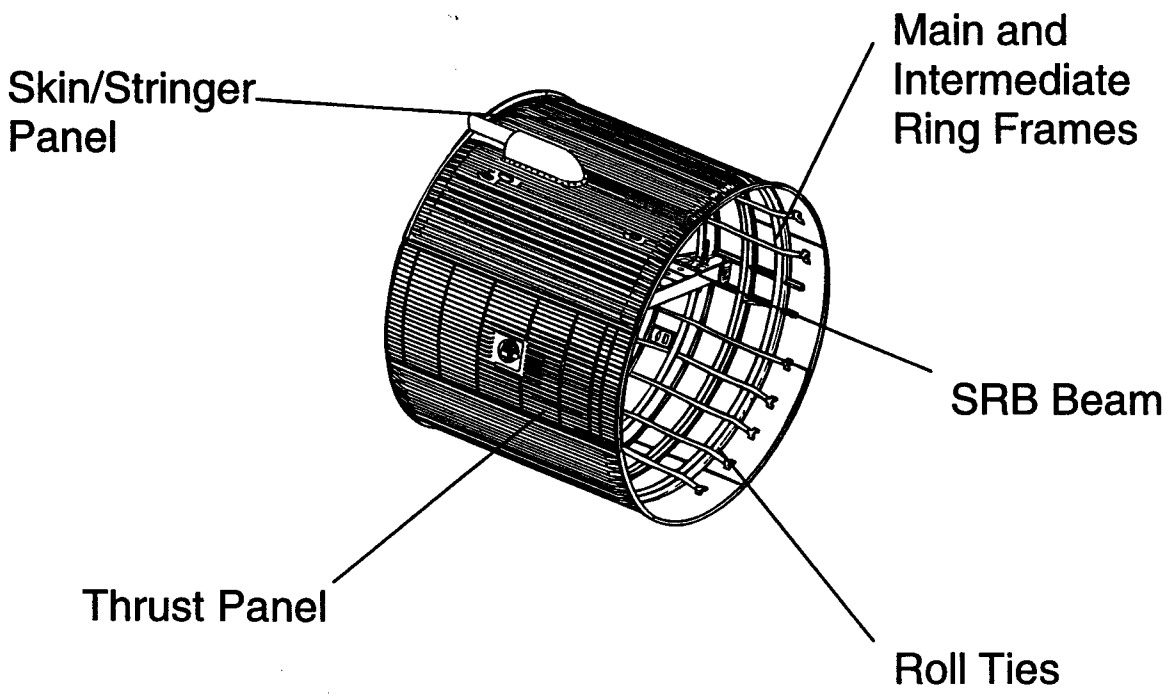

SLWT DCR Baseline Design - Summary

Intertank Changes

Item	SLWT
Skin/Stringer Panel	• Material substitution, Al 2090 for Al 2024 and Al 7075 on skin panels, doublers, buttstraps and sheet metal stringers • Reduced thickness of detail parts wherever possible due to improved material properties • Reduced thickness of Al 2024 extruded, machined stringers from 0.100 to 0.080 on fwd and aft ends • Replaced self aligning Hi-Loks with GP lockbolts for panel chord installations • Substituted Al 2195 extrusion for Al 2024 extrusion on fwd and aft panel chords • Added 0.025" thick Al 2024 internal doublers across full panel width in fwd bay of panel 8 assy on -Z axis
Thrust Panel	• Increased most rib and membrane thicknesses forward of SRB fitting and reduced rib membrane thicknesses aft of SRB fitting and along out board edges • Added seven (7) full panel width, circumferential ribs • Add internal buttstraps between Sta 985 and 1082 frames • Internal longeron, forward of SRB fitting, remained unchanged from LWT design

SLWT DCR Baseline Design - Summary

Intertank Changes (continued)

Item	SLWT
Main and Intermediate Ring Frames	• Retained Al 7075 material beaded webs and reduced thicknesses from 0.050 at all locations to 0.050, 0.040, 0.032, and 0.025 • Replaced Al 7075 with Al 2090 on flat webs and chord splices and reduced thicknesses wherever practical • Replaced Al 7075 extruded frame stiffeners and panel breakers with Al 2090 extrusions and reduced thicknesses wherever practical • Added shims at adjoining webs to accommodate thickness differences • Eliminated most accommodations for rotating of RSS harnesses
Roll Ties	• Substituted Al 2090 for Al 2024on sheet metal roll ties and reduced thicknesses wherever practical • Substituted Al 2090 for Al 2075 on extruded, unformed roll ties and retained Al 2075 extrusions on formed roll ties • Created new extruded roll ties, where required, to support RSS relocation to SRB Beam and created new roll tie attachment plates on main frame chords

SLWT DCR Baseline Design - Summary

Intertank Changes (continued)

Item	SLWT
SRB Beam	• Retained Al 7075 material for beam web. Revised web from a one-piece, 0.063 in. thick web to a five-piece web with 0.063, 0.050, and 0.032 in. thick sections • Substituted Al 2090 extrusion for Al 7075 on the web Z-stiffeners and longitudinal supports, but retained AL 7075 for extruded T-stiffeners at web splices • Revised machining of top and bottom chord extrusions to provide additional tie-ins at web splices • Provided accommodations, i.e., inserts in top chord and nut plates on beam web, for relocating RSS hardware to SRB Beam prior to deletion of RSS • SRB attach fitting is same configuration as LWT
GH2 Pressline Fairing and Supports	• Same configuration as LWT
GUCP Provisions	• Revised machining of flight umbilical to delete inserts and holes for routing or RSS harnesses after RSS deletion • Remaining configuration is same as LWT

SLWT DCR Baseline Design - Summary

Intertank Changes (continued)

Item	SLWT
RSS Component Box	• Panel was deleted on LWT but mounting provisions were retained. Mounting structures were deleted by design for SLWT
Access Door	• Same configuration as LWT
LO2 Feedline Fairing and Supports	• LO2 Feedline Fairing is same configuration as LWT • Substituted AL 2090 for AL 2024 on LO2 Feedline Fairing Support Plates and retained original thickness
Pressline and Cable Tray Support Brackets	• Same configuration as LWT
LO2/LH2 Cable Tray Egress Fairings and Supports	• Same configuration as LWT
RSS Antenna Ground Plane and Supports	• RSS deletion approved prior to actual ground plane installation on panels 2 and 7 but supports were installed • Clips and brackets were removed and holes reworked with blind fasteners
Aerovents	• Same configuration as LWT
RSS Cross Strap Fairings	• Same configuration as LWT

SLWT DCR Baseline Design - Summary

Intertank Changes (continued)

Item	SLWT
LO2 Feedline Support Rod	• Same configuration as LWT
LO2/LH2 Electrical Disconnect Panels	• Substituted AL 2090 for Al 2024 sheet metal and retained original 0.080" thickness
Fasteners	• Revise grip lengths throughout intertank to accommodate changes in part thicknesses
Primer	• Replace chem film and primer (zinc chromate, epoxy and waterborne) with anodization from all details impacted by SLWT redesign • Applied epoxy primer to all external surfaces to which TPS would be applied
TPS	• Machine NCFI 24-124 thickness to tighter tolerances using automated machining program (early implementation on STS-90/ ET-91 for stringer panels only) • Machined NCFI 24-124 thickness to tighter tolerances thrust panels
Propulsion/ Electrical	• Removed spare wires in harnesses

SLWT DCR Baseline Design - Summary

LH2 Tank

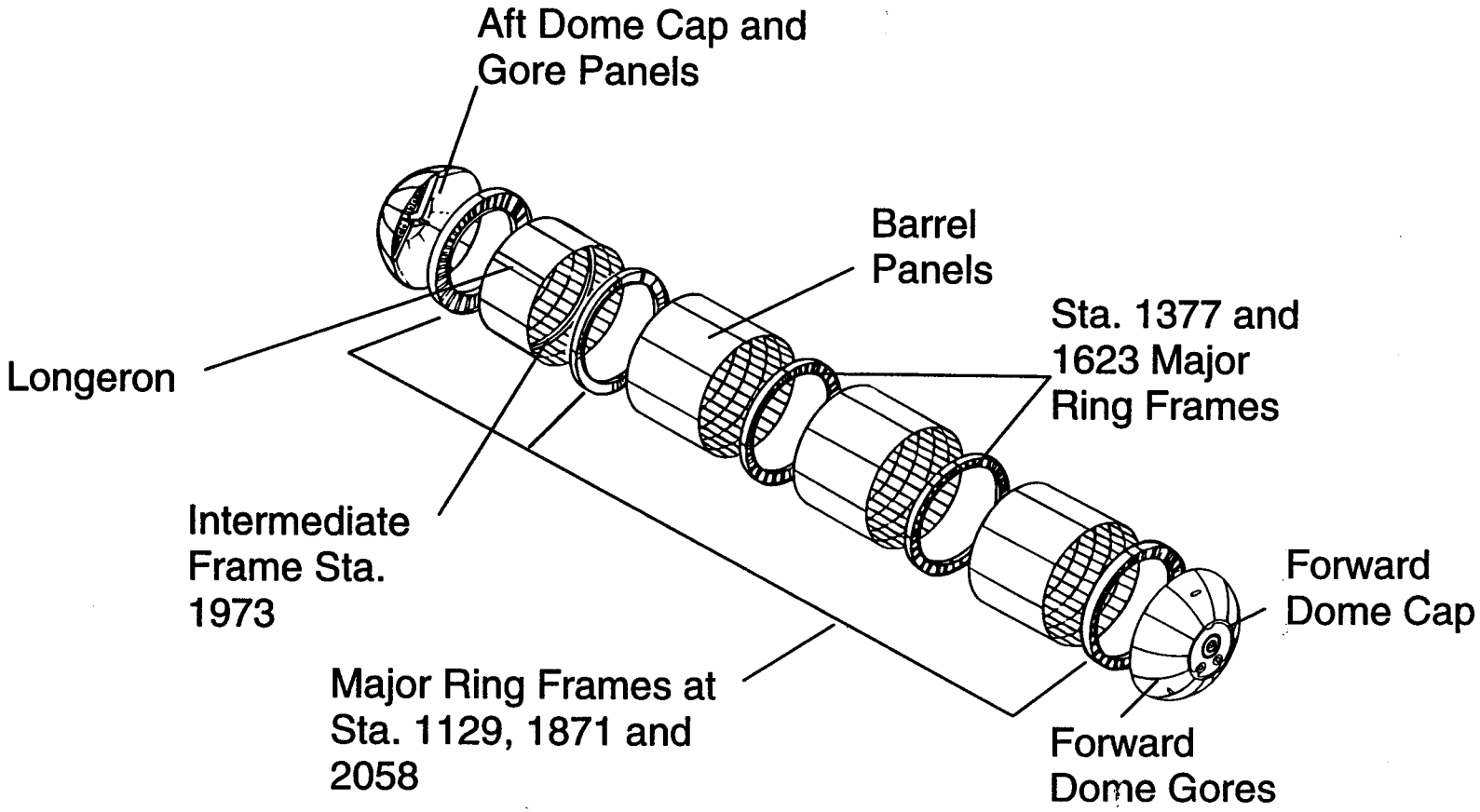

SLWT DCR Baseline Design - Summary

LH2 Tank

Item	SLWT
Fwd Dome Cap	• No material change, Al 2219 LWT and SLWT • Resize membrane thickness and weld land thicknesses • Membrane offset 0.04" from center of peripheral weld land
Fwd Dome Gores	• Material substitution Al 2195 for Al 2219 • Resize weld land thicknesses
Manhole, Vent Valve and Electrical Penetration Fittings	• Same configuration as LWT
Manhole Cover	• Same configuration as LWT
LH2 Internal Mast	• Same configuration as LWT
Sta. 1129 Ring Frame	• Outer chord material substitution, Al 2195 for Al 2219 • Resize Al 2024 Frame Webs • No change to Al 2024 Inner Chords and T-Stiffeners
Sta. 1377 and 1623 Intermediate Ring Frames	• Material substitution, Al 2195 for Al 2219 • Resized web thickness

SLWT DCR Baseline Design - Summary

LH2 Tank (continued)

Item	SLWT
Sta. 1871 Ring Frame	• No change except web thickness reduced • No material changes - Al 2219 Outer Chords; Al 2024 Webs, Stiffeners and Inner Chords
Sta. 2058 Ring Frame	• Outer chord taper at Y axis chord joints reduced to facilitate welding • Counterbore for upper aft SRB fittings deepened • Resized web thicknesses • No material changes - Al 2219 Outer Chords; Al 2024 Webs, Stiffeners and Inner Chords; Al 2219 Fittings
Sta. 1973 Intermediate Ring Frame	• Material substitution Al 2195 for Al 2024 inner and outer chords • Resize segment splices • Redesign webs and stiffeners • Resize attachment fittings • Redesign machined fittings at 30 locations
Sta. 1254, 1500, 1711, 1782, 1853, 1888, 2038 Intermediate Ring Frames	• Not used on SLWT - Eliminated as part of LH2 Barrel redesign to orthogrid

SLWT DCR Baseline Design - Summary

LH2 Tank (continued)

Item	SLWT
Frame Stabilizers	• Redesigned to interface with orthogrid panels
Barrel Panels	• Material substitution, Al 2195 for Al 2219 • Replace T-stiffened stringer panels with orthogrid pattern • Eliminate seven (7) internal intermediate frames • Redesign Barrel No. 1 to accommodate resized Sta. 1973 Intermediate Frame
Longeron	• No material change, Al 2219 Forging • Redesign forward end to prevent weld tool interference
Aft Dome Gores	• Material substitution, Al 2195 for Al 2219 on 11 of 12 gores. Gore with LH2 Feedline and Recirc line interfaces remained Al 2219 • Resize membrane and/or weld land thicknesses on all gores • Eliminated chem-milled ribs
Aft Dome Cap	• Material substitution, Al 2195 for Al 2219 • Resize membrane and weld land thicknesses
Manhole Fitting	• AL 2219 Forging LWT and SLWT • Resize fitting weld land

SLWT DCR Baseline Design - Summary

LH2 Tank (continued)

Item	SLWT
Siphon Fitting	• Redesign Siphon Fitting to eliminate manhole opening for screen installation • Al 2219 Plate for LWT and SLWT • Resize fitting weld land
LH2 Recirculation and Feedline Fittings	• Same configuration as LWT
Manhole Cover	• Same configuration as LWT
LH2 Anti-Vortex Baffle	• Redesigned and added new vibration insulator for cut-off sensors
LH2 Internal Feedline Supports	• Same configuration as LWT
GH2/GO2 Pressure Line, Cable Trays and Covers, Supports	• Same configuration as LWT
LO2 Feedline Support	• Same configuration as LWT

SLWT DCR Baseline Design - Summary

LH2 Tank (continued)

Item	SLWT
TPS	• Minimize NCFI 24-124 thickness on tank sidewalls • Thick/thin spray application (early implementation on ET-88/STS-86) • Revised apex closeout for siphon manhole cover deletion
Propulsion/ Electrical	• Perform delta qualification on GH2 pressure transducers • Perform delta qualification on GH2 pressurization line • Perform delta qualification on LH2 cut-off sensors • Revise attachment bracket on GH2 pressure line to LH2 Fwd Dome • Remove spare wires in harnesses • Redesign LH2 cut-off sensor mounting bracket with vibration isolators • Perform delta qualifications on electrical feed-thru connector

SLWT DCR Baseline Design - Summary

Interface Hardware

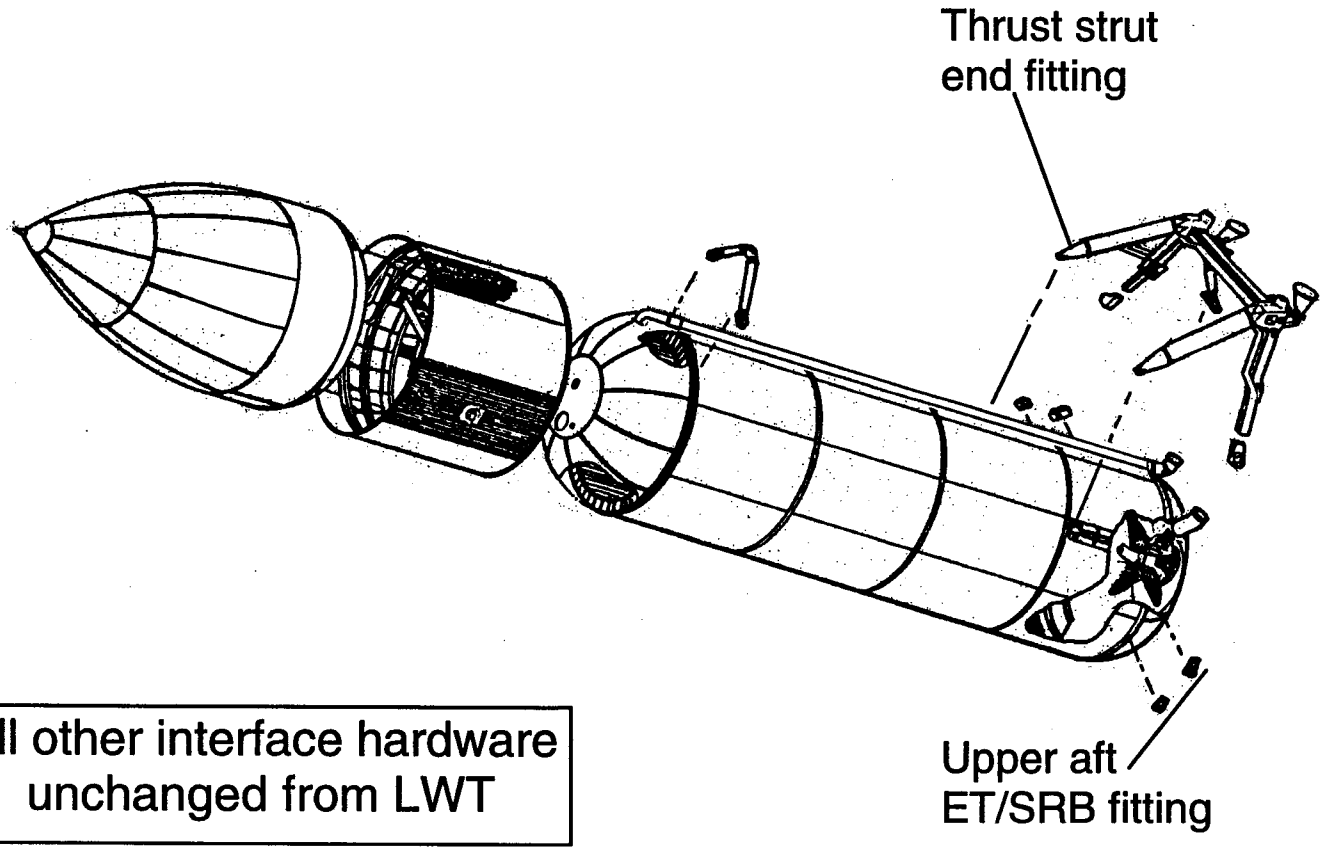

All other interface hardware unchanged from LWT

SLWT DCR Baseline Design - Summary

Interface Hardware

Item	SLWT
Thrust Strut and End Fitting	• Modified shims and assembly technique for improved producibility
Upper Aft ET/SRB Fitting	• Increased length of shear pin in machining of titanium
Fwd ET/Orbiter Bipod Strut Yoke and Fitting	• Same configuration as LWT
Fwd ET/SRB Fitting	• Same configuration as LWT
Lower Aft ET/SRB Fitting	• Same configuration as LWT
Diag/Vert Strut Tank Fitting	• Same configuration as LWT
Vert Strut and End Fitting	• Same configuration as LWT
Diagonal Strut	• Same configuration as LWT
Crossbeam with Feedline Support	• Same configuration as LWT

SLWT DCR Baseline Design - Summary

Interface Hardware (continued)

Item	SLWT
ET/Orb Ball Fitting	• Same configuration as LWT
GH2 P/L Fairing	• Same configuration as LWT
GO2 and GH2 P/L Supports and Guide Rails	• Same configuration as LWT
Vert Strut/SRB, Crossbeam and Umbilical Cable Trays	• Same configuration as LWT
Upper Aft ET/SRB Fairings	• Same configuration as LWT

SLWT DCR Baseline Design - Summary

- All design changes presented and accepted at DCR
- All design issues have been successfully resolved
- Design enhancements to improve producibility by eliminating the challenges encountered on ET-96 have been incorporated in subsequent effectivities
- Baseline design was assessed against the FMEA/CIL, Hazards Analysis Reports, and ICDs
  - Documents updates were accomplished
- Certification paper (HCSs and COQs) has been submitted/approved

SLWT DCR Baseline Design is acceptable for flight

Agenda

• Introduction	Terry Hibbard
• ***SLWT Overview***	
– System Requirements	Louis Palermo
– Material and Process Development	Don Bolstad
– DCR Baseline Design Overview	Jim McAllister
– ***Verification/Acceptance***	***Mike Quiggle***
– NCD Reviews	Robert Pontiff
– DCR Summary	Don Bolstad
• Post-DCR Design Changes	Jim Feeley
• KSC Processing	Steve Lim
• SLWT Tanking Test	Terry McKeough
• SRM&QA Assessment	Steve Copsey
• Special Topic	Jim Feeley
• Certification Status	
• Mission Unique Assessment	
• Readiness Statement	

Verification Overview

- Ground rule - Structural verification is demonstrated by either test or flight history of the current LWT.

- Methodology - Verification Team reviewed each structural subassembly and associated failure modes. Each failure mode verified by test or flight history.

- Result was a rigorous and multifaceted verification program.

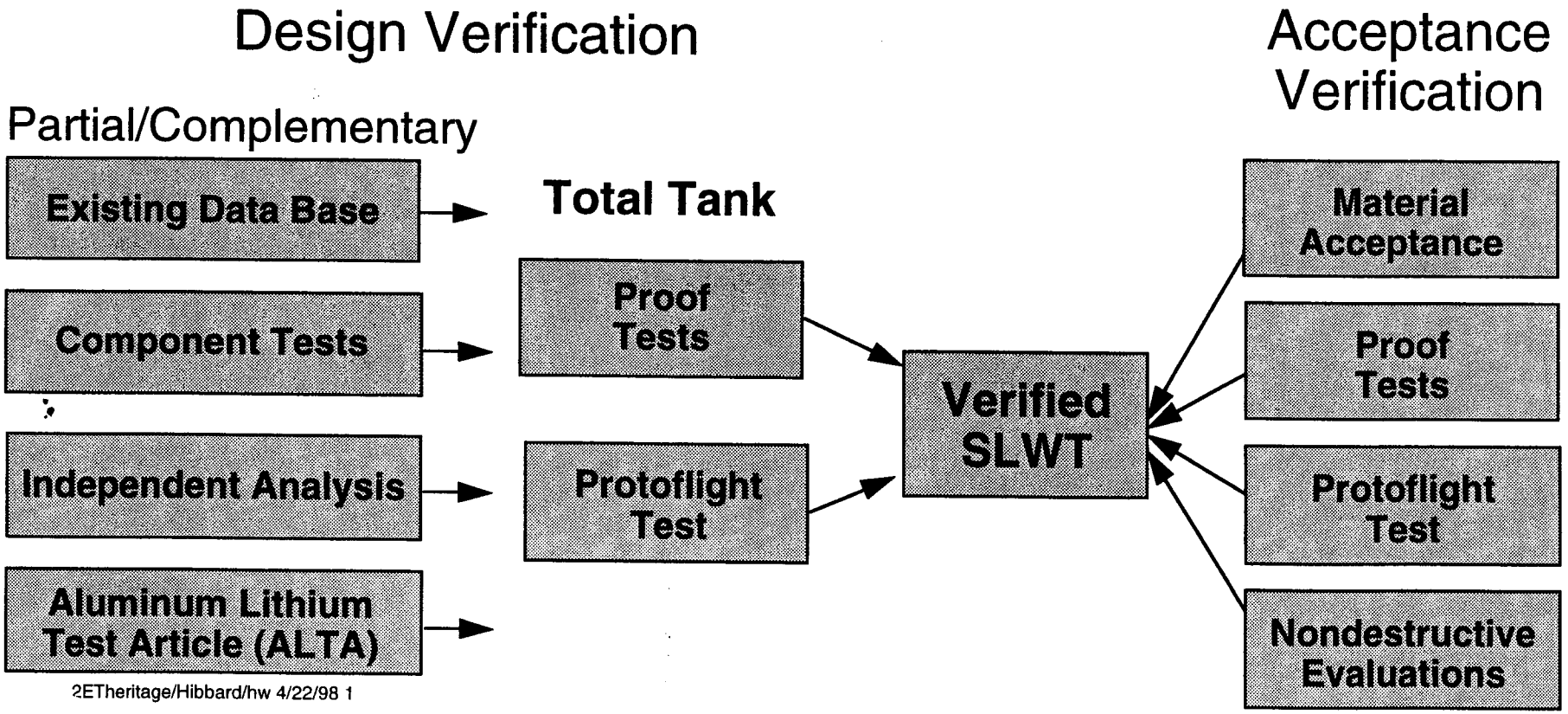

2ETheritage/Hibbard/hw 4/22/98 1

Verification Component Testing

- Existing Data Base
  - The team utilized the wealth of test and flight data from the Standard Weight Tank (SWT) and current LWT program.
    - -- Maintained existing ring frame stiffnesses, thus protecting applicability of SWT general stability testing.
    - -- Maintained LWT thicknesses in areas where testing was not reasonable given the program constraints. Example: LO2 tank aft ogive regions critical for flight stability.
- Component Testing
  - Targeted specific design and/or material changes with a component test.
  - Total of 13 different subassembly tests performed, many with 2 or more articles of different configurations. Examples:
    - -- Intertank skin-stringer/joint compression tests
    - -- Frame beaded web tests
    - -- Cryogenic environments test
  - Component testing was typically performed to capability.

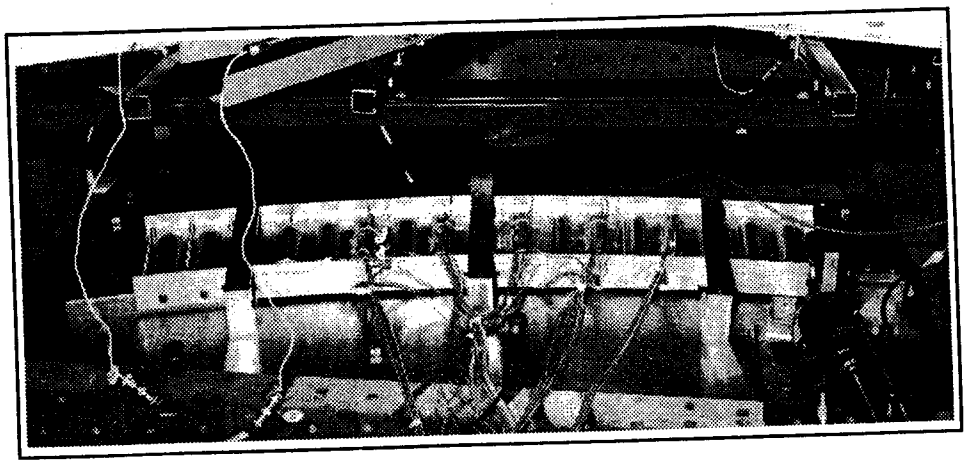

Verification Component Testing

General Structural Verification Tests

Test	Remarks
• Biaxial	Results show expected results
• Fillet weld	• Large margins shown • Allowables testing complete
• Stress concentration	• Tested both thick and thin 2195 material • Critical designs fail in other than concentration areas
• Insert pull	• Tested at ambient at cryogenic temperature • One test included cryogenic and cyclic load • All tests developed strength of bolts

PAUL'S QUESTION ANSWERED

Verification Component Testing

LO2 Tank Structural Verification Tests

Test	Remarks
• Station 745 frame web	0.025" thickness web carried 139% DLL
• Slosh baffle web	0.016" thickness web carried 285% DLL

Verification Component Testing

Intertank Structural Verification Tests

Test	Remarks
• Skin-stringer	
– Compression	• Formed skin-stringer panel carried 158% DLL but exhibited skin buckling below limit load • Skin thickness increased • Extruded skin-stringer panel carried over 200% DLL
– Joint	Incorporated into above skin-stringer tests, and successfully demonstrated
• Intermediate frame web	• 0.032" thickness web carried 175% DLL • 0.025" thickness web carried 247% DLL
• Aft thrust panel compression	Carried over 200% DLL prior to failing
• Crossbeam web	0.032" and 0.050" thickness webs carried greater than 200% DLL

Verification Component Testing

LH2 Tank Structural Verification Tests

Test	Remarks
• LH2 barrel panel	
– Compression stability	• Failure loads 1% to 6% above predictions that incorporated actual imperfections • Unpressurized stability analysis methodology verified
– Load distribution demonstration	• Incorporated in above test • Internal loads prediction verified
– Hoop tension	Carried 148% DLL
• Cryogenic environments	• Initial specimen tested to 113% DLL • Failure analysis showed test requirements were overly severe due to analysis unconservatism • Redesign and retest demonstrated ultimate load

LH2 Cryo Effects Testing

ALL OTHER DESIGN APPLICATIONS WERE REVIEWED AND CORRECTED

- LH2 Cryo Effects Test
  - Panel retest demonstrated success criteria @ -423°F of:
    - -- Al 2195 initial and repair welds
    - -- Stress concentrations
    - -- Biaxial effects
    - -- Thermal Protection System (TPS) configuration on barrels
  - Panel was redesigned following initial failure at 10% below ultimate.
  - Failure was traced to unrepresentative load distribution based on coarse mesh NASTRAN model.
  - Review was conducted and verified that no similar issue existed with SLWT models.
  - An additional test to verify LH2 aft dome TPS configuration was also successfully conducted.

- LH2 Combined Environments Test
  - Panel retest demonstrated success criteria @ -423°F of:
    - -- Stress concentrations
    - -- Biaxial effects
    - -- TPS configuration/LH2 aft dome cap (ET-96 only)
  - Inadvertent compression applied to panel during the final step of unloading and caused panel to buckle and fail.
  - Test procedure and setup were modified to avoid the application of compression loads during unloading.

LH2 Cryo Test Set-up

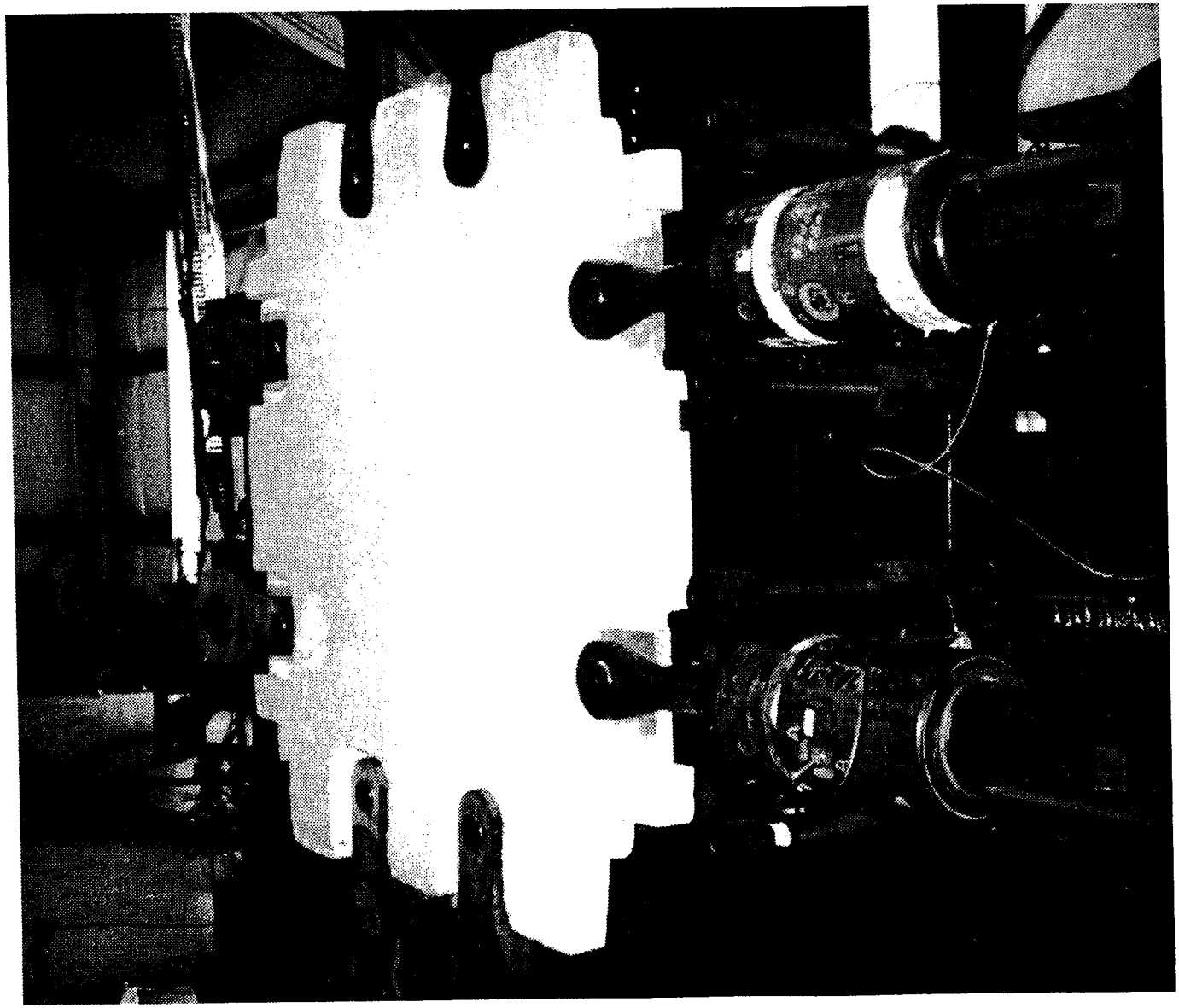

Verification Secondary Component Tests

Secondary Structure/Components Verification Tests

Test	Remarks
• Vibration	
– Gulton pressure transducer qualification	Successful
– 32L2 flex hose qualification	Successful retest with refined environments
– GH2 pressure line forward flex qualification	Successful
– GH2 pressure line aft elbow qualification	Successful
– ECO sensor environment	Successful retest with isolators
– LH2 siphon and anti-vortex baffle hardware qualification	Successful test with clevis redesigned and radius block added
– ECO sensor isolator qualification	Successful
• Structural	
– LO2 tank cable tray and pressure line support brackets	Successful
– LH2 tank cable tray and pressure line support brackets	Successful

Verification TPS Test

Location	TPS	Verified By			Status
		C/E	Cryoflex	Wide Panel	
LO2 Ogive	NCFI 24-124	Sim to C/E "1A"; In conjunction w/ Wide Panel	Yes	Yes	Complete
LO2 Barrel	NCFI 24-124	Sim to C/E "1A"; In conjunction w/ Wide Panel	Yes	Yes	Complete
LO2 Aft Dome	SS-1171	Sim to C/E "1A"; In conjunction w/ Wide Panel	Yes	Yes	Complete
Intertank	NCFI 24-124	Sim to C/E "1A" and LWT C/E "HH"	Yes	Yes	★ Complete
LH2 Fwd Dome	SS-1171	Sim to C/E "1A"; In conjunction w/ Wide Panel	Yes	Yes	Complete
LH2 Barrel	NCFI 24-124 SS-1171	C/E "1A"	Yes	Yes	Complete
LH2 Aft Dome	NCFI 24-57	C/E "2A"	Yes	Yes	Complete
LH2 Aft Dome Cap	NCFI 24-57/ SLAm SS-1171/ SLAm SS-1171/SLAs	C/E "3"	Yes	No	Complete

★ IPA OPEN – DEFICIENCY IN ANALYSIS AND TEST (DID NOT TEST RIBBED PANEL

Verification Independent Analysis

- Independent Analysis
  - The test based ground rule was deviated from in two areas.
    - -- LO2 tank aft ogive and barrel in areas critical for stability.
    - -- Aft end of the Intertank thrust panel critical for stability.
  - Deviations were allowed on a case by case basis with additional requirements imposed.
    - -- Maintain analytical factor of safety = 2.0 (vs. the required design factor of 1.25 - 1.40)
    - -- Perform additional independent analysis.
  - Independent analysis was performed by Marshall Space Flight Center for the thrust panel, and by Langley Research Center for the LO2 tank.
  - Analyses were correlated to test results.
    - -- Aft end of thrust panel was tested to failure under axial loads.
    - -- LO2 tank analysis was correlated to the forward ogive buckle in the SWT Ground Vibration Test Article.

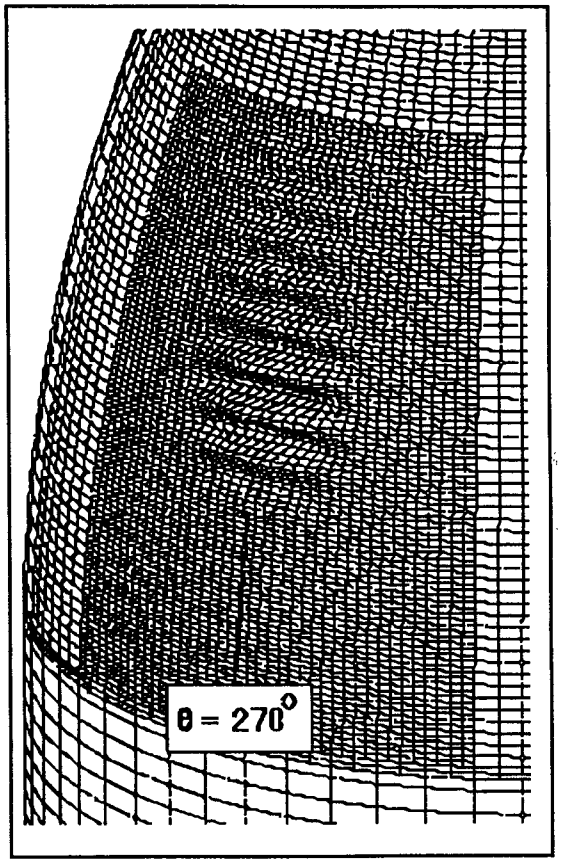

Verification ALTA Testing Results

- Aluminum Lithium Test Article (ALTA)
  - ALTA included two major pieces of SLWT hardware.
    - -- Barrel Section representative of LH2 tank barrels 3 and 4, as well as the panels on the -Z and ± Y axis of barrels 1 and 2.
    - -- LO2 aft dome
  - ALTA provides a key element in the verification of the SLWT LH2 Tank.
    - -- Demonstrated strength of LH2 barrels.
    - -- Demonstrated stability allowables and stability capability of the LH2 orthogrid panels.
    - -- Demonstrated stability allowable of LO2 aft dome.
  - Loads applied to ALTA consisted of:
    - -- Pneumatic pressurization
    - -- Axial loads
    - -- Bending moments
    - -- Shear loads
    - -- Water and high density fluid (HDF) aft dome fill (HDF = 35 lb/gal)

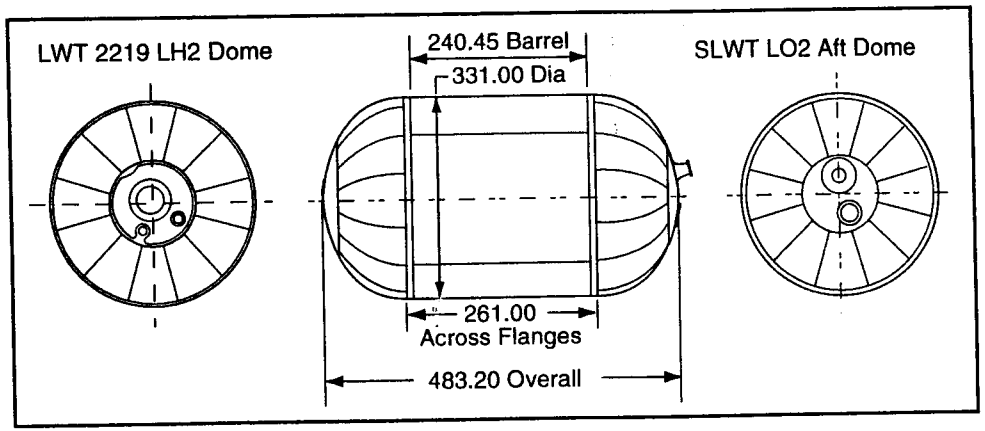

Verification ALTA Testing Results

- The ALTA successfully withstood a series of test conditions.
  - -- Five influence coefficient cases.
  - -- One water fill and one HDF test of the LO2 aft dome.
  - -- Four barrel panel load cases to limit, ultimate and capability load.
    - -- Post Staging case , +Z axis panels
    - -- Liftoff case, +Z and ±Y axis panels
    - -- Two Prelaunch cases, -Z and ± Y axis panels
- The ALTA demonstrated the adequacy of the LO2 dome stability and the robust design of the orthogrid barrel panels.

Flight Condition	Design Ultimate Load Condition		Capability Load Condition	
	Pressure (psi)	% of Limit Body Loads	Pressure (psi)	% of Limit Body
Liftoff	17.6	140	17.6 9.6	175 140
Prelaunch	0.0	129.5	0.0	162
Post Staging	31.8	126.5	31.8 20.0 * 9.0 **	146 126.5 126.5

* Denotes approximate condition at which non-linearity was observed in the gages.

** Denotes condition at which final collapse occurred.

Verification Protoflight and Proof Testing Results

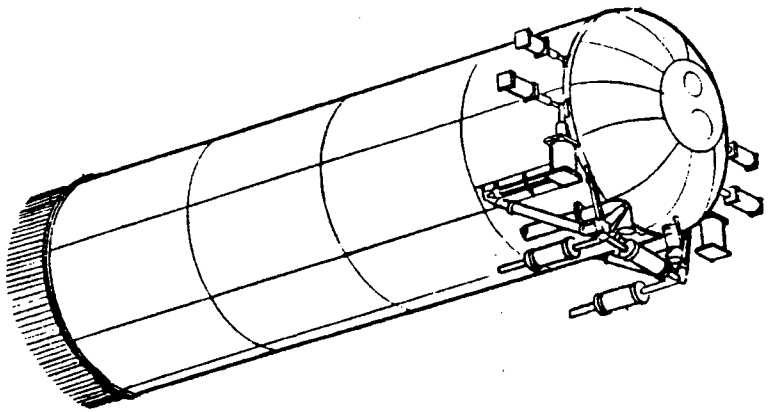

- Protoflight Tests
  - Every LH2 tank is protoflight tested to 115% design limit load for two test conditions.
    - -- Stability of the longeron region in barrels 1 and 2
    - -- Stability of the aft dome
  - ET-96 LH2 Tank was heavily instrumented during protoflight testing and was correlated to analytical predictions.

- Proof Tests
  - Every LO2 and LH2 tank is proof tested.
    - -- LO2 proof is an ambient temperature hydrostatic test with the addition of a vacuum under the aft dome.
    - -- LH2 proof is an ambient temperature gaseous nitrogen test with mechanical loads applied at the aft Orbiter and Solid Rocket Booster interfaces.

Verification

LO2 Tank Factors of Safety

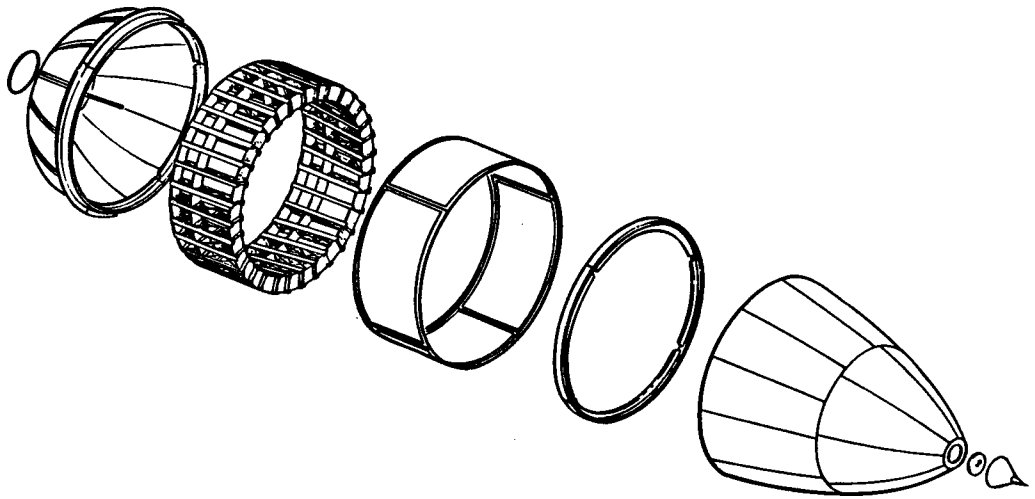

Verification

LO2 Tank Factors of Safety - Shell

	LWT						SLWT					
Component	**Critical Design Case**	**Design Temp (°F)**	**Limit σ (ksi)**	**Failure Mode**	**SF**	**MS**	**Critical Design Case**	**Design Temp (°F)**	**Limit σ (ksi)**	**Failure Mode**	**SF**	**MS**
Forward Ogive	Proof	70	52.9	Tension Ult.	1.00	0.19	Proof	70	51.8	Tension Ult.	1.00	0.51
	AB302 t = 152.1	100	30.2	Tension Ult.	1.26	0.62	PEHU003 t = 338.1	209	31.9	Tension Ult.	1.26	0.70
	ETMA305 t = 60.378	-297	-3.8	Stab. Ult.	1.26	0.00	W11FH47 C t = 2.0	-297	-4.0	Stability Ult.	1.26	0.01
Aft Ogive	Proof	70	55.3	Tension Ult.	1.00	0.14	Proof	70	72.3	Tension Ult.	1.00	0.08
	LO2103 t = 7.214	-297	46.6	Tension Ult.	1.40	0.22	LDI621AE t = 70.579	-297	60.7	Tension Ult.	1.40	0.07
	HWF590A E t = 63.442	-297	-3.3	Stab. Ult.	1.40	0.07	LHG167AE t = 63.723	-297	-3.5	Stability Ult.	1.40	0.00
Barrel	Proof	70	55.3	Tension Ult.	1.00	0.14	Proof	70	67.0	Tension Ult.	1.00	0.16
	LO2103 t = 7.204	-297	49.9	Tension Ult.	1.29	0.14	LDI621AE t = 70.579	-297	67.1	Tension Ult.	1.29	0.00
	HWF590A E t = 63.442	-297	-5.1	Stab. Ult.	1.40	0.03	LHG838BE t = 64.289	-297	-5.4	Stability Ult.	1.40	0.00
Dome	Proof	70	49.6	Tension Ult.	1.00	0.27	Proof	70	68.2	Tension Ult.	1.00	0.14
	BA t = 90.0	-297	49.3	Tension Ult	1.26	0.22	PEBA002 t = 90.1	-297	63.7	Tension Ult	1.26	0.03
	3 g End of Flight	-297	-7.8	Stab. Ult.	1.26	0.50	3 g End of Flight	-297	-7.6	Stability Ult.	1.26	0.00
Dome Cap	Proof	70	44.0	Tension Ult.	1.00	0.26	Proof	70	48.5	Tension Ult.	1.00	0.30
	BA t = 90.0	-297	41.5	Tension Ult.	1.26	0.22	PEBA002 t = 90.0	-297	47.8	Tension Ult.	1.26	0.26

Verification

LO2 Tank Factors of Safety - Weld

	LWT				SLWT			
Weld ID	t (in)	Critical Design Case	Design Temp (°F)	Limit O/F σ (ksi)	t (in)	Critical Design Case	Design Temp (°F)	Limit O/F σ (ksi)
O1	0.140	Proof	70	10.5	0.140	Proof	70	10.2
		Staging t = 150.0	70	4.2		PEHU003 t = 338.0	209	4.3
OFO	0.140	Proof	70	25.6	0.140	Proof	70	24.0
	0.220	AB305 t = 238.0	95	14.3	0.230	PEHU003 t = 338.0	123	13.7
O2	0.220	Proof	70	16.2	0.230	Proof	70	17.3
		BA304 t = 90.0	-225	13.1		PEBA002 t = 90.0	-203	14.5
OAO	0.220	Proof	70	25.6	0.230	Proof	70	24.0
	0.360	LO2103 t = 7.214	-297	21.4	0.360	LDI621AE t = 70.579	-297	17.8
O3	0.360	Proof	70	22.5	0.360	Proof	70	24.5
		LO2028 t = 7.598	-297	20.5		LDI621AE t = 70.579	-297	21.6
O4	0.360	Proof	70	17.6	0.360	Proof	70	18.6
		LO2028 t = 7.598	-297	16.4		LDI621AE t = 70.579	-297	15.8
OB	.36-.387	Proof	70	25.1	0.485	Proof	70	23.2
		LO2103 t = 7.204	-297	23.7		LDI621AE t = 70.579	-297	22.7
O5	0.387	Proof	70	17.4	0.387	Proof	70	18.4
		HWF590AE t = 63.442	-297	16.4		LDI621AE t = 70.579	-297	18.0
OAF	0.320	Proof	70	21.4	0.320	Proof	70	24.6
		BA302 t = 74.0	-297	19.9		PEBA001 t = 78.0	-297	23.1

Verification

Intertank Factors of Safety

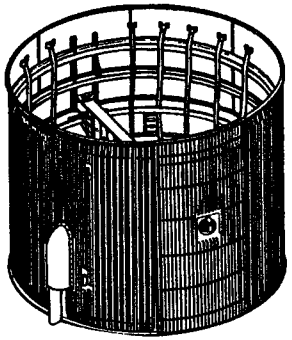

	LWT						SLWT					
Component	**Critical Design Case**	**Design Temp (°F)**	**Limit σ (ksi)**	**Failure Mode**	**SF**	**MS**	**Critical Design Case**	**Design Temp (°F)**	**Limit σ (ksi)**	**Failure Mode**	**SF**	**MS**
Skin/Stringer Panels	NFI001SE t = 71.279	70	49.3	Panel Buckling Ult.	1.29	0.00	SDI103AE t = 70.362	70	49.3	Panel Buckling Ult.	1.29	0.00
Main Frame	LO2096 t = 5.279	70	72.3	Web Buckling	1.40	0.16	B10FL34V t = 5.20	70	72.3	Web Buckling	1.40	0.08
Crossbeam	EYH12WE t = 70.0	70	72.3	Tension Ult.	1.40	0.15	LHH894CE t = 69.64	70	72.3	Tension Ult.	1.40	0.10
Intermediate Frames	BA310 t = 76.0	70	71.6	Web Buckling	1.29	0.14	LHH894CE t = 69.4	70	71.6	Web Buckling	1.40	0.06
Thrust Panels	NFI001SE t = 71.279	70	68.8	Shell Buckling Ult.	1.27	0.00	LDI621AE t = 70.579	70	68.8	Shell Buckling Ult.	1.27	0.07

ACTION
ADD CHART
TO SHOW
ADDED STRU
MS SOFTER
IN IF

Verification

LH2 Tank Factors of Safety

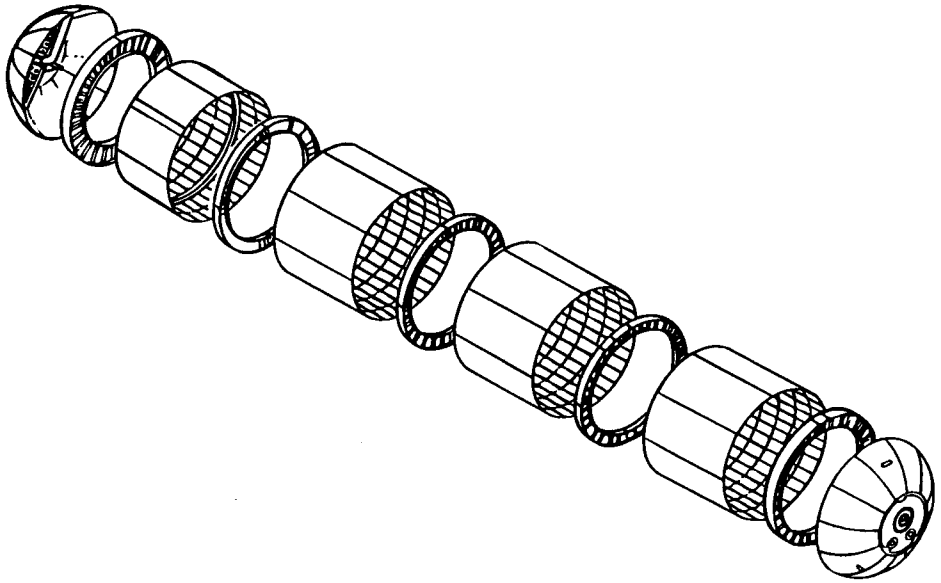

Process Changes	Caused by Design	Caused by Process	
Δ ET-91 to ET-96		**Eng. controlled**	**Other**
• Welding			
– STP 5507 (created for SLWT) (GTA process for fillet welds, weld repairs, back fills)		X	
– STP 5508 (created for SLWT) VPPA		X	
– STP 5509 (created for SLWT) SPAW		X	
– Backside shielding		X	
– 4043 weld wire		X	
– All weld tools revised; new power supplies on most tools; new weld certs		X	X
– New 5162 weld tool			X
• Weld repairs			
– MRB each repair		X	
(1) – Planish all repairs and verify shrinkage recovery		X	
– Wide panel tests to verify all repairs		X	
– No sanding of weld bead without MRB authority		X	
• 2195 Plate			
– EQTP-1102 lot acceptance testing SIM service		X	
– STP 1007, 2195 CAPS forming		X	
– STP 1008, dome and ogive forming		X	
– STP 1010, forming LH2 barrel panel	X	X	
– STP 1011, forming LO2 barrel panel	X	X	
– STM 11A1, 2195 plate		X	
• 2195 extrusions			
– STP 1006, Fabrication and test of 2195 extrusions		X	
– STM 31A1, 2195 extrusions		X	

(1) STILL NOT YET COMPLETED A CONTROLLED PROCESS

PRELIMIINARY

Process Changes	Caused by Design	Caused by Process	
Δ ET-91 to ET-96		**Eng. controlled**	**Other**
• 2090 sheet			
– STP 1009, forming	X	X	
– STM 11A2, 2090 plate		X	
• TPS			
– Machine I/T thrust panel ribs	X		
– Thick/thin	X	X	
– Vacuum-bagging for SLA bonding		X	
• Fabrication*			
– STP 2001 (revised for SLWT), added rivet instl in Al-Li, MRB req'd for coining, prohibited punched holes in Al-Li	X		
– STP 2210 (revised for SLWT), prohibited staking of bearings into Al-Li alloys	X		
– Walking loads reqmts, new pads for orthogrid barrel panels, extended platforms to minimize foam damage	X		
– STP 6514, Bonded ECO sensor wires to inside of LH2 aft dome	X		
– New ogive and LH2 barrel trim tools, new weld repair tools for domes and ogives			X
– STP 6519, Appendix II, Bonding strain gages for proof test		X	
– STP 6519 amend 1, strain gages bonding on ALTA		X	
– STP 6514 - Adhesive wire bonding		X	
• Change freon cleaning solvent to MEK		X	
• Revised pull test configuration for adhesive acceptance		X	
– Revised nose cone installation procedures **			X
• Great stufff injected after installation			
• Teflon tape vs. aclar parting material			
• Tighter shimming			
– Revise application point for double-sided tape	X		

PRELIMIINARY

Process Changes	Caused by Design	Caused by Process	
Δ ET-91 to ET-96		**Eng. controlled**	**Other**
• Finish*			
– Anodize SLWT I/T ISL (primer deleted), anodize/prime SLWT I/T OSL	X		
• Inspection			
– Penetrant, implement Class III on SLWT (STP 2501)	X		
– 100% post-proof inspection on ET-96	X		
– New weld acceptance manual (80900000069)	X		
– Dual eyes on SLWT hdwe penetrant inspection		X	
– Use of white light inspections		X	
– No defect calls approval by MRB		X	
– Arbitration approved by MRB post -proof		X	
– STP 2507, (penetrant inspection of 2195 Al-Li alloy - new spec)		X	
– Angle X-Ray shots		X	
– Shrinkage measurements for planish recovery		X	
– Ensure correct etch prior to penetrant	X		
• Testing			
– Revised LH2 proof test	X	X	
• New load condition		X	
• Protoflight test		X	

* All non Al-Li specific STP's are periodically included in pre-flight reviews. Last presented at STS-87/ET-89 review
** Produceability change

PRELIMIINARY

Verification

LH2 Tank Factors of Safety - Shell

	LWT						SLWT					
Component	**Critical Design Case**	**Design Temp (°F)**	**Limit σ (ksi)**	**Failure Mode**	**SF**	**MS**	**Critical Design Case**	**Design Temp (°F)**	**Limit σ (ksi)**	**Failure Mode**	**SF**	**MS**
Forward Dome	Proof	70	49.3	Tension Ult.	1.00	0.27	Proof	70	49.3	Tension Ult.	1.00	0.48
	AB002 t = 729.0	70	44.0	Tension Ult.	1.25	0.15	PEAB007 t = 729.0	70	44.0	Tension Ult.	1.25	0.33
	W3FL47C t = 1.95	70		Stability Ult		0.00	W11FL47C t=1.98	70		Stability Ult		0.00
Barrel 4	Proof	70	49.5	Tension Ult.	1.00	0.27	Proof	70	72.3	Tension Ult.	1.00	0.08
							Protoflight	70	-12.2	General Stability	1.00	0.50
	AB308 t = 620.0	70	44.1	Tension Ult.	1.26	0.14	PEAB012 t = 235.0	70	62.0	Tension Ult.	1.27	0.00
							W14OL47C t = 2.66	70	-2.1	Skin Buckling Ult.	1.25	0.12
	W3KSE47 t = 2.64	70	-2.5	Stability Ult.	1.30	0.02	LO2214IS t = 7.638	-423	-10.9	Stability Ult.	1.40	0.11
Barrel 3	Proof	70	50.0	Tension Ult.	1.00	0.26	Proof	70	72.3	Tension Ult.	1.00	0.08
							Protoflight	70	-12.9	General Stability	1.00	0.30
	W7KSE47 t =4.29	70	43.3	Tension Ult.	1.30	0.12	PEAB007 t = 729.0	70	62.0	Tension Ult.	1.26	0.00
			-2.0	Skin Buckling Ult.			W11OH47D t = 2.10	70	-2.0	Skin Buckling Ult.	1.25	0.32
	W3KSE47 t = 2.64	70	-2.3	Stability Ult.	1.30	0.10	LO2199IS t = 7.648	-423	-11.4	Stability Ult.	1.40	0.08
Barrel 2	Proof	70	49.5	Tension Ult.	1.00	0.27	Proof	70	71.6	Tension Ult.	1.00	0.09
							Protoflight	70	-11.6	Stability Ult.	1.00	0.35
	W7KSE47 t = 4.29	70	43.7	Tension Ult.	1.30	0.11	PEAB007 t = 729.0	70	62.0	Tension Ult.	1.26	0.00
		70					W37KSH47 t = 1.14	70	-2.1	Skin Buckling Ult.	1.25	0.12
	PO203 t = 119.4	-423	-23.4	Stability Ult.	1.27	0.01	PEPO105 t = 117.6	-423	-12.1	Stability Ult.	1.27	0.13
Barrel 1	Proof	70	50.0	Tension Ult.	1.00	0.26	Proof	70	68.8	Tension Ult.	1.00	0.13
							Protoflight	70	11.0	Stability Ult.	1.00	0.37
	W3KSE47 t = 2.64	70	43.7	Tension Ult.	1.30	0.11	PEAB007 t = 729.0	70	62.0	Tension Ult.	1.26	0.00
							NTB752AE t = 46.082	-423	18.3	Skin Buckling Ult.	1.40	0.03
	3 Pt. Stack	70	-1.6	Stability Ult.	2.00	0.03	LO2079ES t = 7.014	-423	14.0	Stability Ult.	1.40	0.23
Aft Dome	Proof	70	50.0	Tension Ult.	1.00	0.26	Proof	70	66.0	Tension Ult.	1.00	0.11
							Protoflight	70	-5.0	Stability	1.00	0.10
	BA302 t = 235.0	-423	66.3	Tension Ult.	1.27	0.12	PEBA002 t = 90.0	-423	62.9	Tension Ult.	1.27	0.17
	W12KSH47 t = 1.82	70	-4.8	Stability Ult.	1.25	0.00	W12FH47D t = 1.84	70	-4.8	Stability Ult.	1.25	0.00

Verification

LH2 Tank Factors of Safety - Weld

	LWT				SLWT			
Weld ID	t (in)	Critical Design Case	Design Temp (°F)	Limit O/F σ (ksi)	t (in)	Critical Design Case	Design Temp (°F)	Limit O/F σ (ksi)
HFF	0.200	Proof	70	21.3	0.200	Proof	70	18.7
		BA308 t = 74.0	100	21.0		LDI545CE t = 70.629	-233	19.3
H8	0.320	Proof	70	23.5	0.320	Proof	70	25.9
		AB207 t = 460.0	100	19.8		LHI102AE t = 76.639	25	23.9
HB4	0.320	Proof	70	20.6	0.320	Proof	70	20.1
		NTB742AE t = 45.339	-423	19.4		HWB511DE t = 37.246	28	18.9
H7	0.320	Proof	70	23.5	0.320	Proof	70	28.3
		LHH137AE t = 69.516	-423	22.9		LHH134CE t = 69.776	-423	25.6
H6	0.320	Proof	70	22.8	0.320	Proof	70	28.4
		LHH141AE t = 69.616	-423	21.3		S06FH34D t = 9.12	-423	25.1
HB3	0.320	Proof	70	20.6	0.320	Proof	70	20.1
		HWI706BE t = 71.317	-423	19.1		LDI621AE t = 70.316	-423	19.2
H5	0.320	Proof	70	18.9	0.320	Proof	70	27.5
		AB308 t = 620.0	-423	19.5		LDI493AE t = 70.614	-423	24.9
H4	0.320	Proof	70	19.1	0.320	Proof	70	27.0
		LWH558BE t = 62.628	-423	19.2		LDI493AE t = 70.614	-423	24.9
HB2	0.320	Proof	70	21.8	0.320	Proof	70	21.3
		LWI546BE t = 70.609	-423	22.7		LDI557CE t = 70.636	-423	23.7
H3	0.320	Proof	70	18.5	0.320	Proof	70	21.9
		NTH410AE t = 79.948	-423	17.2		LDI557CE t = 70.636	-423	22.7
H2	0.320	Proof	70	17.9	0.320	Proof	70	21.7
		HWG592BE t = 58.832	-423	17.8		LDI621AE t = 70.316	-423	22.5
HB1	0.320	Proof	70	24.0	0.320	Proof	70	21.9
		HWI706BE t = 71.317	-423	22.6		PEBA111 t = 74.680	-423	20.2
H1	0.320	Proof	70	22.7	0.320	Proof	70	27.9
		MLH440AE t = 64.470	-423	23.5		NPH012WE t = 64.368	-423	30.8
HAF	0.200	Proof	70	26.0	0.225	Proof	70	26.7
		MLH440AE t = 64.470	-423	28.0		NPE002WV t = 53.034	-423	28.0

Acceptance Proof Test

- SLWT proof testing applies the same philosophy as used for the SWT and LWT.
- Proof tests are fracture based, i.e. They verify workmanship and ensure that the design has not been invalidated by the presence of an undetected flaw.
- Fracture Based Proof Test
  - -- Designed to prove that any undetected flaw will not grow to a size which will cause failure within four mission lives of the tank.
    - -- Ambient temperature proof stress is adjusted for the fact that the material is tougher at cryogenic conditions.
    - -- Material testing is performed on each lot of material to ensure required fracture properties.
  - -- Post proof Non-destructive Evaluation (NDE) is required for all welds not fully tested to the required stress level.
- Tank design is optimized for the existing proof levels, with the material operating near the yield strength during proof testing.
- The fracture based proof tests also provide excellent strength tests, demonstrating each tank pressure wall to a minimum of 112% limit load for the LH2 tank and a minimum of 117% limit load for the LO2 tank.

LH2 Tank Proof Test

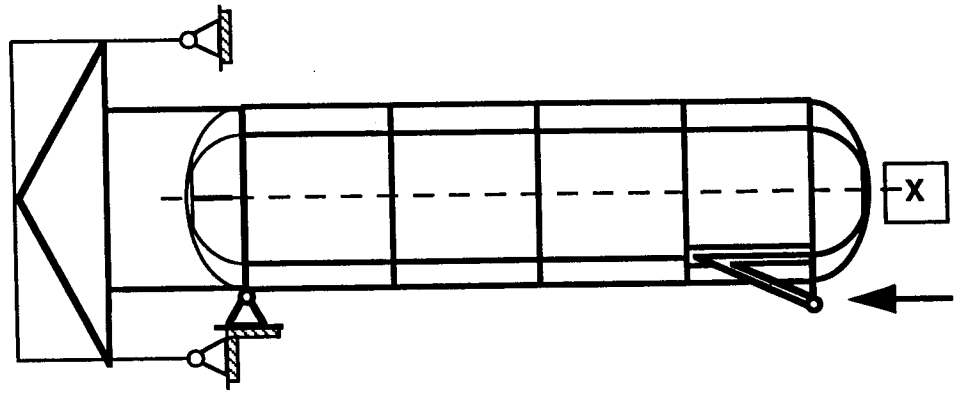

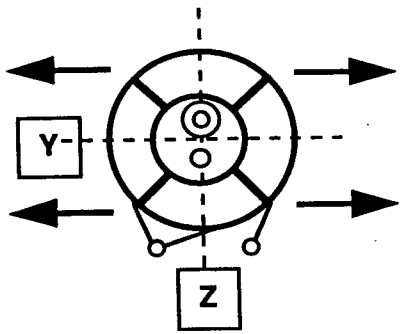

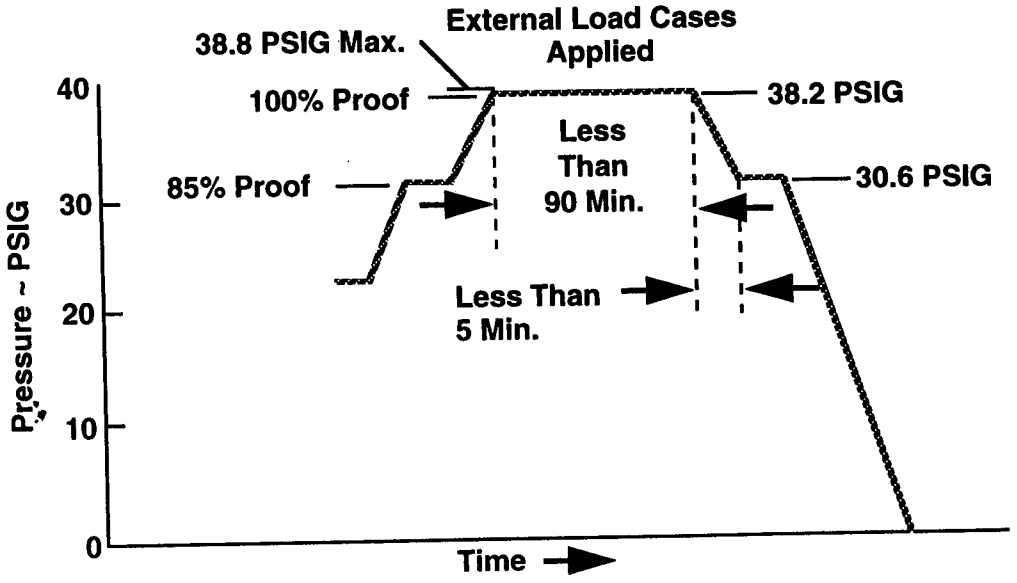

TEST PARAMETERS

- Temperature = 40° - 116°F
- Time at Proof < 90 Min.
- Test Prior to TPS Application
- Tank Pressurized With GN2
- Tank Welds - 100% Leak Check After Test, Bubble Method (22,000 Inches)
- Pressure, Temperature and Deflection Continuously Monitored
- Covers Tested Separately

LO2 Proof Test

Test Parameters

- Temperature - 40° to 116°
- Time at proof - <1.0 minute
- Test prior to TPS application
- Pressure Measured at:
  - Tank top
  - Tank bottom
  - Vacuum chamber
  - Tank Vacuum - during drain
  - XT 852.55 57.47 PSIG
    58.07
  - XT 963 70.22 PSIG
    71.02

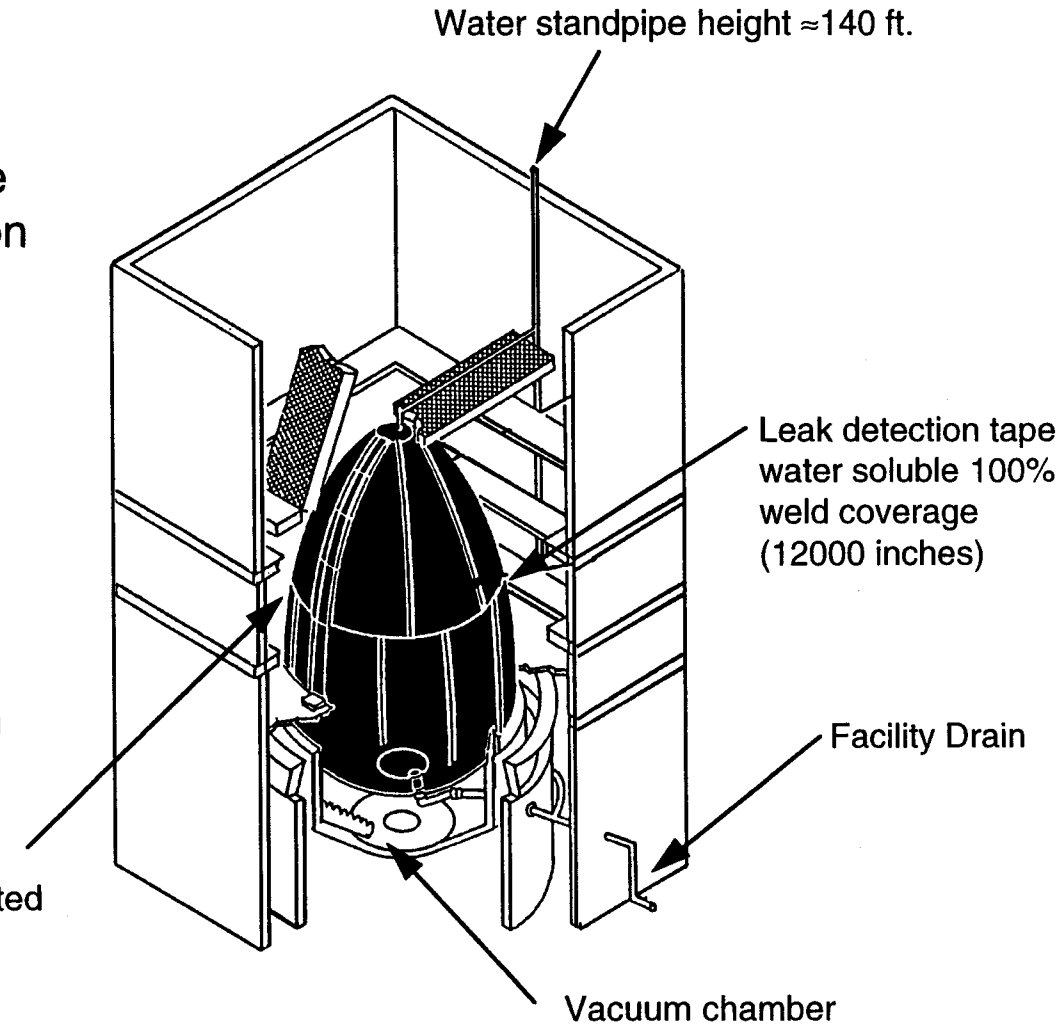

Acceptance

Post Proof Inspection Criteria

- Visual inspection of critical tank locations following:
  - Protoflight tests
    - LH2 aft dome region
    - LH2 barrel/longeron region
    - Proof tests
      - Leak check all welds
      - External shell
      - Internal structure with emphasis on
        - Ribs at +Z axis
        - Longeron region
        - Frame 1973 attachment
- NDE inspection
  - ET-96 100% X-Ray
  - 11% penetrant
    - Al 2219 Class I extrusions
    - High stress regions
  - 60% X-Ray subsequent proof tests

Verification/Acceptance Summary

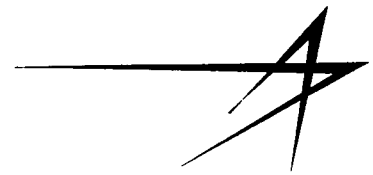

- An extensive test based design verification program was established, and has been executed, for the SLWT project.
  - ALTA, protoflight testing, and design ground rules for stability of LH2 Tank.
  - ALTA, design ground rules, and independent analysis for stability of LO2 Tank.
  - Proof Tests for fracture control and strength of LO2 and LH2 Tanks.
  - Component tests and independent analysis for stability of Intertank.
  - Component tests for frames and substructures.
- Rigorous workmanship acceptance testing consisting of material acceptance testing, proof tests, and NDE, has been established and is being executed.
- The SLWT verification program has undergone many independent reviews.
- Design testing has been completed and was highly successful.

ET-96 design is demonstrated safe to fly

Agenda

• Introduction	Terry Hibbard
• ***SLWT Overview***	
– System Requirements	Louis Palermo
– Material and Process Development	Don Bolstad
– DCR Baseline Design Overview	Jim McAllister
– Verification/Acceptance	Mike Quiggle
– ***NCD Reviews***	***Robert Pontiff***
– DCR Summary	Don Bolstad
	Jim Feeley
• Post-DCR Design Changes	
• KSC Processing	Steve Lim
• SLWT Tanking Test	Terry McKeough
• SRM&QA Assessment	Steve Copsey
• Special Topic	Jim Feeley
• Certification Status	
• Mission Unique Assessment	
• Readiness Statement	

NCD Reviews

- Standard non-conformance disposition process vs. ET-96
- ET-96 NCD reviews
  - Added reviews
  - Senior Management Review
    - LH2 tank net section stress requirement
    - LH2/LO2 proof test readiness review
    - Interpass lack of fusion
    - Improper heat-treat on LO2 feedline flanges
- Results/conclusions of NCD reviews

NCD Reviews

- Standard non-conformance disposition vs. ET-96
  - NCD disposition process for Material Review Board actions has not been structurally modified
  - Weld standard repair instructions were not used for 2195 aluminum - all repairs were approved via MRB
  - Reduced allowables from initial weld for repairs resulted in stress review of all weld repair NCDs
  - Allowables for repairs were developed through sensitivity tests and resulted in a standard definition for a repair as being a manual repair five inches long with five heats
    - Most repairs fit criteria
    - 31 out-of-family repairs were accepted via successful testing of 3 wide panels
  - Revised MRB disposition approval:

Prior to ET-96	ET-96
Technical Operations	Technical Operations
Product Assurance	Product Assurance
MSFC-NASA Safety and Mission Assurance	MSFC-NASA Safety and Mission Assurance
	MSFC-NASA Science and Engineering

NCD Reviews

- ET-96 NCD Reviews
  - Added reviews
    - Standard reviews have been performed
      - MRB approval at disposition
      - FCB review and approval of fracture issues
      - Peer reviews of stress analysis
      - Hardware Acceptance Committee prior to proof
      - Lockheed Martin NCD reassessment prior to flight
        - Reverify correct dispositions
        - Assess load changes and redefine margin if required
      - Independent audit of 100% of ET-96 weld NCD's prior to proof
        - Team comprised of "new" eyes
          - Lockheed Martin Technical Operations and Product Assurance
          - NASA-MSFC-ET Project, Science and Engineering, and Safety and Mission Assurance
        - Validated NCD process
    - Senior Management Reviews of LO2 and LH2 tank prior to proof

Senior Management Review

LH2 Tank Net Section Stress Requirement

Issue:

- Eleven lots of 2195 LH2 barrel panel plate did not meet the proof test net section stress requirement per EQTP 1102

Background/ Discussion:

- All lots of 2195 plate are required to pass simulated service testing (SST)
  - During the early stages of 2195 plate production, revisions to the SST requirement were frequent. 6 lots of 2195 plate did not meet the SST net section stress requirement in place at that time
  - Each of the 11 lots was analyzed as to actual applications and minimum requirements. All 11 plates were determined to be acceptable for both proof and flight

Disposition:

- Use as is

Senior Management Review

LH2 Tank Net Section Stress Requirement

Rationale for Flight:

- All lots passed four mission lives
- Three lots were accepted to net section stress of 72.3 ksi
- Four lots were accepted to t=1.85" net section stress of 70.9 ksi
- Remaining four lots are acceptable to specific part location
  - Panels were already machined to one-of-a-kind locations
- Proof test issue only - no safety of flight concern
  - All plates on ET-96 passed three proof tests
- Concurred by both MAF and MSFC Fracture Control Boards

Senior Management Review

LO2/LH2 Proof Test Readiness Review

Issue: Assess readiness to proof the LH2 and LO2 tanks

Background/ Discussion:

- Acceptablity of intersection welds due to susceptible microstructure and stresses
  - Tests confirmed cracking did not significantly reduce strength and during fracture testing the cracks were not the initiation point of fracture
  - Potential for cracking during proof
- Low failure stresses of SPAW initial welds on H-panels
  - Panels used to assess weld intersections
  - Three panels failed below 38 ksi on the vertical SPAW welds used to attach grip ends to the actual H-panels
  - Review of other test data determined the design value for vertical SPAW initial welds the material 0.320: or greater be 36 ksi
- NCD review confirmed acceptance of allowable reduction
- Reviewed open documents and established constraints for proof
- Identified wide panels for four non-conformance documents for the LO2 tank as a constraint to proof

Senior Management Review

LO2/LH2 Proof Test Readiness Review (continued)

Disposition:

- Acceptable to proceed to proof pending completion of wide panels and closure/disposition of documents

WIDE PANELS COMPLETE

Rationale For Flight:

- No safety of flight concern
  - Safety of proof concern only

Senior Management Review

Interpass Lack of Fusion

Issue:

Interpass lack of fusion was detected by X-Ray on an aft dome gore weld on ET-97

Background/ Discussion:

- ET-96 had no X-Ray indications and had been proofed 3 times
- This type of defect is not easily detected by X-Ray unless there is sufficient through-the-thickness component to the lack of fusion
- Ultrasonic Testing (UT) is better suited for detection; however, UT is not part of normal weld acceptance
- Review of existing test data and performance of room temperature and cryogenic tensile tests and simulated service tests verified required properties were not significantly affected unless LP is detected by X-Ray
- Production enhancements were implemented to reduce potential for LP

Disposition:

Acceptable as designed, built and inspected

Rationale for Flight:

Tests and analysis that current NDE methods are sufficient to detect any LP that would be of concern

Senior Management Review

LO2 Feedline Flange Improper Heat Treat

Issue:

- Two LO2 feedline flanges failed post-machining penetrant inspection at MAF
  - Multiple cracks on each part
  - Parts were rejected

Background:

- Eight flanges on four feedline straight sections per ET
  - Flanges are 2219 extruded aluminum
- Current inventory was provided from supplier in 1993
- Metallographic inspection of sections taken from both scrapped flanges showed evidence of overheating in the solution heat treat process
  - Requirement: 995° +/-10°F
- On-site review (3/26-27/98) of supplier's facilities revealed:
  - Flange overheating in the solution heat treat furnaces due to proximity of gas fire burners
  - Three flanges were rejected in 1993 for causes related to overheating

Senior Management Review

LO2 Feedline Flange Improper Heat Treat - *Issue*

LO2 Feedline (Pre-Formed)

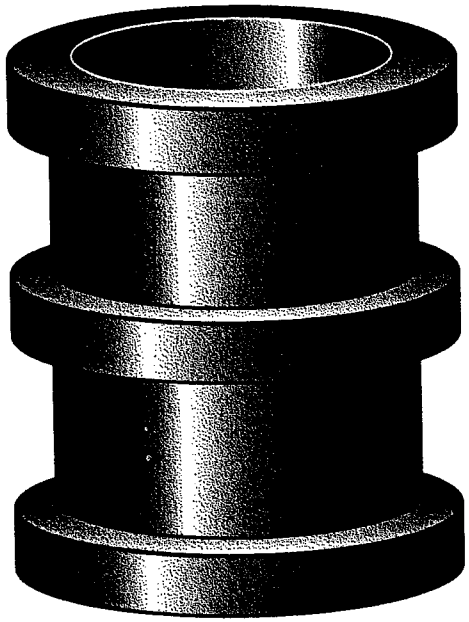

GS 213-19C
E91_LOfl.tif

LO2 Feedline Flange (Machined)

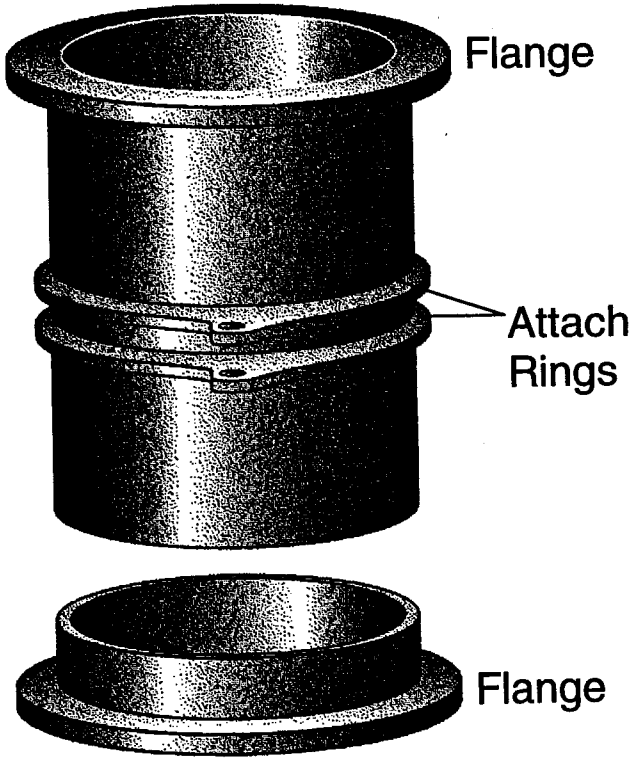

GS 213-19C
E91_LXfl.tif

Senior Management Review

LO2 Feedline Flange Improper Heat Treat - *Background*

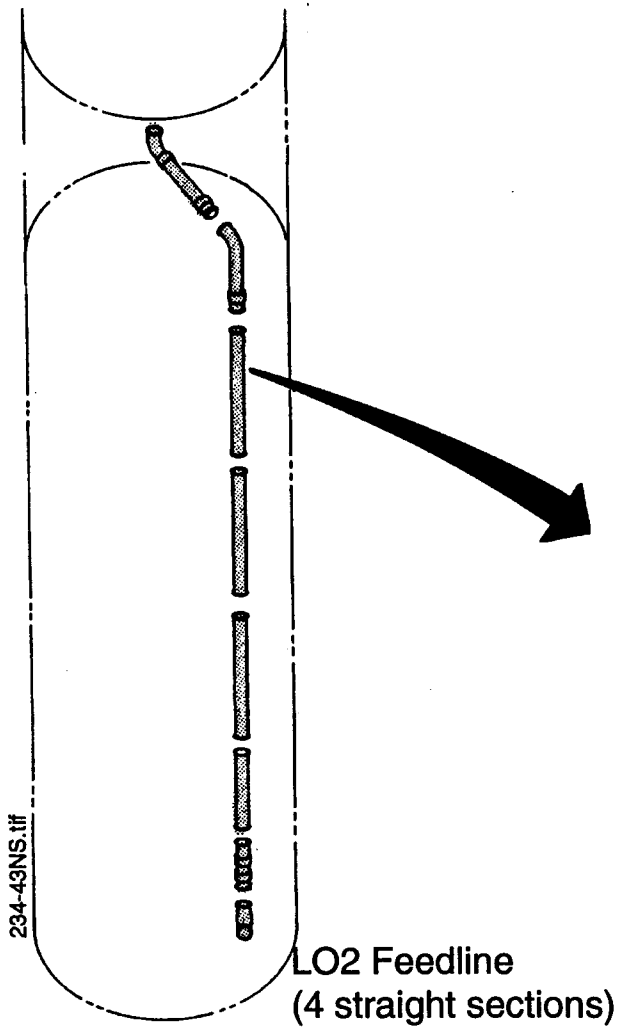

LO2 Feedline
(4 straight sections)

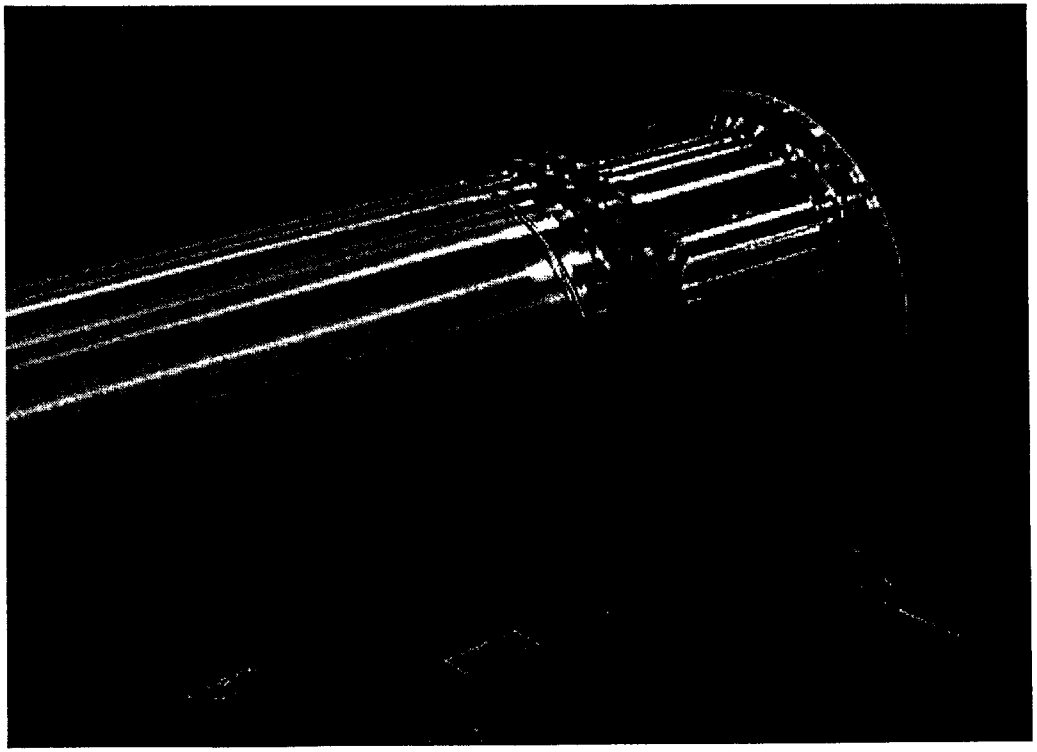

ET-94

Senior Management Review

LO2 Feedline Flange Improper Heat Treat

Discussion:

- Tensile, fracture and corrosion resistance properties can be affected by overheating
- Planned processing and inspection steps are in place to detect the detrimental effects of flange overheating
  - Supplier
    - Cold sizing
    - Heat treat lot tensile tests
    - Visual and ultrasonic inspection
  - MAF
    - Visual and penetrant inspections
    - X-ray
    - Proof test
    - Leak test

Disposition:

- Use as is for components that have successfully passed supplier and MAF inspections

Senior Management Review

LO2 Feedline Flange Improper Heat Treat

Rationale for Acceptance:

- Supplier and MAF inspections are in place to ensure hardware meets requirements
  - Heat treat lot tensile tests
  - Visual and ultrasonic inspection
  - Visual and penetrant inspections
  - X-ray
- All feedline assemblies passed acceptance proof test (Proof factor 1.35) and post proof test leak checks
- Test results from coupons taken from the two cracked flanges exceeded requirements
  - Tensile tests (20 specimens)
  - Simulated service fracture tests (5 specimens)
- No history of corrosion or stress corrosion

NCD Reviews SUMMARY

Results and Conclusions

- Independent audit (LMMSS and NASA) confirm acceptability of standard NCD processing and the integrity of ET-96
- All crack or crack-like defects were repaired on ET-96
- All tests and analysis required to close NCD's has been completed and the NCD subsequently closed

All NCD dispositions were concurrently reviewed by LMMSS and NASA - ET-96 is acceptable for flight

Agenda

• Introduction	Terry Hibbard
• ***SLWT Overview***	
– System Requirements	Louis Palermo
– Material and Process Development	Don Bolstad
– DCR Baseline Design Overview	Jim McAllister
– Verification/Acceptance	Mike Quiggle
– NCD Reviews	Robert Pontiff
– ***DCR Summary***	***Don Bolstad***
• Post-DCR Design Changes	Jim Feeley
• KSC Processing	Steve Lim
• SLWT Tanking Test	Terry McKeough
• SRM&QA Assessment	Steve Copsey
• Special Topic	Jim Feeley
• Certification Status	
• Mission Unique Assessment	
• Readiness Statement	

DCR Summary

- SLWT DCR was conducted in two (2) phases
  - Phase I was held concurrent with the Independent Annual Review (IAR) Review concluded with a Pre-Board presentation on June 2, 1997
  - Phase II was completed on September 30, with a DCR Board presentation
    - Chaired by the ET Project Manager
    - All RIDS were presented and dispositioned

- The following RIDs were dispositioned and closed:
  - TPS erosion (RID D-001)
  - Low strength anomalies (RID M-006)
  - Low tensile strength wide panels (RID M-007)
  - Initial weld allowables (RID Q-001)
  - Penetrant white light inspection (RID Q-007)
  - NDE arbitration (RID Q-008)

RID Summary

RID-D-001 - TPS Erosion Testing

Comment/Problem:

- NCFI has a lower recession rate than CPR-488, the foam it replaced. CPR-488 and PDL had the same recession rate
  - "Step" created by different recession rates causes increased dynamic heating

Discussion:

- Re-entry issue only
- A test program was defined to verify TPS performance through parametric testing in the hot gas facility

Implementation:

- Test program was completed. Test results were assessed and report issued
- Results showed that more representative ascent environments than used in previous tests do not produce the "steps" which caused the concern

RID Summary

RID-M-006 - Low Strength Anomalies

Comment/ Problem:

- LMMSS should provide rationale to disposition low strength anomaly observations that escape NDE detection

Discussion:

- Some weld tensile samples from 2195 welds have had premature failures at low ultimate strengths
  - Examination of the resulting fracture face revealed the presence of a flat/featureless area in the penetration pass region
  - Defects were not found by NDE

Implementation:

- Lockheed Martin recently completed an update on low strength anomaly information
  - Investigation concluded that the low strength anomalies are the result of tab weld failure during weld operations on wide panels and/or weld cert panels
  - Review of the test data and flight weld practices revealed that low strength anomaly formation cannot occur on flight hardware welds.
- Test data and discussion of results reported in LMMSS document no. ETTR-574
  - Initiator reviewed/ concurred with report

RID Summary

RID-M-007 - Low Tensile Strength Wide Panels

Comment/ Problem:

- Repair and initial weld wide panels failed below the applicable design allowable
- Repair weld failures occurred predominately at cryogenic temperature
- Initial weld failures ocurred predominately at room temperature

Discussion:

- Out of 600+ wide panel tests, 38 panels failed at values lower than the design value
- Lockheed Martin and MSFC/NASA jointly established a detailed fault tree to determine the cause(s) of all these lower than expected test results. Each low value wide panel was individually investigated
- Various failure rationales were developed for each low value panel

Implementation:

- The LMC/MSFC weld team completed the fault tree investigation (reference ETTP-575) and concluded that not one of the 38 values impacted flight hardware
- Closure rationale was coordinated with the RID initiator and presented to the S&E management

RID Summary

RID-Q-001 - Initial Weld Allowables

Comment/ Problem:

- Two extrusion weld data sets did not support design values

Discussion:

- Both data sets (A938 and A246) included 2195 extrusion products and both LMMSS and MSFC agreed this caused an unexpected amount of data scatter
- LMMSS agreed to rerun the tests with control of the 2195 extrusion products

Implementation:

- Retests (AD69 and AD60) supported the design values
  - RID initiators reviewed/ concurred with new test data

RID Summary

RID-Q-007 - Penetrant White Light Inspections

Comment/ Problem:

- Current method of using white light inspections in conjunction with penetrant inspection can allow linear indications not to be identified and/or documented

Discussion:

- Concern raised through review of penetrant inspection requirements and inspector instructions, hardware inspections, and discussions with inspectors
  - White light practice could wash out crack-like features and invalidate the POD for penetrant
- LMMSS and MSFC formed a Materials and NDE team to resolve this issue and develop an agreed-to acceptance criteria for penetrant inspection of the SLWT welds

Implementation:

- MAF and MSFC Fracture Control Boards reviewed/concurred with revised acceptance criteria and ET-96 penetrant inspection results
  - Memo of understanding developed and formalized in contract letter

RID Summary

RID-Q-008 - NDE Arbitration

Comment/ Problem:

- Arbitration practice is in violation of arbitration methodology prescribed in Standard Procedure ET 83-4-1
  - Some rejectable indications reported on NCD's have been dispositioned as "no defect" by Product Assurance personnel without full MRB review

Discussion:

- Product Assurance and S&MA rewrote procedures to clarify NDE arbitration issues

Implementation:

- Product Assurance Procedure 17.10.1 (Nonconformance Reporting and Dispositioning) has been revised to reflect the agreements between LMMSS Product Assurance and MSFC S&MA
- Involves MAF fracture control board technical subcommittee concurrence on post-proof NDE and no defect dispositions

DCR Summary

SLWT RIDs and RCAs were closed - No open issues

Agenda

• Introduction	Terry Hibbard
• SLWT Overview	
– System Requirements	Louis Palermo
– Material and Process Development	Don Bolstad
– DCR Baseline Design Overview	Jim McAllister
– Verification/Acceptance	Mike Quiggle
– NCD Reviews	Robert Pontiff
– DCR Summary	Don Bolstad
• ***Post-DCR Design Changes***	***Jim Feeley***
• ***KSC Processing***	
• SLWT Tanking Test	Steve Lim
• SRM&QA Assessment	Terry McKeough
• Special Topic	Steve Copsey
• Certification Status	Jim Feeley
• Mission Unique Assessment	
• Readiness Statement	

Post-DCR Design Changes

- **Deleted GO2 vent hood alignment grid**
  - No longer required due to implementation of GSE laser alignment system
  - Eliminates potential rework
- **Enlarged ET/SRB mating target control area**

Enlarged ET/SRB Mating Target Control Area

Change:

- Enlarged ET/SRB mating control area

Background/ Reason:

- Enhance ET/SRB mating operations
  - Control area used to facilitate centering ET between SRBs
- TPS thickness controlled to 0.125" between +/-Y axes

Description:

- Hardware
  - Increase size of controlled area at Sta. 2041 at the +/- Y axis
    - Was: 3.0 ± 0.25" x 3.0 ± 0.25"
    - Now: 12.5 ± 1.0" x 6.0 ± 1.0"
- Documentation
  - Revised ICD to reflect larger control area

Basis for Certification:

- Similarity
  - Requirements for building and using targets retained
  - Controlled TPS thickness unchanged

Enlarged ET/SRB Mating Target Control Area

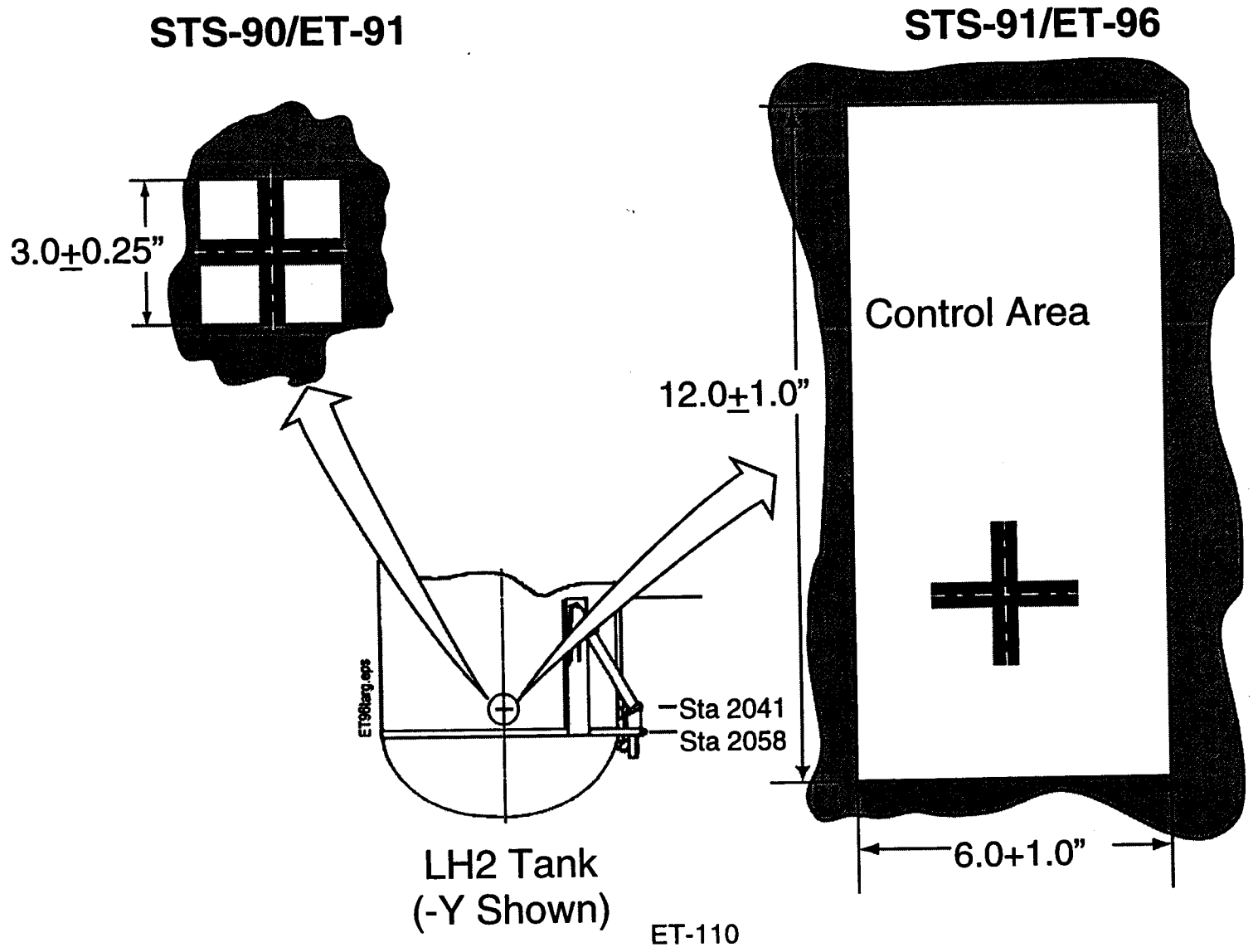

KSC Processing - Status

as of 4/8/98

- Discrepancy Reports (DRs)/Problem Reports (PRs) Review
  - All PR/MRB* discrepancies/dispositions similar to previously flown vehicles

- Limited Life Component/ET Status *
  - All within required life through scheduled launch date plus 90 days

- OMRSD Exception: Instrumentation requirements for GUCP pyro bolt (EK 03740)
  - Unable to satisfy requirements due to failure of strain gage instrumentation to provide stable and accurate data

* Included in Appendix

KSC Processing - Status

as of 4/8/98

- Changes
  - ET modifications *
    - Bldg 45: Additional ET-96 weighing — 1
    - FEC: Instrumented GUCP bolt — 1
  - OMRSD — 4
    - SLWT tanking test (SS12883ML)
    - LO2 load constraint (MS12640) **
    - Block II SSME Pre-press Requirements (SS13373) **
    - SLWT allowable operating life limits (MS13422)
  - Facility Mods — 1 *
  - Software
    - SIM Load — 5/5/98
    - SIM Launch — 4/20/98

* Included in Appendix

** Included in tanking test discussion

KSC Processing - Status

Weighing Summary

Issue: ET-96 weight status (predicted vs. scale)

Background:

- The specification weight for ET-96 is 57,911 lbs
- The control weight for SLWT is 58,005 +/- 511 lbs

	1st weighing (2/10/98)	**2nd weighing (4/1/98)**
• Predicted weight	57,781 lbs	57,781 lbs
• Scale weight	58,319 lbs	58,241 lbs
• Delta	+538 lbs	+460 lbs

Status:

- ET-96 scale weight meets control weight requirement
- ET-96 scale weight exceeded specification weight by 408 lbs
  - Potential contributors to variance identified
    - Weighing system inaccuracies (± 146 lbs)
    - TPS material density/thickness (+ 340 lbs)

Agenda

• Introduction	Terry Hibbard
• SLWT Overview	
– System Requirements	Louis Palermo
– Material and Process Development	Don Bolstad
– DCR Baseline Design Overview	Jim McAllister
– Verification/Acceptance	Mike Quiggle
– NCD Reviews	Robert Pontiff
– DCR Summary	Don Bolstad
• Post-DCR Design Changes	Jim Feeley
• KSC Processing	
• ***SLWT Tanking Test***	***Steve Lim***
• SRM&QA Assessment	Terry McKeough
• Special Topic	Steve Copsey
• Certification Status	Jim Feeley
• Mission Unique Assessment	
• Readiness Statement	

SLWT Tanking Test

Plan

- A test plan was developed to tank/detank the first SLWT with the primary function of providing propellant loading demonstration
  - The resulting temperatures and pressures will be monitored by KSC LMMSS engineering, and MAF MSR
  - Results will be correlated to the analytical MPS predictions and historical data base
  - Six ET/SRB struts will be instrumented with strain gages to allow BNA to perform a correlation of the "pinch load" values
- Low risk test and no issues are expected

SLWT Tanking Test

Tanking Sequence

- Propellants loaded sequentially
  - LH2 loaded to stable replenish
  - LO2 commence loading

- Chilldown, slow fill, fast fill and topping
  - As per normal tanking precedure

- Replenish
  - Both systems to maintain steady state replenish approximately 5.5 hours
  - Demonstrate MPS LH2 recirc. pump reactivation
    - Initiate approximately 30 minutes after reaching stable replenish
    - Simulate pump power supply failure on 1 pump
      - GSE power command off
    - Enable alternate power supply 30 seconds after GSE power command off
  - Red crew inspection
    - Both systems in stable replenish

SLWT Tanking Test

Tanking Sequence (continued)

- Terminal count
  - Normal terminal sequence for LH2 and LO2
  - Initiate LO2 terminal sequence at T-4m55s
  - Initiate LH2 terminal sequence at T-1m57s
    - Perform Block II engine high pre-press test

- Terminal count hold
  - Initiate 9 minute hold at T-31 sec
  - Evaluate LO2 drainback and engine start box temperatures

- Drain
  - Initiate after completion of terminal count hold
  - As per normal detanking sequence

SLWT Tanking Test

Objectives

- Data evaluation
  - The "pass" criteria is met per NSTS 37320 if the data falls within OMRS and predicted limits (usually historical), without unexpected transients

- Verify the following are within limits for pass/fail criteria
  - Thermal and structural response to cryogenic loading induced transients are as expected
  - LO2 anti-geyser requirements are met
  - No unexpected thermal transients are present during LO2 or LH2 chilldown
  - LH2 ullage pressure cycle count is acceptable
  - LH2 and LO2 ullage pressures reach control bands during pre-press and are within LCC limits
  - LO2 drainback temperatures are within limits
  - LH2 temperature stratification during drain
  - Hazardous gas concentrations and thermal conditioning for the Intertank are as predicted

SLWT Tanking Test

Special Tests

Special Test	Objectives
TSM deflection measurement	Verify that LH2 and LO2 TSM deflections are within deflection limits for SLWT
Rapid reactivation of LH2 recirc. pumps	Demonstrate the capability for expedited restart of LH2 recirculation pumps
T-31 sec. and hold	Verify LO2 and LH2 start box requirements are satisfied
Pinch load measurement	• Verify that actual pinch loads are no greater than expected • Demonstrate that it is safe to vent LH2 to ambient @98% (topping)
LH2 high pre-press test	Demonstrate high pre-press for future Block II engine configuration

SLWT Tanking Test

"Pinch" Load Special Test

- Test condition
  - Y-axis loads or "pinch" loads occur at the Sta. 2058 frame due to cryogenic shrinkage of the ET relative to the SRBs
  - Critical location is LH2 aft dome and critical condition is full LO2 tank/full LH2 tank with LH2 tank vented to ambient
    - The critical FS is 1.25 for stability and is consistent with LWT
  - "Pinch" loads must be verified prior to venting the LH2 tank (98% full)
    - Previously verified on STS-1, -2, -3, -5, -6, -7, -26, -27, and -29
    - A contingency loading sequence is available if the "pinch loads" are unacceptable, but not likely as load conditions are well understood

SLWT Tanking Test

"Pinch" Load Special Test (continued)

- Discussion
  - Predictions will be provided for the "pinch" load due to LH2 tank load and additional "pinch load that occurs when the LO2 tank is loaded
  - LH2 tank aft dome margin of safety program is used to verify that required FS are maintained
  - Strut measurements will be evaluated, as a minimum, at the following times:
    - Commencement of LH2 loading
    - 7% LH2 / 0% LO2
      - Assessment will be provided whether nominal loading will continue or if contingency sequence is used
    - 85% LH2 / 0% LO2
      - Assessment will be provided whether LH2 tank can be vented to ambient at 98% LH2 level
    - 98% LH2 (vented to ambient) / 0% LO2
    - 100% LH2 (vented to ambient) / 100% LO2
- Success criteria
  - "Pinch" loads within predictions and no LH2 aft dome anomalies

SLWT Tanking Test

Pinch Loads

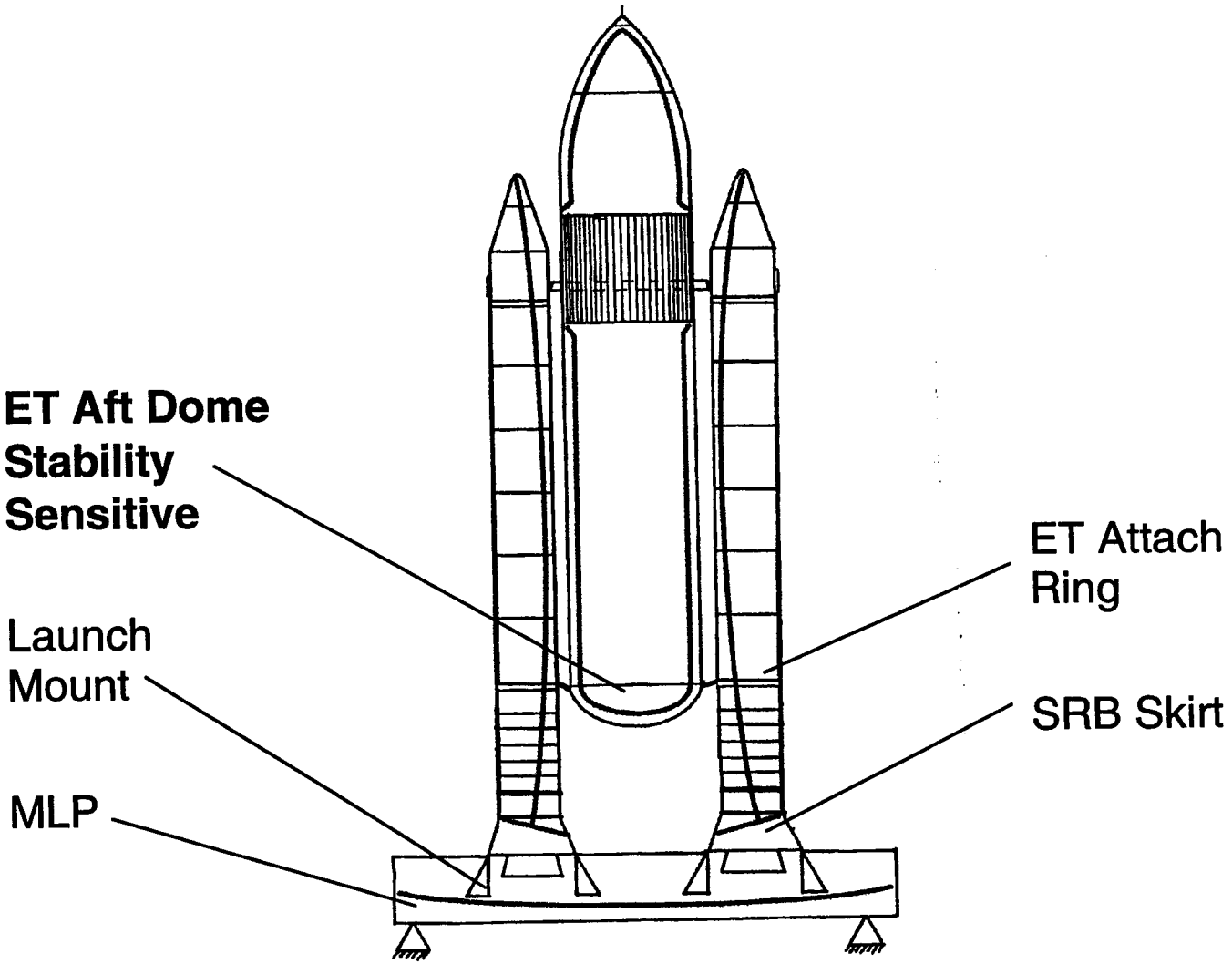

ET-122

SLWT Tanking Test

LH2 High Pre-Press Test

- Discussion
  - LH2 tank pre-pressurization ullage pressure will be increased 5.2 psi for flights with three Block II engines
  - This test demonstrates the ability to perform this higher prepressurization
  - STS-91 flight does not employ this higher pre-pressurization

- Test Description
  - Initiate LH2 high pre-press test at T-1m57s
  - Pre-press LH2 ET until 2 of 3 transducers indicate greater than 45.7 psia
  - Monitor ullage pressure after 1 second
  - If 2 of 3 transducers indicate below 46.7 psia, initiate 0.5 sec. pre-press burst

- Contingency
  - If any transducer indicates greater than 47.7 psia, switch in spare
  - If any transducer indicates above 47.7 psia after switchout, terminate pre-press, vent ET, and detank

SLWT Loading Procedure Revision

Change:

- Constrain LO2 liquid levels for SLWT load/drain

Description:

- Revised constraints for LO2 tank liquid level during:
  - LO2 fast fill
  - Orbiter MPS chilldown/fill to 5%
  - LH2 tank drain

Was	**Now**
LO2 tank liquid level cannot exceed 85% level unless LH2 ullage pressure is >16.2 psia or LH2 tank liquid level is ≥98%	LO2 tank liquid level cannot exceed 40% level unless LH2 ullage pressure is >16.2 psia or LH2 tank liquid level is ≥98%

Reason:

- Revised LH2 aft dome stability
  - "Pinch loads" for LO2 tank levels above 40% would violate FS requirement of 1.25 for a vented ambient LH2 tank aft dome

Basis for Certification:

- Protoflight test: Each LH2 tank aft dome is tested to 115% of design limit load for the critical "pinch loads" condition
- Stress analysis: FS = 1.25

Agenda

• Introduction	Terry Hibbard
• SLWT Overview	
– System Requirements	Louis Palermo
– Material and Process Development	Don Bolstad
– Design Overview	Jim McAllister
– Verification/acceptance	Mike Quiggle
– NCD reviews	Robert Pontiff
– DCR Summary	Don Bolstad
• Post-DCR design changes	Jim Feeley
• KSC Processing	Jim Feeley/Brian Piekarski
• ***SRM&QA Assessment***	***Terry McKeough***
• Special Topic	Steve Copsey
• Certification Status	Jim Feeley
• Mission Unique Assessment	
• Readiness Statement	

SRM&QA Assessment

as of 4/8/98

Item	Status
• **Alerts**	None open
• **MRB Assessment**	Complete - No issues/no impact to hazard controls
• **Hazard Assessment**	Complete - All hazard reports were re-assessed and hazard controls verified
• **Corrective Action Problem Summaries (CAPS)**	
- Penetrant indications on machined LO2 feedline flanges (P-084)	• Previously discussed as Senior Management NCD
- Loss of Intertank SOFI during ascent of STS-87/ET-89 (T-067PF)	• To be discussed as Special Topic

Agenda

• Introduction	Terry Hibbard
• SLWT Overview	
– System Requirements	Louis Palermo
– Material and Process Development	Don Bolstad
– Design Overview	Jim McAllister
– Verification/acceptance	Mike Quiggle
– NCD reviews	Robert Pontiff
– DCR Summary	Don Bolstad
• Post-DCR design changes	Jim Feeley
• KSC Processing	Jim Feeley/Brian Piekarski
• SRM&QA Assessment	Terry McKeough
• ***Special Topic***	***Steve Copsey***
• Certification Status	Jim Feeley
• Mission Unique Assessment	
• Readiness Statement	

Special Topic - IFA STS-87-T-01

Issue

- TPS material loss from thrust panels since change to NCFI 24-124 on STS-86/ET-88

Discussion

- NCFI 24-124 successfully flown since STS-87/ET-85 on LH2 tank and since STS-88/ET-86 on LO2 tank

- Root cause(s) not identified to date

- Major contributors believed to be driving failure
  - Ribbed configuration
  - Flexure

- Normal ascent environments then contribute to drive failure
  - Aeroloading
  - Vacuum
  - Heating

Special Topic - IFA STS-87-T-01

Discussion (continued)

- Interim corrective action implemented on STS-89/ET-90 Intertank thrust panel
  - Resulted in less extensive Orbiter lower surface damage

- Additional machining was performed on STS-90/ET-91 to further reduce foam in valleys
  - Factor of safety for cracking in flexure increased from 1.10 to 1.51

- STS-91/ET-96 Intertank thrust panel configuration revised for SLWT
  - Incorporated 7 circumferential ribs on Intertank thrust panel
  - Minimum foam thickness varies from 0.25" to 0.50"
  - Foam auto machined to specified minimum requirement + 0.070"
    - Factor of safety for cracking in flexure > 2.0

- Work still in progress to determine root cause scenario, develop discriminator test and define final corrective action
  - Team has performed testing that could be performed in short order
  - Higher fidelity tests with more accurate representation and combination of environments are needed

Special Topic - IFA STS-87-T-01

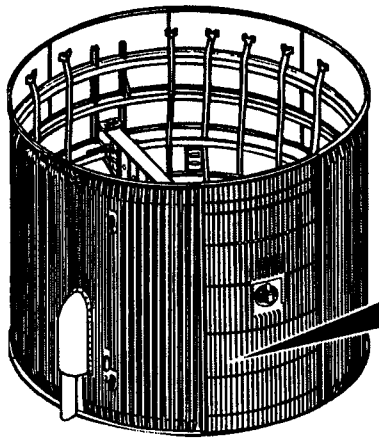

Intertank
(SLWT Shown)

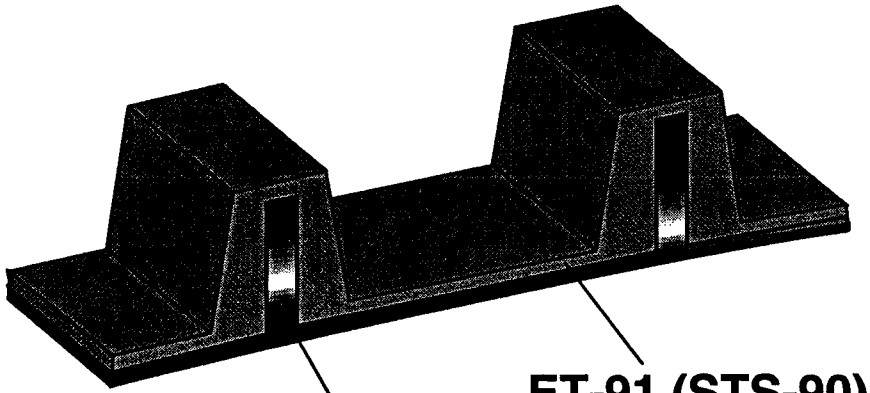

Ribs

ET-91 (STS-90) and ET-96 (STS-91) Final Thrust Panel Foam Configuration

	Typical Thickness			
	Thrust Panel		Stringer Panel *	
	Tops	Valleys	Tops	Valleys
STS-89/ET-90	0.70"	1.3"	1.3"	1.5"
STS-90/ET-91	0.50"	0.50"	0.55"	0.55"
STS-91/ET-96	0.40"	0.40"	0.55"	0.55

* Completely machined for STS-90/ET-91 and STS-91/ET-96

Special Topic - IFA STS-87-T-01

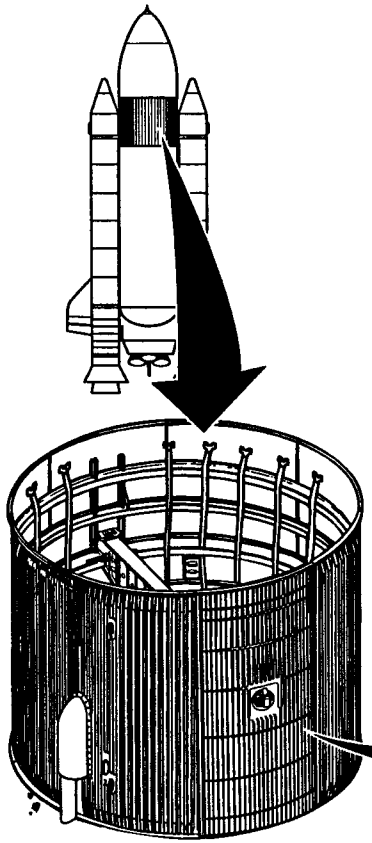

Intertank
(SLWT shown)

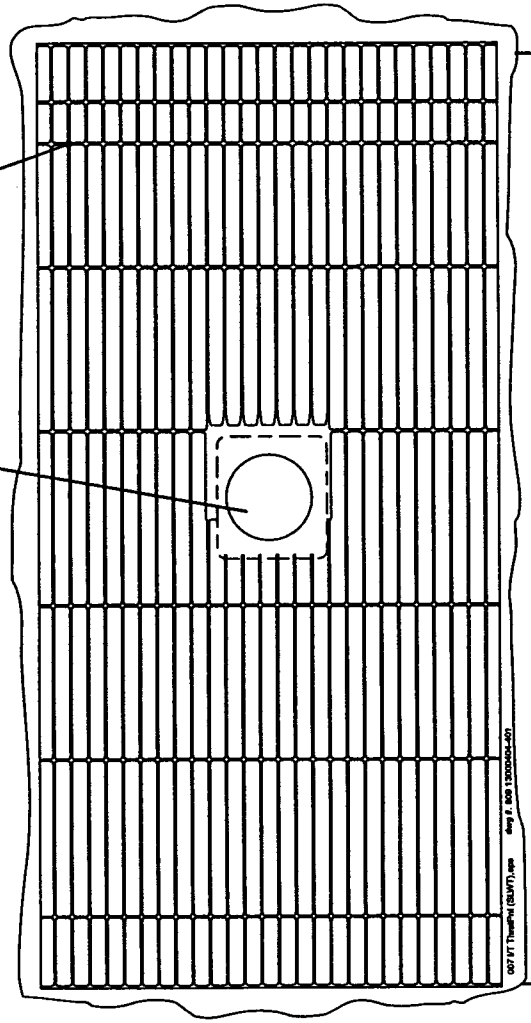

Circumferential Ribs
(7 places)

ET/SRB
Fitting

Sta 852
LO2 Tank/Intertank
Flange

Sta 1123
Intertank/LH2 Tank
Flange

STS-91/ET-96 Thrust Panel
ET-131 (+Y Shown)

Special Topic - IFA STS-87-T-01

Summary

- Factor of safety against what is considered prime driver in foam loss (flexure) has been increased
  - SLWT configuration has seven additional circumferential ribs to reduce panel flexure
  - TPS has been machined to lower thicknesses and closer tolerances than hand sanding accomplished on STS-89 and STS-90
    - Reduced outer fiber bending stresses

- SLWT foam configuration meets all thermal design requirements

- Possible interactions of the sanded configuration to the thrust panel has been scrutinized and found acceptable

- Thrust panel TPS issue reviewed/accepted in STS-91/ET-96 ET/SRB mate review and STS-90/ET-91 SSV FRR

Agenda

• Introduction	Terry Hibbard
• SLWT Overview	
– System Requirements	Louis Palermo
– Material and Process Development	Don Bolstad
– Design Overview	Jim McAllister
– Verification/acceptance	Mike Quiggle
– NCD reviews	Robert Pontiff
– DCR Summary	Don Bolstad
• Post-DCR design changes	Jim Feeley
• KSC Processing	Jim Feeley/Brian Piekarski
• SRM&QA Assessment	Terry McKeough
• Special Topic	Steve Copsey
• ***Certification Status***	***Jim Feeley***
• ***Mission Unique Assessment***	
• ***Readiness Statement***	

Certification Status

as of 4/8/98

Item	Status
• NSTS 07700, Volume X Baseline – Revision L, Change 242	No issues
• Certification documentation – Hardware Certification Sheets (HCS) – Certificates of Qualification (COQ)	Complete - No issues
• Waivers/Deviations *	Complete - No issues

* Included in Appendix

Mission Unique Assessment

as of 4/8/98

Category/Item	STS-91
• Review of MRB actions using updated loads	ECD 5/12/98
• MPS Preflight Prediction Package	ECD 5/2/98

Readiness Statement

The External Tank, ET-96 is hereby certified and ready for STS-91 flight pending completion/closure of open and planned work

Terry L. Hibbard
Vice President, External Tank Project
Lockheed Martin Michoud Space Systems

Appendices

- **A: Minor Changes**

- **B: SRM&QA Assessment**
  - NCD Assessment Criteria

- **C: KSC Processing**
  - Limited Life Components
  - Modification Summaries/Status
  - Software Changes

- **D: Previously presented items**
  - Level III Deviations

Class II or JS/DCN Changes

- All Class I/II JS/DCN changes have been reviewed by MSFC Resident Office
- All Class II STP/STM/Standards changes have been reviewed by MSFC M&P Lab
- These changes are acceptable for flight and summarized in this appendix (presentation not required)
  - Presentation criteria - Selection for presentation based on changes affecting:
    - Processes
    - Configuration
    - Material
    - Alternate Hardware
  - Presentation rejection criteria - All changes that do not affect configuration, material or processes
    - Revise Point of Incorporation
    - Drawing Clarification
    - Non-Flight Hardware Installation/Removal
    - Datum Changes
    - Update Usage/List of Materials (L/M)
    - Drawing Incorporation Errors
    - Manufacturing Aid
    - Drawing Errors
    - Fastener Type/Grip
    - Tolerance Change
    - Productivity
    - Minor changes taken care of by initial release of Class I Change (Same categories as above)

Class I/II or JS/DCN Changes - List, Propulsion

Change No.	Description
H35809-824	After Intertank tubing fit check, the new tube mock-up bend data affected harness routing & clamp supports location/hardware. This change will correct views and revise screw lengths to reflect the as built tube/harness installation
H35809-860	SLWT Walking Loads Criteria Document 80900000061 replaces LWT Criteria Document 80900000031. This change will roll dash no. by limiting -009 and creating -500 to reflect the change of criteria document
J31185	Release Parker Metal Bellows (PMB) Documents into the LMMSS Document Control Systems to establish Design & Custodial Responsibility

Class I/II or JS/DCN Changes - List, Structure

Change No.	Description
J31176-001/ 002/008/ 015/016	Update misc ICD callouts on various drawings • Parts were built to ICD requirements, MRB records checked to ensure non-compliances also met requirements • No issues found
J31180-003	Double sided tape used during isolator installation in vertical orientation would not peel. Tape was applied a long time before use, application changed to immediately prior to use. Shelf life limit also added to tape
J31192-001	Eliminated LH2 barrel panel penetrant inspection after panel machining when panels are still in T3M4 condition because panels are susceptable to corrosion from the etchant in this condition • Penetrant still performed after forming and ageing panels to T8M4 (see J31192-002) • Some relaxation of panel edge flatness tolerances also included on this change as a result of multiple NCD's

Class I/II or JS/DCN Changes - List, Structure

Change No.	Description
J31192-002	Added note to LH2 barrel panel forming drawings to ensure correct etch is performed prior to penetrant inspection. Etch used to occur as part of the prior penetrant inspection now deleted by J31192-001
H35809-829	ET/SRB fairing grommet installation revised to allow gap under grommet flange. Grommet meets venting requirements without fully seated flange
H35809-849	Additional clearance added between GH2 line and restrictor plate
H35809-843	LH2 clean and prime for SLWT - fix errors which occurred during conversion from LWT to SLWT drawings, no change in requirements for SLWT

Class I/II or JS/DCN Changes - List, TPS

Change No.	Description
H35809-865	Provide vacuum bag seal about LH2 Aft Dome siphon membrane tooling hole to enhance SLA panel bonding operations
H35809-866	Revised foam configuration at LH2 Barrel and Sta. 2058 ring frame on the "Y" Axis to match the SLWT substrate configuration
H35809-917	Revise foam trim requirements at LH2 Barrel and Upper SRB Fittings remove interference between LH2 acreage foam and TPS on Upper SRB Fairings
H35809-925	Eliminated angular chamfer trim on SLA Panels applied to LH2 Apex Siphon Membrane to reduce cracking of panels during bonding operations
H35809-933	Remove foam rind from areas on Intertank Thrust Panels that were not machined by automated process to reduce debris concern

Class I/II or JS/DCN Changes - List, TPS

Change No.	Description
J31186-005	Incorporate producibility enhancement changes on the TPS applied to the Composite Nose Cone (revise flow restrictor trims, add chamfer, and add teflon tape)
J31186-006	Incorporate producibility enhancement changes on the adjacent TPS for installing the Composite Nose Cone (remove RTV application, delete aclar film details, revised application of great stuff until after nose cone installation)
J31193-001	Pick up part number roll from Intertank Stringer End Cap changes

NCD Assessment Criteria

- Assessment of all MRB Items
  - Adequacy of technical dispositions
  - Completeness of required repair/retest
  - First time occurrences/SMR
  - Verification of margin of safety assessment/documented
  - Review of impact to hazards
  - Engineering review for impact to loads
  - Engineering review for reduced extrusion to plate weld allowables

ET-96 DR/PR/OMRSD Waiver/Exceptions

as of 4/8/98

System	Discrepancy	Problem	MRB Items	Exceptions/ Waivers
	Total	Total	Open	Total
Electrical	0	0	0	0
Propulsion/ Pneumatics	0	4	0	0
Structures	2	2	0	1
Thermal (TPS)	0	5	0	0
Total	**2**	**11**	**0**	**1**

ET-96 PR/MRBs - Summary, Propulsion

PR No./Status	Title/Description	Disposition
PET-96-FP- 0003 Closed	GFP LH2 disconnect roller arm housing brazing was filed through to the Foam during .003" clearance verification between roller arm and roller arm housing	• Use as is • No effect of disconnect operation

ET-96PR/MRBs - Summary, Thermal

PR No./Status	Title/Description	Disposition
PET-96-TS-0001 Closed	MBO resin is peeling/flaking on the top (-X) side of the LO2 umbilical	• Use as is
PET-96-TS- 0004 Item #1 Closed	Area of crushed foam on the -Y ET/SRB aft fairing assembly lower half (0.5" dia. X0.37" dia.)	• Use as is • Loose foam removed • Remaining foam thickness 1.53" provides adequate thermal protection
PET-96-TS-0005 Open	Lower -Z corner of LH2 cable tray PDL foam is broken. (damage is 1.5" X 1.0"X.8)	• Use as repaired (PDL) • Additional bondlines will have no affect on closeout performance

ET-96 Limited Life Components

Cycle Sensitive

Description	Part No.	Serial No.	Limit	Required
LO2 Fwd Ogive Cover Plate	80911001207-509	000473040	8	2
LO2 Tank Mechanical Assy	80912002000-500	000497770	8	2
LO2 Manhole Cover Assy	80911001205-509	000510340	8	2
LH2 Manhole Cover Assy	80914081488-509	000482740	8	4
LH2 Tank Mechanical Assy	80914002000-500	000513980	8	4
LH2 Manhole Cover Assy (Aft Dome)	80911001444-509	000477440	8	4

ET-96 Limited Life Components

Age Sensitive

Description	Part No.	Serial No.	Limit	Initiation	Expiration
External Tank	80901000000-500	00000089	6 Yrs	1/1998	1/2004

Age Sensitive Pyrotechnics - 10 Years Life/Requires Lot Verification Tests After 4 and 7 Years

Description	Part No.	Lot No.	Serial No.	Date of Manufacture	Expiration
Separator Assy GUCP	PD5000020-059	AAG	00001132	12/1996	12/2000
Cartridge Assy	PD5000020-030	AAG	00001232	12/1996	12/2000
			00001233	12/1996	12/2000

Software Changes

Description	Reason
• LH2 Software - Manual work around for ET LH2 tank high pressure pre-pressurization test – Occurs during the terminal count sequence	Demonstrate the capability to control the higher LH2 pre-pressurization band for the Block II SSMEs (PRCB S0822174)
• GLS Software - Manual steps to mask out LCCs not required for tanking test	Allow GLS to be configured for a tanking test terminal countdown
• Automated Software - Checks configuration of LH2 tank prior to proceeding beyond 40% full in the LO2 tank	• OMRS changed from 85% to 40% fill level • Check was automated into software

Level III Deviations

Document/ Requirement	Paragraph	Waiver No.	Effectivity
CPTO1M09A, External Tank Contract End Item Specification			
Potential particulate on downstream side of LH2 tank siphon screens could violate cleanliness requirement	Para 3.3.10 (d)	231 R3	ETs 87-91 ETs 96, 97 & 99

Level III Deviations

Document/ Requirement	Paragraph	Waiver No.	Effectivity
MMC-ET-TMO4k-B, ET Flight Acceptance Requirements			
• Test exceeded the 60 minute pressure requirement in order to analyze the instrumentation data • Additionally, the cumulative 150 minute requirement above 60% proof pressure was exceeded due to use of 0.25% per second of pressure ramp rate	Para 2.3.1.2	228 R1	ET-96
• LH2 structural integrity test exceeded the requirement that specified that no more than 5 minutes shall be used to raise pressure from 85% to 100% of required proof pressure or to lower it from 100% to 80% – Testing exceeded the 5 minutes in order to analyze the instrumentation data	Para 2.3.1.2	230	ET-96

FLIGHT READINESS STATEMENT
STS-91/ET-96
EXTERNAL TANK PROJECT
Δ PRE-FLIGHT REVIEW

EXTERNAL TANK ET-96/STS-91, AS IDENTIFIED IN THE EXTERNAL TANK PROJECT DELTA PRE-FLIGHT REVIEW DATED MAY 14, 1998, IS CONSIDERED READY TO SUPPORT FLIGHT UPON ACCEPTABLE DISPOSITION OF OPEN/PLANNED WORK AND/OR OPEN ACTIONS.

for E. C. SMITH/EB01

J. L. LUSK/EE31

A. F. WHITAKER/EH01

A. O. HARRIS/CR01

J. W. KILPATRICK/EL01

B. E. GOLDBERG/ED01

H. V. McCONNAUGHEY/EP01

M. D. SMILES/CR70

P. V. COUNTS/SA31, CHAIRMAN

May 14, 1998

Space Shuttle
External Tank

STS-91/ET-96
Delta Pre-Flight Review

Agenda

• ***Overview***	***Jim Feeley***
• Prior Mission Performance Summary	
• Senior Management Review NCDs: No new items	
• Changes since Pre-Flight Review (4/9-10/98)	Mike Quiggle
– FEC KET-0037	
• Sanded Foam on LO2 Tank Ogive	
– Exception to NSTS 08123	Louis Palermo
• Flow Induced Vibration of LH2 Feedline Bellows	
• SRM&QA Assessment	Mike Bankester
• KSC Processing	Fred Lockhart
• Special Topics	
– Hess PDL	Chuck Williams
– IFA STS-87-T-01 Status	Steve Copsey
– ET-96 Weld Repairs	Don Bolstad
• Mission Unique Assessment	Jim Feeley
• Readiness Summary	
• Readiness Statement	
• Appendices	
– A: SRM&QA Assessment	
– B: KSC Processing	

Overview

- Review covers changes, differences and "out of family" non-conformances not previously flown and/or reviewed

- This delta review for STS-91/ET-96 includes:
  - Items not previously addressed at the Pre-Flight Review (4/9-10/98)

- FRR Series

– ET/SRB Mate	3/25/98
– Pre-flight Review	4/9-10/98
– Space Shuttle Vehicle TRR	5/12/98
– ***Delta Pre-Flight Review***	***5/14/98***
– Space Shuttle Vehicle FRR	5/19/98
– Mission Management Team (L-1 Day)	6/1/98

- Tanking Test — 5/18/98

- Launch — 6/2/98

Prior Mission Performance Summary

STS-90/ET-91, 4/17/98

System	Performance
OMRSD/LCC	No violations
Instrumentation	• 98% LH2 liquid level sensor read wet then went dry until approximately T+ 70 seconds and then read wet – IPR-93V-003 processed to trouble shoot Orbiter side to check signal conditioner, point sensor electronic box, and cabling – No anomalies found - USA will close as unexplained anomaly • 100% LO2 liquid level sensor #2 behaved erratically at T+5 minutes for a duration of 15 seconds – IPR-93V-005 processed to trouble shoot Orbiter side to check signal conditioner, point sensor electronic box, and cabling – No anomalies found - USA will close as unexplained anomaly

Prior Mission Performance Summary

STS-90/ET-91, 4/17/98

System	Performance
MPS	No violations
ET Hazardous Gas	Nominal
TPS	No issues
ET disposal	Nominal
Orbiter tile damage	Lower surface, less than average • Hits > 1" = 11 • Total Hits = 76
Post flight photo review	Discussed in Special Topic IFA section

Agenda

• Overview	Jim Feeley
• Prior Mission Performance Summary	
• Senior Management Review NCDs: None	
• ***Changes since Pre-Flight Review (4/9-10/98)***	***Mike Quiggle***
– ***FEC KET-0037***	
• ***Sanded Foam on LO2 Tank Ogive***	
– ***Waiver to NSTS 08123***	***Louis Palermo***
• ***Flow Induced Vibration of LH2 Feedline Bellows***	
• SRM&QA Assessment	Mike Bankester
• KSC Processing	Fred Lockhart
• Special Topics	
– Hess PDL	Chuck Williams
– IFA STS-87-T-01 Status	Steve Copsey
– ET-96 Weld Repairs	Don Bolstad
• Mission Unique Assessment	Jim Feeley
• Readiness Summary	
• Readiness Statement	
• Appendices	
– A: SRM&QA Assessment	
– B: KSC Processing	

Sanded Foam on LO2 Tank Ogive

Issue

- Postulated contour deviations on STS-91/ET-96 LO2 tank forward to aft ogive weld could result in TPS cracking when tank is pressurized

Background/Discussion

- Contour deviations on ET-100 initiated re-review of contour deviation inspection criteria
- Prior inspection criteria had been to visually inspect for flat spots or negative contours
- Request for clarification of visual criteria resulted in definition of a specific criteria that was more restrictive than could be assured to have been visually detected
- Subsequent analyses developed relationship between contour deviation and weld peaking using measurements from ETs 99 thru 102
- Peaking measurements taken on ET-96 indicate potential for contour deviations at Station 536 which could cause as-sprayed TPS to crack when tank is pressurized

Sanded Foam on LO2 Tank Ogive

Rationale for STS-91/ET-96 Acceptance

- Local sanding of TPS over suspect areas (100" L x 11" W) reduces TPS outer fiber strain and increases strain capability of foam
  - ET-96 foam thickness in this area = 2.30"
  - Remaining foam thickness after sanding is 1.15" to 1.31"
    - Thicknesses were verified prior to and after sanding with a 3" Kaman electronic measurement device (extensively used at MAF and KSC)
- All other ET weld locations assessed
  - Not an issue due to previous contour inspection with contour gages, TPS thickness, or tank structure thickness
- No structural issue with suspect contour deviations

Sanded Foam on LO2 Tank Ogive

Rationale for STS-91/ET-96 Acceptance (continued)

- Stress analysis: Factor of Safety = 1.23 (failure mode: flexural strain)
  - Required = 1.1

- Thermal analysis shows adequate thermal protection remaining
  - Using the maximum heating amplification factor of 2.0 and the minimum sanded area thickness of 1.15" adequate foam remains at the end of flight to meet all thermal requirements
  - Ascent temperatures are less than allowable temperatures
  - Rupture is below the maximum allowable rupture altitude

Sanded Foam on LO2 Tank Ogive

Rationale for STS-91/ET-96 Acceptance (continued):

- Debris assessment - Other ET configurations are representative of the 12° ramp configuration
  - Forward ogive "pencil sharpened" area is sanded NCFI at angle to free stream which has successfully flown with NCFI since ET-86
  - ET-91 thrust panel had ≈30° to 45° NCFI ramps where foam thickness was increased because of fastener clearance
  - NCFI at aft edge of Intertank door is 90° to local flow
  - Wind tunnel and hot gas panels are all exposed at angles to flow
  - Ramps of less erosion-resistant materials (PDL and BX-250/SS-1171) are successfully used extensively over the vehicle with larger ramp angles
  - NCFI test panels with fabricated divots with vertical back walls have been tested and have shown no tendency to produce debris larger than normal ablation products
  - 12° ramp area begins 11 inches aft of the no ice zone
    - 1/16" ice allowed (equivalent to approximately 0.5" foam)
  - BNA analysis shows:
    - SOFI debris from this area would impact Orbiter nose or below nose and not the Orbiter windows
    - 1.0" dia. x 0.125" debris would not damage Orbiter tile

Sanded Foam on LO2 Tank Ogive

Conclusion

- Reduced TPS thickness meets all aero/thermal requirements (ground, ascent, and re-entry)
- Potential for debris on sanded ogive is no greater than on other areas on tank
- Hot gas tests in work to confirm conclusion

LH2 Feedline Bellows Flow Induced Vibration

Waiver to NSTS 08123

Description:

- Revise existing waiver for flow induced vibration (FIV) for ET LH2 feedline bellows

Background/ Reason:

- Waiver is against certification methodology in Level II document NSTS 08123 as implemented by Volume X of the NSTS 07700 document for unlined bellows
  - Requires analysis per MSFC drawing 20M02540 to determine if coupling exists
  - If coupling exists certification by test is required or redesign of hardware to delete coupling
- ET LH2 feedline bellows do not meet requirement for RPL (Rated Power Level) > 102%
  - MPTA had been tested up to 102% RPL
- Waiver to this requirement since STS-1 covers flow rates up to and including 104% RPL
  - ET-90 (STS-89) was waived to 104.5% RPL (PRCBD S005203K, dated 1/21/98)
    - ET-96 (STS-91) is expected to fly with same RPL 104.5%
  - Exception to NSTS 08123 for 106% is planned for ET-97 and up

LH2 Feedline Bellows Flow Induced Vibration

Waiver to NSTS 08123

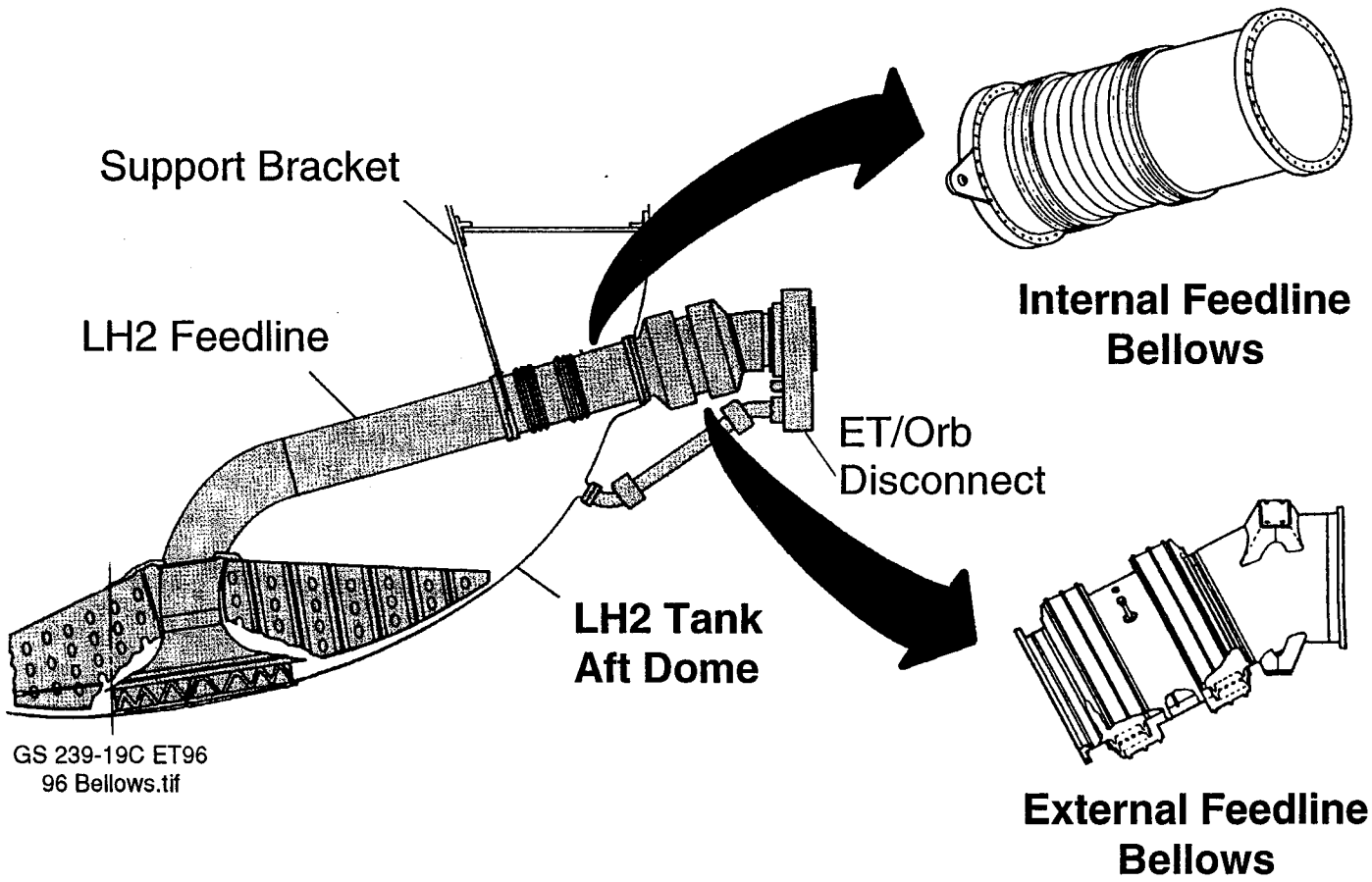

LH2 Feedline Bellows Flow Induced Vibration

Waiver to NSTS 08123

Background/ Reason (continued):

- Bellows are considered to be acceptable for increased power levels by existing waiver rationale
  - Hardware has not changed
  - Analysis methodology has not changed, i.e. computer code which predicts coupling and FIV stresses
  - Previous analysis considered flow rates up to and including 109% (3 engines) RPL
  - FIV stresses for 109% RPL equal or exceed those for lower flow rates
  - Previous analysis showed high margins on fatigue life with a factor of 4 on required cycles using predicted stress level at 109% (3 engines) RPL

LH2 Feedline Bellows Flow Induced Vibration

Waiver to NSTS 08123

Rationale for STS-91/ET-96 Acceptance:

- Previous waiver for 104% RPL
  - FIV analysis for existing waiver considered 104% and 109% maximum flow rates
  - 109% flow for three engines, line velocity = 70.4 ft. sec
- Hardware certified for flow velocities up to 70.4 ft/sec (109% RPL) but only submitted for existing requirement of 104% RPL
- Internal and external bellows hardware acceptable for 104.5% and 106% RPL based on existing waiver rationale
  - Previous analysis velocity of 70.4 ft/sec exceeds the velocity for 106% RPL; 104% = 66 ft/sec; 106% = 68 ft/sec; 109% = 70.4 ft/sec
  - In this range of velocity, stresses increase with velocity
  - FIV stresses previously presented as part of the supporting rationale for the current waiver remain a conservative estimate of the bellows maximum FIV stress level for power levels of 104.5%, 106%, or 109%

Agenda

• Overview	Jim Feeley
• Prior Mission Performance Summary	
• Senior Management Review NCDs: None	
• Changes since Pre-Flight Review (4/9-10/98)	Mike Quiggle
– FEC KET-0037	
• Sanded Foam on LO2 Tank Ogive	
– Exception to NSTS 08123	Louis Palermo
• Flow Induced Vibration of LH2 Feedline Bellows	
• ***SRM&QA Assessment***	***Mike Bankester***
• KSC Processing	Fred Lockhart
• Special Topics	
– Hess PDL	Chuck Williams
– IFA STS-87-T-01 Status	Steve Copsey
– ET-96 Weld Repairs	Don Bolstad
• Mission Unique Assessment	Jim Feeley
• Readiness Summary	
• Readiness Statement	
• Appendices	
– A: SRM&QA Assessment	
– B: KSC Processing	

SRM&QA Assessment

as of 5/12/98

Item	Status
• **Alerts**	None open
• **MRB Assessment**	Complete - No issues/no impact to hazard controls
• **Hazard Assessment**	Complete - All hazard reports were re-assessed and hazard controls verified
• **Corrective Action Problem Summaries (CAPS)**	
– Loss of Intertank SOFI during ascent of STS-87/ET-89 (T-067PF)	To be discussed as Special Topic
– ET/SRB Harness failed the 1500 VDC post installation Dielectric Withstanding Voltage (DWV) test (E-164)	Pending MSFC closure

Agenda

• Overview	Jim Feeley
• Prior Mission Performance Summary	
• Senior Management Review NCDs: None	
• Changes since Pre-Flight Review (4/9-10/98)	Mike Quiggle
– FEC KET-0037	
• Sanded Foam on LO2 Tank Ogive	
– Exception to NSTS 08123	Louis Palermo
• Flow Induced Vibration of LH2 Feedline Bellows	
• SRM&QA Assessment	Mike Bankester
• ***KSC Processing***	***Fred Lockhart***
• Special Topics	
– Hess PDL	Chuck Williams
– IFA STS-87-T-01 Status	Steve Copsey
– ET-96 Weld Repairs	Don Bolstad
• Mission Unique Assessment	Jim Feeley
• Readiness Summary	
• Readiness Statement	
• Appendices	
– A: SRM&QA Assessment	
– B: KSC Processing	

KSC Processing - Status

as of 5/12/98

- **Discrepancy Reports (DRs)/Problem Reports (PRs) Review**
  - All PR/MRB * discrepancies/dispositions similar to previously flown vehicles
  - All MRBs have been reviewed by MAF Reliability for potential SMR
- **Limited Life Component/ET Status**
  - All within required life through scheduled launch date plus 90 days
- **OMRSD Exceptions/Waivers**: No new items
- **Field Engineering Change**
  - KET-0037, Sanded foam on LO2 Tank ogive (Previously discussed)

* Included in Appendix B

Agenda

• Overview	Jim Feeley
• Prior Mission Performance Summary	
• Senior Management Review NCDs: None	
• Changes since Pre-Flight Review (4/9-10/98)	Mike Quiggle
– FEC KET-0037	
• Sanded Foam on LO2 Tank Ogive	
– Exception to NSTS 08123	Louis Palermo
• Flow Induced Vibration of LH2 Feedline Bellows	
• SRM&QA Assessment	Mike Bankester
• KSC Processing	Fred Lockhart
• ***Special Topics***	
– ***Hess PDL***	***Chuck Williams***
– ***IFA STS-87-T-01 Status***	***Steve Copsey***
– ***ET-96 Weld Repairs***	***Don Bolstad***
• Mission Unique Assessment	Jim Feeley
• Readiness Summary	
• Readiness Statement	
• Appendices	
– A: SRM&QA Assessment	
– B: KSC Processing	

Special Topic - Hess PDL

Issue

- PDL manufactured by Hess has suspect quality in some repair configurations

Background/Discussion

- Hess obtained license to manufacture PDL after UTI went out of business
- Vendor recertification plan established
- 2 lots passed all plan requirements and released to production and KSC
- Shelf life extension tests for Lot #1 and #2 at MAF surfaced suspect condition for SRI repairs
- Lot #3 received at MAF and passed RAP requirement
  - Material released to production and KSC
    - Vendor recertification testing per plan in work
  - Suspect condition exists with SRI repairs
- Review of Lot #1 usage:
  - No usage on ET-96 at MAF
  - Two applications at KSC
    - 2 inch square repair was made to the LH2 umbilical cable tray at Station 2090
    - ET/SRB aft fairing closeout at Station 2058

Special Topic - Hess PDL

Rationale for STS-91/ET-96 Acceptance

- Mock-up of similar application to LH2 umbilical cable tray complete - No issues
  - Area is aft of Sta. 2058 (≈ 2 sq in.)
    - Ice/frost prevention only
    - Not a debris concern
- Mock-up of the ET/SRB aft fairing closeout was performed at MAF
  - Two trial applications were performed
    - Both met defined validation requirements
      - Foam exhibited required tensile strength
      - No voids or delamination were observed
- Lot #3 usage for jackpad closeouts and repairs at KSC
  - Successful RAP testing and qualification program in work
  - Mock-up pours complete - No issues
  - 3 additional areas (≈ 2 sq. in. each) on LH2 umbilical cable tray pending repair
    - Mock-ups of similar sizes, orientations complete - No issues

Special Topic - IFA STS-87-T-01

Purpose

- Update Board on status of Intertank thrust panel TPS loss investigation
  - TPS material loss from thrust panels since change to NCFI 24-124 on STS-86/ET-88

Discussion

- Interim corrective action implemented to reduce flexure on STS-89/ET-90 Intertank thrust panel
  - Resulted in less extensive Orbiter lower surface damage than STS-87/ET-89
- Additional machining was performed on STS-90/ET-91 to further reduce foam in valleys
  - Factor of safety for cracking in flexure increased from 1.10 to 1.51
  - Orbiter lower surface damage below CPR fleet average
  - Pattern of hits suggest some foam loss from thrust panel may still be occurring
  - Crew photos of ET cannot confirm material loss from thrust panels
    - Estimated that microscopic examination of crew photographs can detect divots larger than 3 inches
  - 16 mm umbilical film review also inconclusive
  - 35 mm umbilical film not available to date

Special Topic - IFA STS-87-T-01

Orbiter Debris Damage Locations

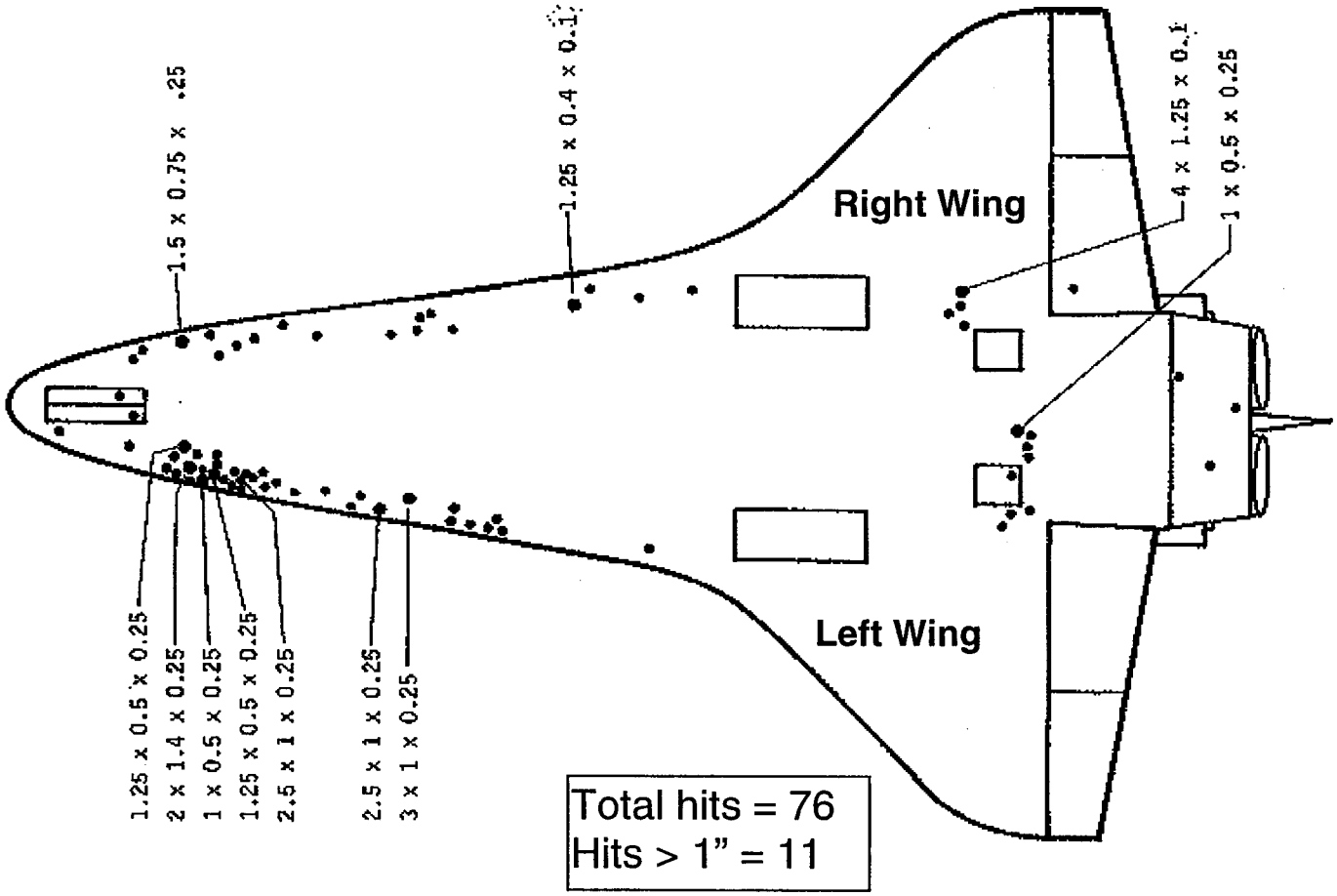

Special Topic - IFA STS-87-T-01

STS-90/ET-91, -Y Side

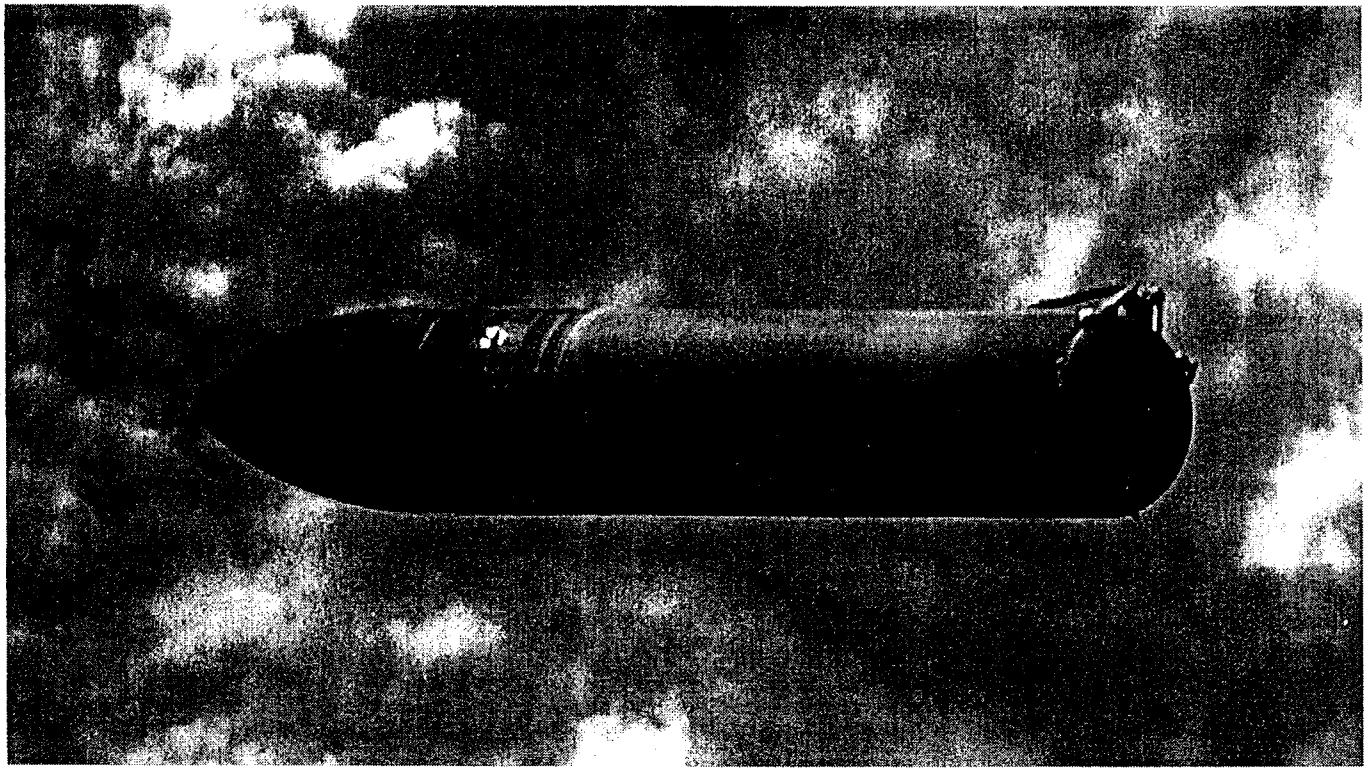

Special Topic - IFA STS-87-T-01

STS-90/ET-91, +Y Side

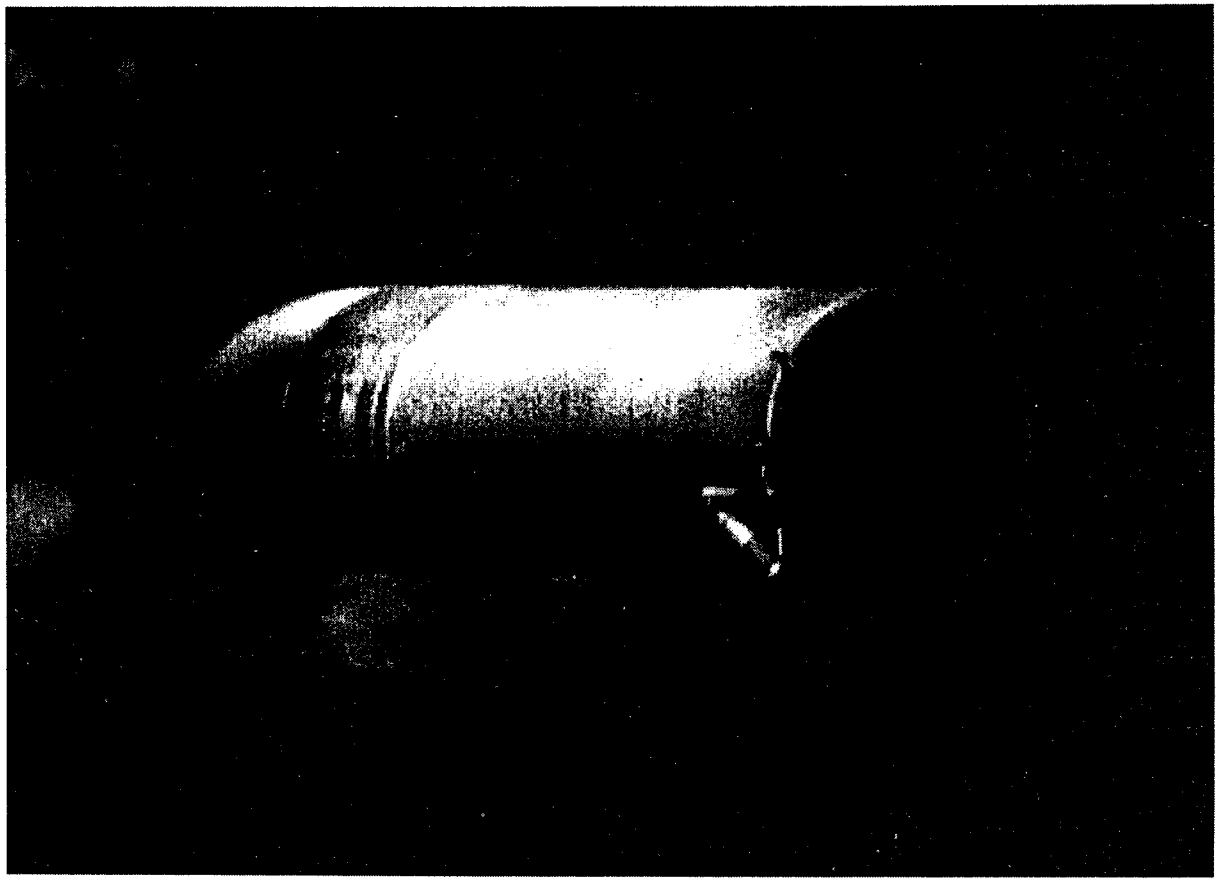

Special Topic - IFA STS-87-T-01

STS-90/ET-91, +Z Side

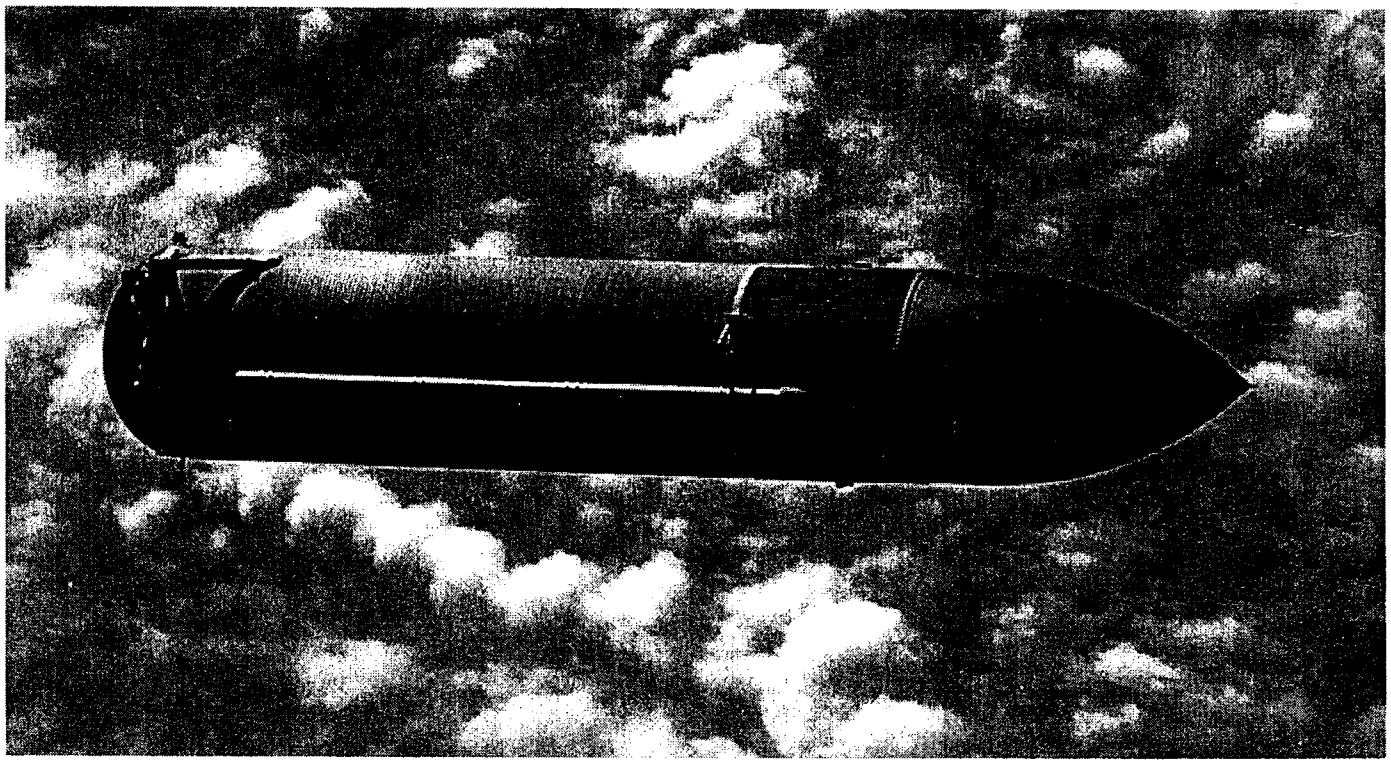

Special Topic - IFA STS-87-T-01

Discussion (continued)

- STS-91/ET-96 Intertank thrust panel configuration revised for SLWT
  - Incorporated 7 circumferential ribs on Intertank thrust panel to reduce flexure
  - Minimum foam thickness varies from 0.25" to 0.50"
  - Foam auto machined to specified minimum requirement + 0.070"
    - Factor of safety for cracking in flexure > 2.0

- Work still in progress to determine root cause scenario, develop discriminator test and define final corrective action
  - Team has performed testing that could be performed in short order
  - Higher fidelity tests with more accurate representation and combination of environments are needed

Special Topic - IFA STS-87-T-01

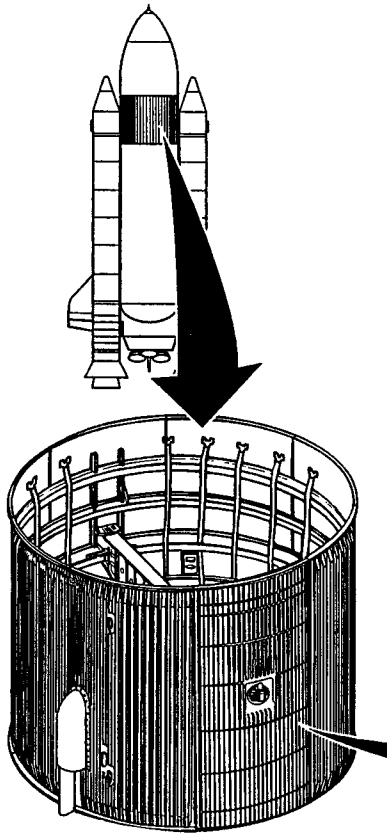

Intertank
(SLWT shown)

Circumferential Ribs
(7 places)

ET/SRB
Fitting

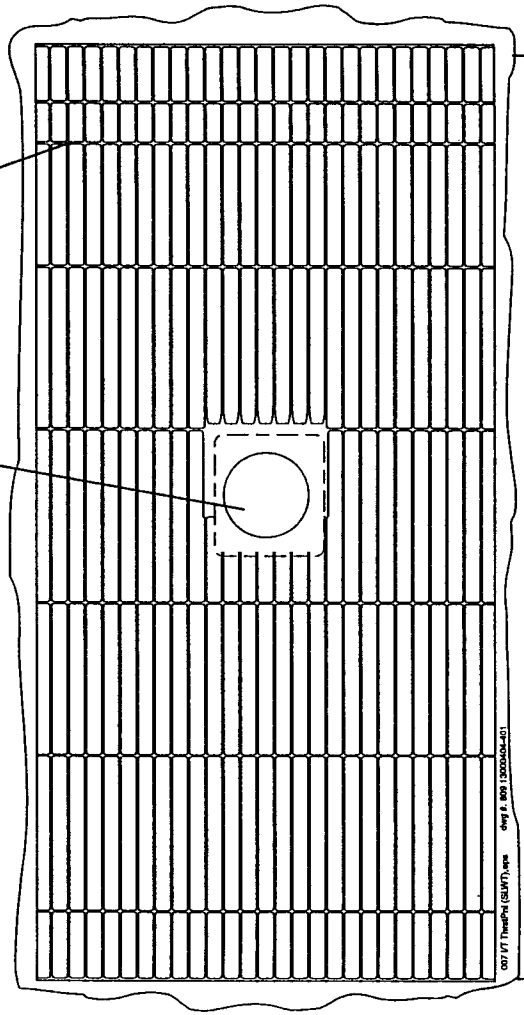

Sta 852
LO2 Tank/Intertank
Flange

Sta 1123
Intertank/LH2 Tank
Flange

STS-91/ET-96 Thrust Panel
(+Y Shown)

ET96ΔPFRgrph4250.dd.5/98

Special Topic - IFA STS-87-T-01

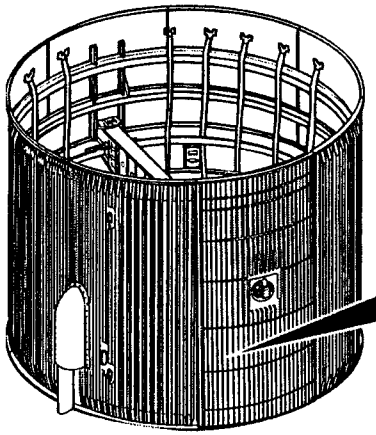

Intertank
(SLWT Shown)

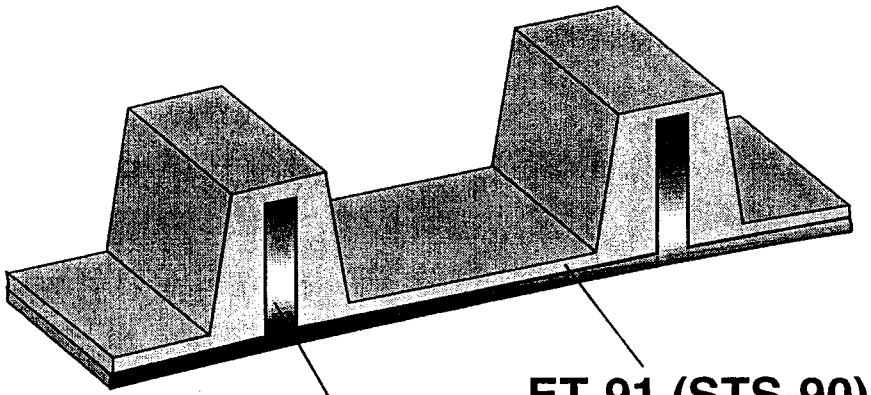

Ribs

ET-91 (STS-90) and ET-96 (STS-91) Final Thrust Panel Foam Configuration

	Typical Thickness				Bottom surface hits > 1"
	Thrust Panel		Stringer Panel *		
	Tops	Valleys	Tops	Valleys	
STS-89/ET-90	0.70"	1.3"	1.3"	1.5"	38
STS-90/ET-91	0.50"	0.50"	0.55"	0.55"	11
STS-91/ET-96	0.40"	0.40"	0.55"	0.55	-

- STS-87/ET-89 had 109 hits > 1"
- CPR Fleet Average is 13 hits >1"

* Completely machined for STS-90/ET-91 and STS-91/ET-96

Special Topic - IFA STS-87-T-01

Rationale for STS-91/ET-96 Acceptance

- Factor of safety against what is considered prime driver in foam loss (flexure) has been increased
  - SLWT configuration has seven additional circumferential ribs to reduce panel flexure
  - TPS has been machined to lower thicknesses and closer tolerances than hand sanding accomplished on STS-89 and STS-90
    - Reduced outer fiber bending stresses

- SLWT foam configuration meets all thermal design requirements

- Possible interactions of the sanded configuration with induced environments have been scrutinized and found acceptable
  - STS-90/ET-91 flight results indicate near nominal performance

- Thrust panel TPS issue reviewed and modifications accepted in STS-91/ET-96 ET/SRB mate review and STS-90/ET-91 SSV FRR

Special Topic - IFA STS-87-T-01

Additional testing since Pre-Flight Review

- STS-91/ET-96 flexure testing has confirmed FS > 2.0 for ET-96 sprayed condition/configuration

- Testing on sprays conducted around spray box in work
  - Available data indicates minor/secondary mechanical property sensitivity to spray condition
    - Retests required due to test anomalies at two conditions
  - Possible sensitivity to flexure capability indicated
    - Higher humidity (30%) resulted in higher capability than low humidity (5%)
    - ET-96 sprayed at 20% humidity
    - Re-tests will be performed to confirm

Special Topic - ET-96 Weld Repairs

Issue

- Results from ET-98 wide panel testing of an out-of-family weld repair indicated that the repair did not achieve the cryogenic design strength
  - Any similar out-of-family weld repairs on ET-96 where margins of safety are affected must be identified

Background

- SLWT project requires that all SLWT weld repairs demonstrate the expected design value by similarity (in-family), or with unique test data (out-of-family) with wide panels (19")
- ET-98 repair involved a full length automated repair that was not planished

Rationale for STS-91/ET-96 Acceptance

- ET-96 had no full length automated repairs
  - ET-96 had two independent reviews of all weld repairs (1997)
    - Emphasis on identifying all out-of-family repairs that may not have had supporting wide panel test data
    - None were identified
  - Due to the ET-98 test results, a third ET-96 review confirmed there were no repair process scenarios similar to the ET-98 repair

• Agenda

• Overview	Jim Feeley
• Prior Mission Performance Summary	
• Senior Management Review NCDs: None	
• Changes since Pre-Flight Review (4/9-10/98)	Mike Quiggle
– FEC KET-0037	
• Sanded Foam on LO2 Tank Ogive	
– Exception to NSTS 08123	Louis Palermo
• Flow Induced Vibration of LH2 Feedline Bellows	
• SRM&QA Assessment	Mike Bankester
• KSC Processing	Fred Lockhart
• Special Topics	
– Hess PDL	Chuck Williams
– IFA STS-87-T-01 Status	Steve Copsey
– ET-96 Weld Repairs	Don Bolstad
• ***Mission Unique Assessment***	***Jim Feeley***
• ***Readiness Summary***	
• ***Readiness Statement***	
• Appendices	
– A: SRM&QA Assessment	
– B: KSC Processing	

Mission Unique Assessment

as of 5/12/98

Category/Item	STS-91
• Review of MRB actions using updated environments	ECD 5/28/98
• MPS Preflight Prediction Package	ECD 5/22/98

ET-96 Readiness Summary

- Executed NSTS 07700 program plan
  - Appropriate reviews completed - All issues closed
- Independent reviews held to further identify areas concerned completed - All issues closed
- Aluminum Lithium material (2195) allowables (parent and weld) have been completed and all data certified to meet requirements that demonstrate 4 mission life requirement
- Rigorous verification program completed - No open items
- Verified as-built vs as-designed - No open items
- Hazard assessment completed - No impact to hazard controls
- ET-96 was verified to meet all requirements as a total vehicle not just changes from LWT baseline
- Design certification accepted through NASA Level I

STS-91/ET-96 Remaining Milestones

• Tanking Test	May 18
• SSV Flight Readiness Review	May 19
• Launch	June 2

ET-96 Readiness Statement

The External Tank, ET-96 is hereby certified and ready for STS-91 flight pending completion/closure of open and planned work

Terry L. Hibbard
Vice President, External Tank Project
Lockheed Martin Michoud Space Systems

Appendices

- **A: SRM&QA Assessment**
  - NCD Assessment Criteria

- **B: KSC Processing**
  - MRB Summaries
  - Alternate Blowing Agent Usage at KSC

NCD Assessment Criteria

- Assessment of all NCD Items
  - Adequacy of technical dispositions
  - Completeness of required repair/retest
  - First time occurrences/SMR
  - Verification of margin of safety assessment/documented
  - Review of impact to hazards
  - Engineering review for impact to loads
  - Engineering review for reduced extrusion to plate weld allowables

ET/SRB Wire Harness (CAPS E-164)

Issue: ET/SRB Harness failed the 1500 VDC post installation Dielectric Withstanding Voltage (DWV) Test

Background:

- Harness routes the ORB/SRB functions between the ORB/ET and ET/SRB
- Failed short is a Crit 1R
- Harness is fabricated, installed and tested at MAF
  - Pre-installation test - Harness fab
    - 8000V spark test - Wire
    - 1500V DWV test - Cable
    - 500V Insulation resistance test - Cable
  - Post-installation test - Final assembly
    - 500V Insulation resistance
    - 1500V DWV test - Failed
    - 500V Insulation resistance test - Failed
- Harness removed for failure analysis

ET/SRB Wire Harness (CAPS E-164)

Failure Analysis:

- Visual inspection
  - Damage to the Kapton® insulation on single conductor
  - Evidence of black burn mark in damaged area
- Optical microscopy
  - Scruff/scrape mark with black area on Kapton® at 6X
  - Black area "pock mark" puncture through all layers of Kapton® insulation at 32X
- Electrical test confirmed location of failure

Cause: Handling/installation damage

Corrective Action: Practitioners were briefed on the cause of the failure and re-instructed of the importance of care during installation of all electrical harnesses to minimize the possibility of undetected damage to the wire insulation

Clearance of Effectivities:

- All ETs cleared
- All ET's successfully passed the TM04 DWV Final Acceptance Test

ET-96 DR/PR/OMRSD Waiver/Exceptions

as of 5/12/98

System	Discrepancy	Problem	MRB Items	Exceptions/ Waivers
Electrical	1	0	0	0
Propulsion/ Pneumatics	0	4 (4)	1 (1)	0
Structures	3	4 (2)	1	1
Thermal (TPS)	0	10 (5)	6 (3)	0
Total	**4**	**18 (11)**	**8 (4)**	**1**

(*) Previously discussed at Pre-Flight Review

ET-96 PR/MRBs - Summary, Propulsion

PR No./Status	Title/Description	Disposition
Propulsion		
PET-96-FP- 0003 *	GFP LH2 disconnect roller arm housing brazing was filed through to the foam during 0.003" clearance verification between roller arm and roller arm housing	• Use as is • No effect on disconnect operation
Structure		
PET-96-ST-0006	Ding approximately 0.3" x 0.2" x 0.05" deep (no raised metal) on Station 1082 ring frame directly below access door opening	• Visual inspection to be performed at KSC following tanking test

(*) Previously discussed at Pre-Flight Review

ET-96 PR/MRBs - Summary, TPS

PR No./Status	Title/Description	Disposition
PET-96-TS-0001 *	MBO resin is peeling/flaking on the top (-X) side of the LO2 umbilical	• Use as is
PET-96-TS-0004 *	Area of crushed foam on the -Y ET/SRB aft fairing assembly lower half (0.5" dia. X0.37" dia.)	• Use as is • Loose foam removed • Remaining foam thickness 1.53" provides adequate thermal protection
PET-96-TS-0005 *	Lower -Z corner of LH2 cable tray PDL foam is broken (damage is 1.5" X 1.0" X 0.8")	• Use as repaired using PDL • Additional bondlines will have no affect on closeout performance

(*) Previously discussed at Pre-Flight Review

ET-96 PR/MRBs - Summary, TPS

PR No./Status	Title/Description	Disposition
PET-96-TS-0006	SLA broken off of the inboard upper corner of the -Y cross strap fairing support plate	• Use as repaired using SLA
PET-96-TS-0007	Area of underfill (0.5" x 0.875" x 0.5") located at the upper right hand corner of the +Z splice plate closeout of the +Y fairing	• Discrepant area trimmed and repaired with PDL
PET-96 -TS-0010	LH2 umbilical cable tray has 3 areas of crushed foam - Each area approximately 2 sq. in.	• Use as repaired using PDL – Trim/repair in work at KSC

ET-96 Alternate Blowing Agent Usage at KSC

as of 5/12/98

Foam	Document	Description	Location	Size
SS-1171 *	T5141	Aft hardpoint closeout	Sta 1973 - 2076, 180°	4410 sq. in.
PDL-1034 * (Lot 1)	PR-TS-0005	LH2 umbilical cable tray	Sta 2090, 337°	2 sq. in.
PDL-1034 (Lot 1)	T5249	ET/SRB aft fairing closeout	Sta 2058, 70-290°	240 sq. in.
PDL-1034 (Lot 3)	T5244	ET/Orbiter jack pad closeout	Sta 1129, 15-345°	9 sq. in.
PDL-1034 (Lot 3)	PET-TS-0010	LH2 umbilical cable tray	Sta 2090, 337°	2 sq. in. each

(*) Previously discussed at Pre-Flight Review

FLIGHT READINESS STATEMENT
STS-91/ET-96
EXTERNAL TANK PROJECT
Δ PRE-FLIGHT REVIEW

EXTERNAL TANK ET-96/STS-91, AS IDENTIFIED IN THE EXTERNAL TANK PROJECT DELTA PRE-FLIGHT REVIEW DATED MAY 28 & 29, 1998, IS CONSIDERED READY TO SUPPORT FLIGHT UPON ACCEPTABLE DISPOSITION OF OPEN/PLANNED WORK AND/OR OPEN ACTIONS.

J. L. LUSK/EE31

B. E. GOLDBERG/ED01

A. F. WHITAKER/EH01

M. D. SMILES/CR70

for A. O. HARRIS/CR01

P. V. COUNTS/SA31, CHAIRMAN

May 29, 1998

Space Shuttle
External Tank

STS-91/ET-96
Delta Pre-Flight Review No.2

MAY 29 '98 13:30

5042574405 PAGE.01

LO2 Tank Ogive Foam

Issue

- Postulated contour deviations on STS-91/ET-96 LO2 tank forward to aft ogive weld could result in TPS cracking when tank is pressurized

Background/Discussion

- Contour deviations discovered during peaking measurements taken on ET-100
  - Initiated re-review of visual contour deviation inspection criteria
  - No criteria to quantify contour deviations existed
- Peaking measurements taken on ET-96 indicate potential for contour deviations at Station 536 near +Z area which could cause as-sprayed TPS to crack when tank is pressurized

5042574405 PAGE.02

MAY 29 '98 13:30

LO2 Tank Ogive Foam

Rationale for STS-91/ET-96 Acceptance

- Local sanding of TPS over suspect areas (100" L x 11" W) reduces TPS outer fiber strain and increases strain capability of foam
- All other ET weld locations assessed
  - Not an issue due to previous contour inspection with contour gages, TPS thickness, or tank structure thickness
- No structural issue with suspect contour deviations
- Stress analysis: TPS Factor of Safety = 1.23 (failure mode: flexural strain)
  - Required = 1.1
- Reduced TPS thickness meets all aero/thermal requirements (ground, ascent, and re-entry)
- All spray conditions, as measured properties, etc. - nominal
- Debris assessment - HGF tests conducted to assess debris potential of sanded configuration
  - Results discussed on following charts

MAY 29 '98 13:31 5042574405 PAGE.04

Hot Gas Test Summary

Issue

- Sanded area has / has not increased the likelihood of TPS debris from the forward ogive?

Discussion

- Hot gas tests performed of 3 regions of sanded areas

Configuration	Description	Pass	Fail
A	12 degree fwd facing ramp	3	0
B	45 degree / 12 degree ramp intersection	3	0
C	20 degree aft facing ramp	8	1*
	Control panel (net spray)	1	0

*Divot 3.7" x 5.5" x 1.9" deep in 20 degree ramp. Root cause not identified

- Previous flight experience of somewhat similar (but not exact) configurations and heating rates
  - Potentially, divot mechanism requires exact thermal, geometry, and properly configured

ET96AA.3000.nw.5/98

5042574405 PAGE.05

MAY 29 '98 13:31

Hot Gas Test

Forward End Aft Facing Ramp

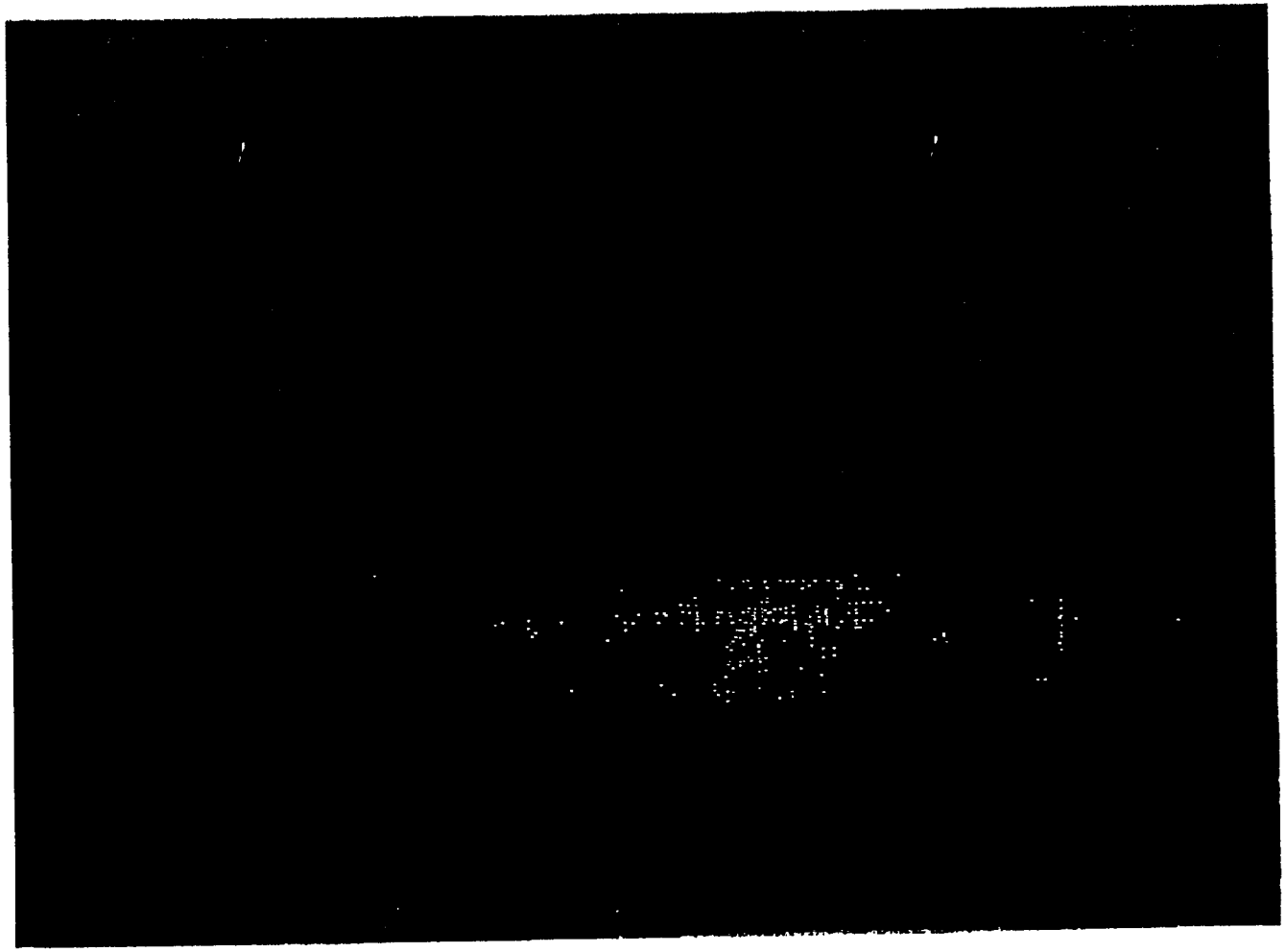

MAY 29 '98 13:31 5042574405 PAGE.06

Hot Gas Test Panel "Failure"

- Debris loss from Configuration "C" panel not understood
  - Relationship of sanded configuration to divot formation unknown
  - No debris of this size in historical NCFI hot gas facility testing
  - Debris size approximately 9 in^3 (0.2 oz)
  - No anomalous fabrication data on spray panels
  - Characterization for low probability, unique debris mechanisms remains immature
    - Tests simulation range from representative to conservative

5042574405 PAGE.07

MAY 29 '98 13:32

Debris Assessment

- BNA analysis of tile damage

Assumed Particle Size (in)	Critical Mach No.	Particle Volume * (in^3)	Initiation Location (degree from +Z)		
			0 degree	15 degree	30 degree
6" x 3" x 1"	2.5	18	Hits NRCC	Orbiter lower surface 5.3 "L x 1.2"W x 1.5"D	Passes over wing
8" x 4" x 1"	2.5	32	Hits NRCC	Orbiter lower surface 6.3"L x 1.2"W x 1.8"D	Passes over wing

- Analysis of Orbiter structural assessment
  - No safety of flight concern
  - Would require smart particle of 2 to 4 times volume of HGF test data to cause structural damage
  - Estimate of 8 tile replacements with no impact to operations flow

ET98ΔΔ.3000.nw.5/98
5042574405 PAGE.08
MAY 29 '98 13:32

Risk Assessment by Technical Community

- Consensus opinion that "catastrophic" 'failure severity level is improbable

- Assessment of the risk for "critical" severity level did not result in consensus and ranged from "improbable" to "infrequent" for likelihood-of-occurrence

- Assessment of "severity level" is in-work by Level II analysts

5042574405 PAGE.09

MAY 29 '98 13:32

Risk Assessment

Severity Level:

Marginal - Minor damage to flight vehicle which can be tolerated without loss of objectives or repaired without significant program delay

Critical - Damage to flight vehicle which would cause a degraded mission or a significant program delay

Catastrophic - Loss of mission

Likelihood of Occurrence:

Probable - Expected to happen on STS-91

Infrequent - Could happen on STS-91. Hazard controls have significant limitations or uncertainties

Remote - Could happen on STS-91, but not expected. Hazard controls have minor limitations or uncertainties.

Improbable - Extremely remote possibility of occurrence on STS-91. Strong controls in place.

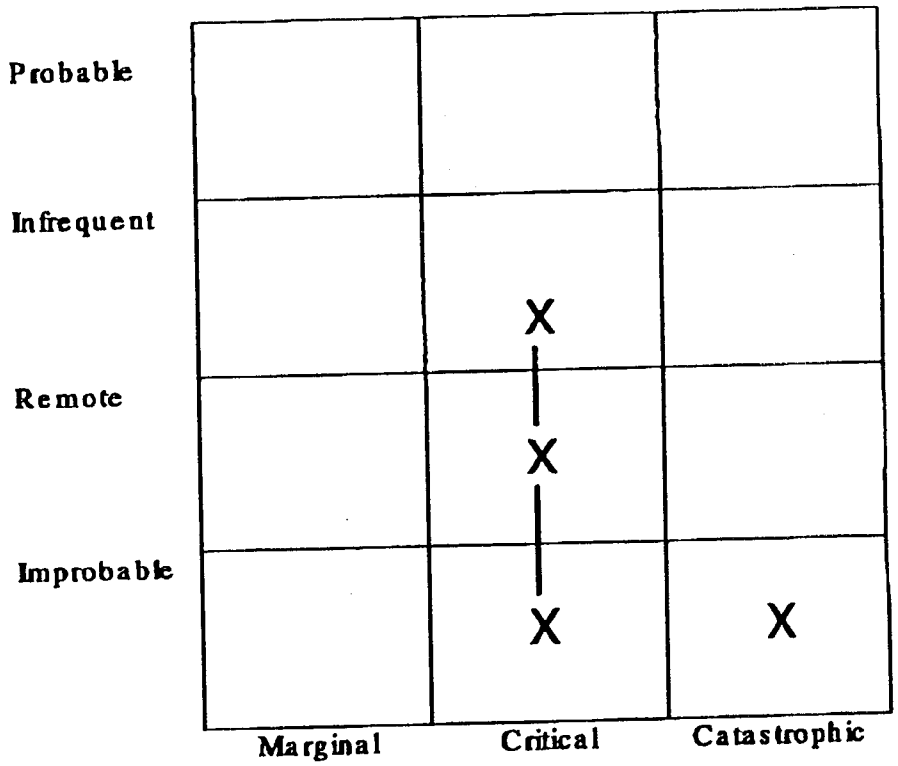

ET96AA.3000.nw.6/98
5042574405 PAGE.10
MAY 29 '98 13:32

Conclusion

- No safety of flight concern
- One test panel of 15 generated debris greater than success criteria and root cause is not defined
- ET-96 is safe to fly

The External Tank, ET-96 is hereby certified and ready for STS-91 flight pending completion/closure of open and planned work

Terry L. Hibbard
Vice President, External Tank Project
Lockheed Martin Michoud Space Systems

Back-Up Data

Event Tree (Logic Trail)

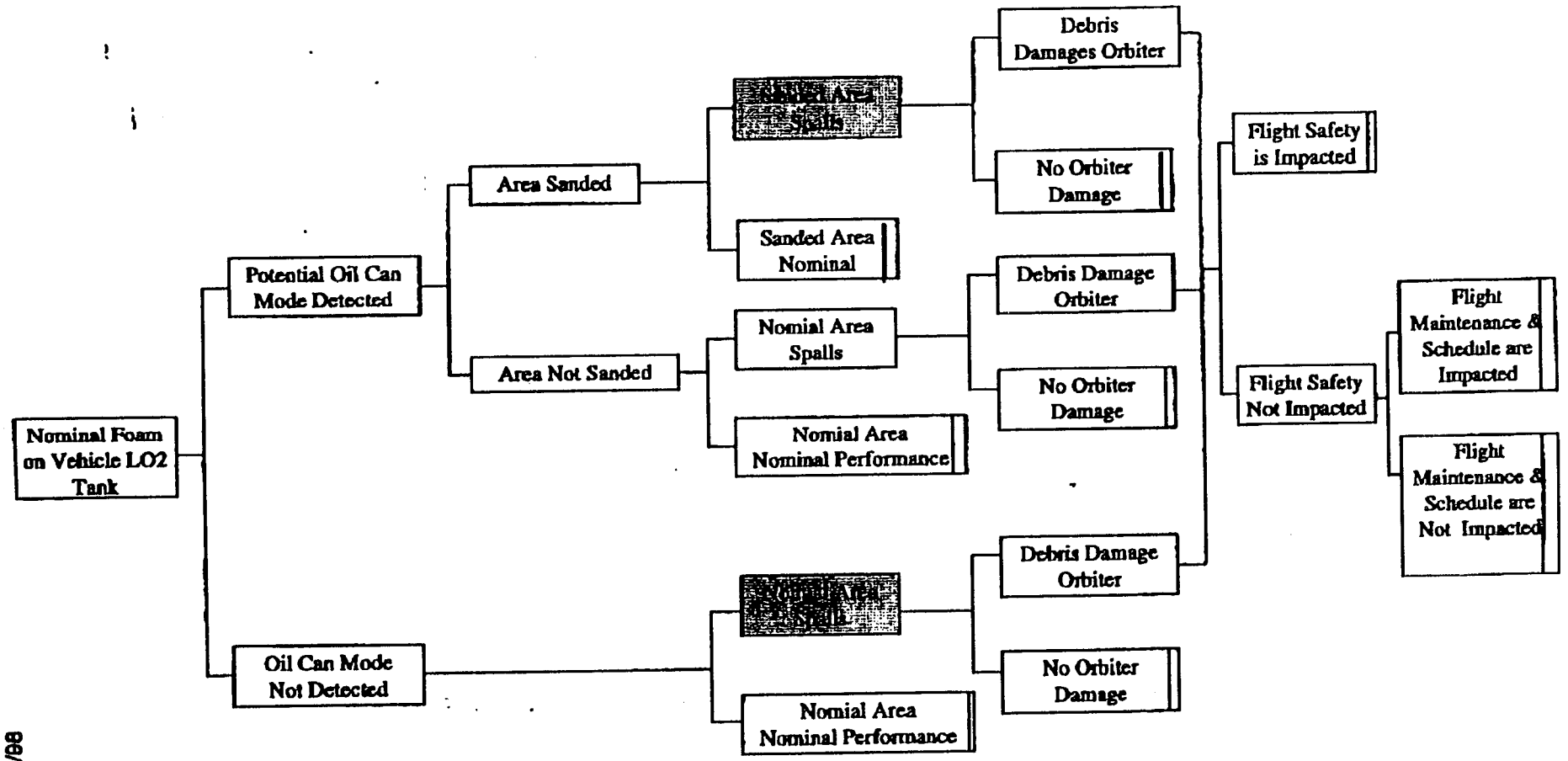

ET98AA.3000.nw.5/98
5042574405 PAGE.14
MAY 29 '98 13:34

Similitude Assessment

ET Configuration	Material	Ramp Angle Fwd/Aft	Sanded or Unsanded Ramp?	Exposed Knit Lines?	Vehicle Flow Charact-erization	Boundary Layer Thickness (IN.) @ Mach=1.55 t = 60 sec.	Local Pressure (psia) @ Mach=1.55 t = 60 sec.(local ambient + dynamic)	Local Pressure (psia) @ Mach 4 t = 120 sec. (local ambient + dynamic)	Convective Heat Transfer Coefficient	Erosion Rate	Test/ Flight Experience
ET-96 Sanded Foam	NCFI 24-124	18°/12°	Sanded	Yes	Reattached flow aft of 12° ramp	3.0	9.0-9.4	less than 1.	4.04	.182	None
Forward Ogive (Pencil Sharpened) Area	NCFI 24-124	NA/° (° 40° to flight direction)	Sanded	Yes	ET bow shock attached flow, turbulent boundary layer region	0.9 FWD 1.3 AFT	11.4-13.2	less than 1.	7.72	.351	Flown since ET-86. Flight pictures show no visible foam loss
ET-91 Thrust Panel Frame Clearance	NCFI 24-124	30° to 45°	Sanded	Yes	High interference region. ET, SRB & Orbiter Bow shocks, ET/SRB attach structure interference/separated flows	7.0	4.3-10.9	less than 1.	6.98	.389	Flight pictures show no visible foam loss
Aft Edge of Intertank Door	NCFI 24-124	NA/90°	Sanded	Yes	ET & SRB Bow shocks, ET/SRB attach structure interference/separated flows	7.5	6.6-8.7	less than 1.	3.22	.151	Flight pictures show no visible foam loss
Test Panels with Fabricated Divots	NCFI 24-124	90°/90°	Sanded	Yes	NA	NA	1.0		3.5 to 10.0	NA	No debris larger than normal ablation products

MAY 29 '98 13:34 5042574405 PAGE.15

Similitude Assessment

ET Configuration	Material	Ramp Angle Fwd/Aft	Sanded or Unsanded Ramp?	Exposed Kick Lines?	Vehicle Flow Characterization	Boundary Layer Thickness (IN.) @ Mach=1.55 t = 60 sec.	Local Pressure (psia) @ Mach=1.55 t = 60 sec.(local ambient + dynamic)	Local Pressure (psia) @ Mach 4 t = 116 sec. (local ambient + dynamic)	Convective Heat Transfer Coefficient	Erosion Rate	Test/ Flight Experience
Intertank Splice Flange Foam Closeout	BX-250/ SS-1171	60°±5°/5 0°±5°	Sanded	Yes	High interference region. ET, SRB & Orbiter flow shocks, ET/SRB attach structure interference/separated flows	5.9	4.4-11.1	less than 1.	2.14	.116	Flight pictures show no visible foam loss
LO2/LH2 PAL Ramp	BX-250/ SS-1171	NA/15°±2 °	Sanded	Yes	High interference region. ET, SRB & Orbiter flow shocks, ET/SRB attach structure interference/separated flows	4.9 FWD 6.4 AFT	5.4-10.9	less than 1.	2.86	162	Flight pictures show no visible foam loss
LH2 Bipod Ramp	BX-250/ SS-1171	NA/30°-22°	Sanded	Yes	High interference region. ET, SRB & Orbiter flow shocks, ET/Orbiter & ET/SRB attach structure interference/separated flows	8.4	7.6-9.2	less than 1.	5.38	.372	Flight pictures show no visible foam loss

MAY 29 '98 13:34 5042574405 PAGE.16