STS-54 & STS-55 LEVEL III
FRR READINESS STATEMENT

ET PROJECT

EXTERNAL TANKS ET-51 & ET-56 IDENTIFIED IN THE STS-54 & STS-53 FLIGHT READINESS REVIEW, DATED DECEMBER 17, 1992, ARE CONSIDERED READY TO SUPPORT THEIR RESPECTIVE FLIGHTS UPON ACCEPTABLE DISPOSITION OF OPEN WORK AND OPEN ACTIONS.

H. GARRETT, EB21

J. MITCHELL, EL01

M. PESSIN, EE31

R. JACKSON, CP11

C. KEY, EH01

FOR R. BLEDSOE, CQ21

H. SMYLY, EP01

G. LADNER, SA01

L. FOSTER, ED33

P. V. COUNTS, SA31
CHAIRMAN

NC

December 17, 1992

Space Shuttle
External Tank

Delta ET Project

STS-54/ET-51 & STS-55/ET-56 Flight Readiness Review

Notes - KSC

1) QUESTION STILL OPEN ON GUEP LEAKAGE

2) ET56 OUT OF SPEC UMBILICAL LEAKAGE ACCEPTANCE BY RI

3) 1ST TIME FLOWN He INJECT BOX CLOSEOUT VIA ENGR - FLOWN AS MRB'S - SIL UPDATE

4) VIBRATION ISOLATOR ACTION CLOSURES

MARTIN MARIETTA
MANNED SPACE SYSTEMS

Agenda

- Overview — Dick Rogers
- Mission Performance Summary — Frank Ramsey
  - STS-52/ET-55 (10/22/92)
  - STS-53/ET-49 (12/02/92)
- Mission Highlights — Ameen Sarkees
- ET Highlights — Ameen Sarkees
- Changes — Ameen Sarkees
- SMRBs: No new items — Ameen Sarkees
- SRM&QA Assessment — Ameen Sarkees
- KSC Processing — Ameen Sarkees
- Verification/Certification - Status — Ameen Sarkees
- Mission Unique Assessment — Ameen Sarkees
- Readiness Statement — Dick Rogers
- Appendices
  - A: Minor Changes/Substitutions
  - B: SRM&QA
  - C: KSC Processing
  - D: Previously addressed material

Overview

- Review covers changes/differences/non-conformances not previously flown and/or reviewed

- This Delta review for STS-54/ET-51 and STS-55/ET-56 includes:
  - Performance summaries for Missions STS-52/ET-55 and STS-53/ET-49
  - Items not previously addressed at prior Block 9 FRRs
  - Items specific to missions STS-54 and STS-55
  - Details of previously addressed items are available in appendix

• **FRR Series**	**STS-54/ET-51**	**STS-55/ET-56**
- Block 9 (ETs 51-60)		
• MMC Corporate	10/21/91	10/21/91
• ET Project/SRM&QA PFA (Baseline)	10/22/91	10/22/91
- Mission Specific Reviews		
• ET/SRB Mate	11/3/92	12/21/92 (under review)
• Delta Corporate	12/7/92	12/7/92
• Delta ET Project (Baseline)	12/17/92	12/17/92
• Associate Administrator FRR	12/22/93	2/11/93
• Mission Management Team (L-2 Day)	1/11/93	2/23/93
• Launch	1/13/93	2/25/93

MARTIN MARIETTA
MANNED SPACE SYSTEMS

Mission STS-52/ET-55 Performance Summary

Launch 10/22/92

System	Performance
OMRSD/LCC	GUCP H2 concentration violated LCC limit during topping*
Instrumentation	Nominal
MPS	Nominal
Hazardous Gas	*
TPS	Nominal
ET Disposal	• Intact impact point within predicted footprint - 12.89 deg N - 163.39 deg W • Approximately 103 NM uprange from preflight prediction
Orbiter Tile Damage	Less than average

* Discussed on subsequent charts

MARTIN MARIETTA
MANNED SPACE SYSTEMS

STS-52/ET-55 GUCP H2 Concentration

Issue:

- High H2 concentration at the GUCP (Ground Umbilical Carrier Plate) 7" QD observed during STS-52/ET-55 propellant load operations

Discussion:

- H2 concentration of 10,000 ppm in the GUCP purge cavity during initiation of slow fill
- Concentration monitored and managed throughout countdown
  - Exceeded LCC limit (44,000 ppm) once during topping
- S/N 240 7" QD used on 5 previous launches with no detectable concentrations
  - Pre-flight inspections/functional tests nominal
- STS-52/ET-55 post launch hardware inspection/functional tests and GUCP separation film - No anomalies
- Most probable cause - Movement of probe seal interface after hook-up to facility

STS-52/ET-55 GUCP H2 Concentration

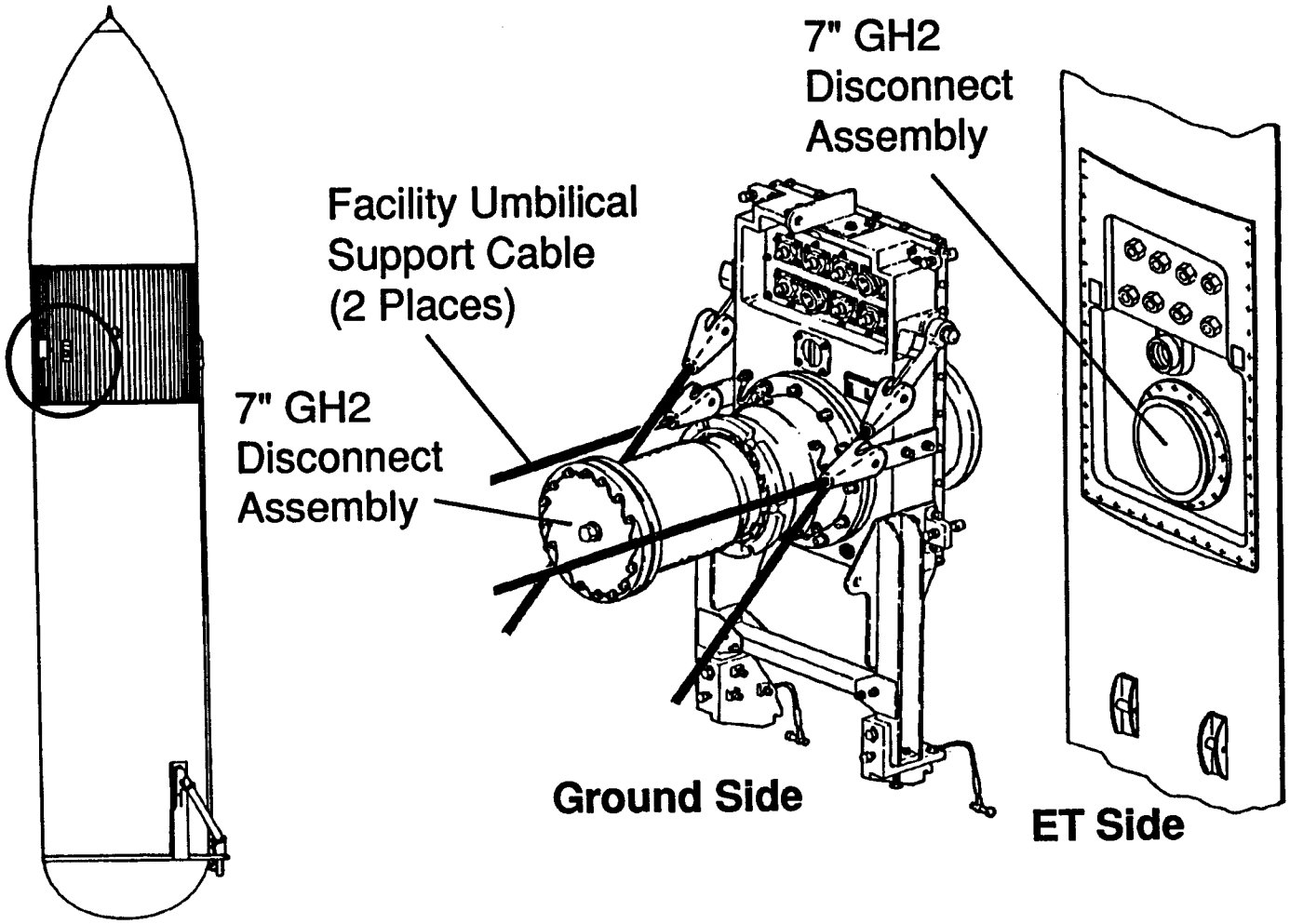

MARTIN MARIETTA
MANNED SPACE SYSTEMS

STS-52/ET-55 GUCP H2 Concentration

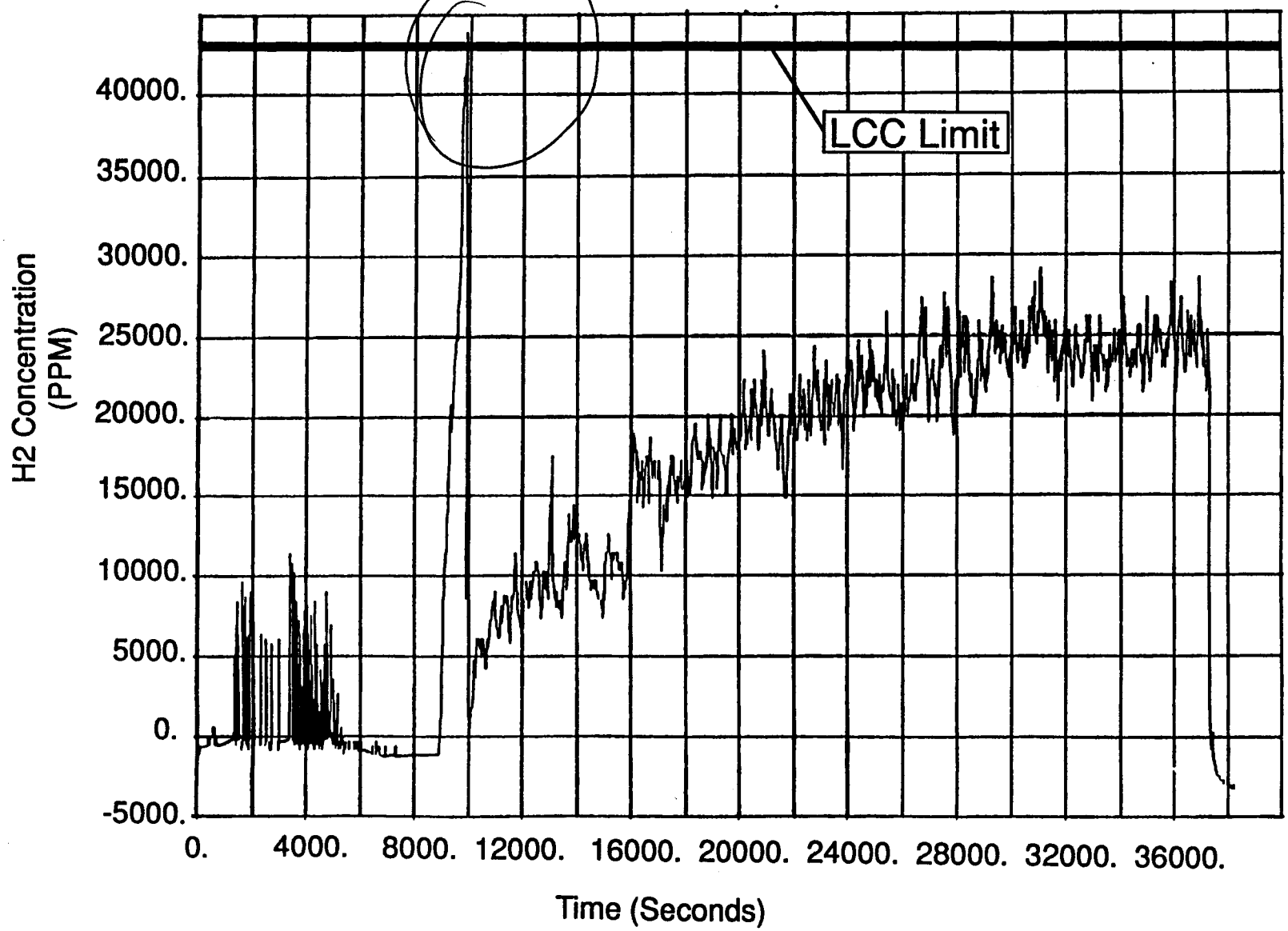

STS-52/ET-55 GUCP H2 Concentration

Actions Taken:

- Borescope inspection of STS-53/ET-49 hardware to verify alignment - No anomalies
- Functional/leak test of bellows - Nominal
  - Actual: <46 sccm
  - Requirement: <200 sccm
- New leak test of assembly after GH2 vent line connection of STS-53/ET-49 at pad completed on 11/20/92 - No leakage
  - Vent line pressurized with 6 psi GHe
  - GUCP cavity purge, 10 scfm GN2
  - Turbo mass spec measures GH2 in GN2
- Reviewed contingency trouble shooting procedures (S1004) for adequacy
- No leakage detected during STS-53/ET-49 loading

Conclusions:

- Leak test of assembly after vent line connection at pad will improve confidence in proper alignment during cryo load
- Contingency procedures for H2 concentration optimize launch probability

MARTIN MARIETTA
MANNED SPACE SYSTEMS

Mission STS-53/ET-49 Performance Summary

Launch 12/02/92

System	Performance
OMRSD/LCC	No violations
Instrumentation	Nominal
MPS	Nominal
Hazardous Gas	Nominal
TPS	Acreage ice/frost exceeded LCC limit of 1/16" thickness in the debris zone at beginning of launch window • Launch delayed approximately 1.5 hours to allow sun to melt ice • ~~"Red"~~ ICE team reinspected to verify that ice/frost was within limits
ET Disposal	• Intact impact point within predicted footprint - 40.95 deg S - 152.60 deg W • Approximately 17 NM uprange from preflight prediction
Orbiter Tile Damage	Not available at reproduction deadline

MARTIN MARIETTA
MANNED SPACE SYSTEMS

Agenda

- Overview — Dick Rogers
- Mission Performance Summary
  - STS-52/ET-55 (10/22/92)
  - STS-53/ET-49 (12/02/92)
- Mission Highlights — Frank Ramsey
- ET Highlights — Ameen Sarkees
- Changes — Dick Rogers
- SMRBs: No new items
- SRM&QA Assessment
- KSC Processing
- Verification/Certification - Status
- Mission Unique Assessment
- Readiness Statement
- Appendices
  - A: Minor Changes/Substitutions
  - B: SRM&QA
  - C: KSC Processing
  - D: Previously addressed material

MARTIN MARIETTA
MANNED SPACE SYSTEMS

Mission Highlights

	STS-54/ET-51	STS-55/ET-56
• **Launch**	1/13/93	2/25/93
- Window	08:52-11:10 EST	09:50 - 12:40 EST
- Pad	39B	39A
- Orbiter	Endeavour (OV-105)	Columbia (OV-102)
- Orbital inclination	28.45 deg - Direct insertion at 160 NM	28.45 deg - Direct insertion at 160 NM
- ET Photo coverage	Crew photos from cockpit window Umbilical well cameras	Crew photos from cockpit window Umbilical well cameras
• **Mission Payload**	Tracking Data Relay Satellite (TDRS-F/IUS)	Spacelab (SL-D2)
• **Landing**	1/19/93	3/6/93
- Time	08:17 EST	07:55 EST
- Location	Kennedy Space Center	Kennedy Space Center

MARTIN MARIETTA
MANNED SPACE SYSTEMS

ET Highlights

	STS-54/ET-51	STS-55/ET-56
• **DD250 acceptance**	2/3/89	5/10/90
- Shipped to launch site	8/14/92	9/24/92
- Age at launch	48 months	33 months
• Certification: 72 months		
• **Umbilical acceptance data**		
- LH2 umbilical has been changed out	Removed S/N 2031 Installed S/N 4202	Removed S/N 6805 Installed S/N 2020
• Acceptance leak test results at LH2 temperatures	294 scim at 40 psig	116 scim at 40 psig
• Allowable = 500 scim		
- LO2 umbilical	S/N 2129	S/N 5606
• Acceptance leak test results at LO2 temperatures	31 scim at 50 psig	52 scim at 50 psig
• Allowable = 50 scim		
• **GO2 pressure line section removal/ replacement**	Included in Appendix D - Previously presented to Level II (11/3/92)	Not applicable
• **Nose cone**	No AADS	AADS

check RI Acceptance Paper

MARTIN MARIETTA
MANNED SPACE SYSTEMS

Changes - List

Description	STS-54/ET-51	STS-55/ET-56	Presentation
Previously presented at Block 9			
• AADS test requirements (B01643H)		X	Appendix D
• Intertank structure assembly (B80120AH)		X	Appendix D
Not Previously Presented/Flown			
• Helium inject tube thermal wrap (FEC KET-0026)		X	Appendix A
• Nose Cone fairing tool/cover (B01807D)	NOT 1ST TIME FLOWN	X (PREVIOUS BY FLOW DISPOSITION)	Appendix A
• Launch site TPS process enhancements (B01972)	X	X	To be presented

MARTIN MARIETTA
MANNED SPACE SYSTEMS

Launch Site TPS Process Enhancements (B01972)

Reason: Launch enhancement - KSC Working Group recommendations to streamline/enhance TPS processes at launch site

Description: Three tasks

- Task 1 - Reduce helium inject box closeout 2-step process to 1-step process
  - Was: Pour using bag method and machine
  - Now: As-poured mold
- Task 2 - Third hard point substrate primer touch-up
  - Was: KSC MRB required for primer touch-up
  - Now: Allow primer touch-up per Closeout Drawing and allow chem-film usage
- Task 3 - Post-build Acceptance Manual
  - Added LO2/LH2 umbilical disconnect TPS acceptance criteria to manual

- Reqmts/ Documentation: Update CIL to revise view callouts and ICD to identify new mold lines

Basis for Certification:

- Task 1: 1-step process validated on test lab mock-up at MAF
- Task 2: Materials analysis - Chem-film provides adequate corrosion protection (Primer applied at scheduled TPS closeout)
- Task 3: Complies with established MMC/Rockwell finished product acceptance criteria

MARTIN MARIETTA
MANNED SPACE SYSTEMS

Launch Site TPS Process Enhancement (B01972)

Heluim Inject Box

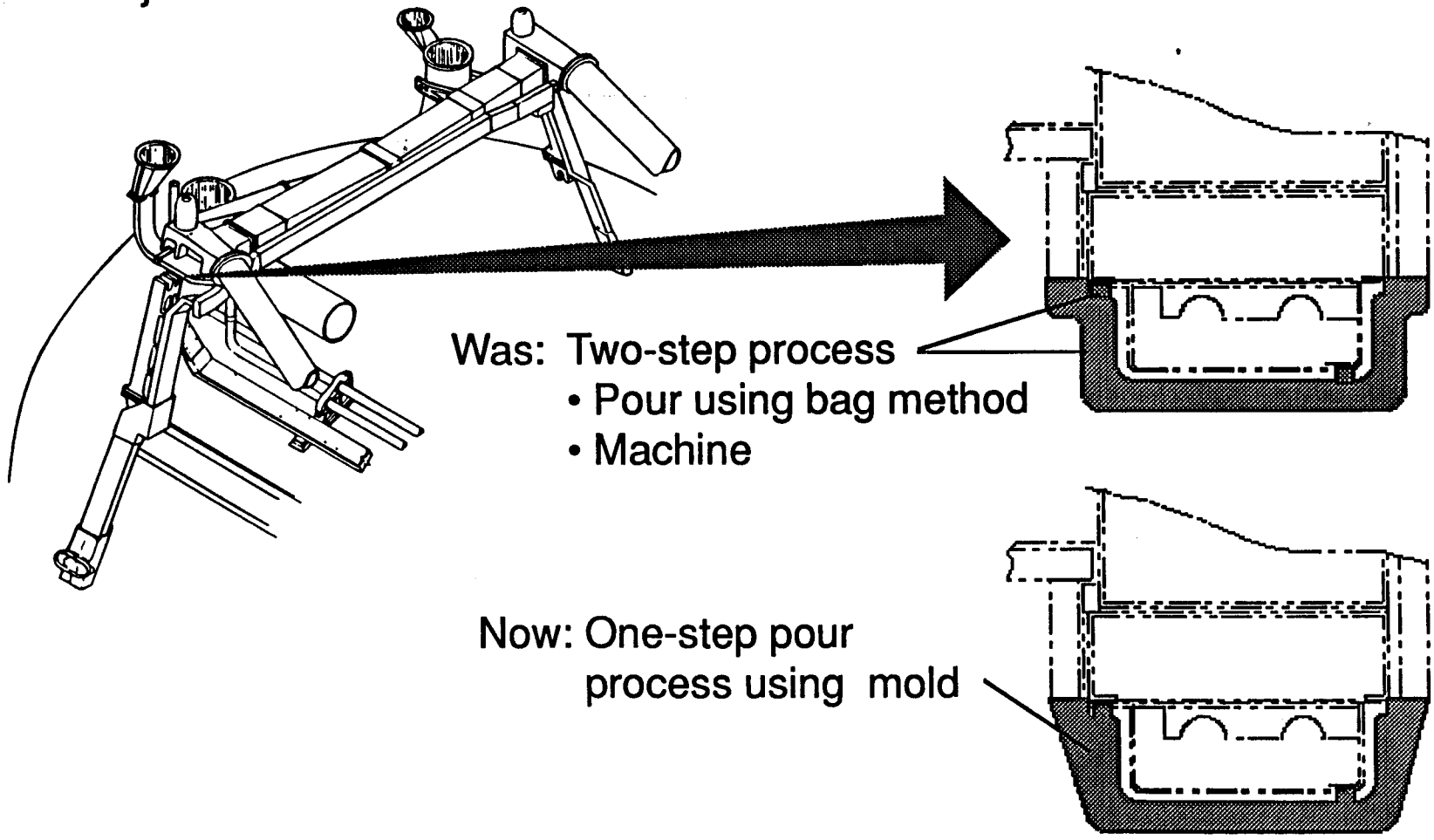

Was: Two-step process
- Pour using bag method
- Machine

Now: One-step pour process using mold

MARTIN MARIETTA
MANNED SPACE SYSTEMS

Launch Site TPS Process Enhancement (B01972)

Third Hard Point Substrate Primer

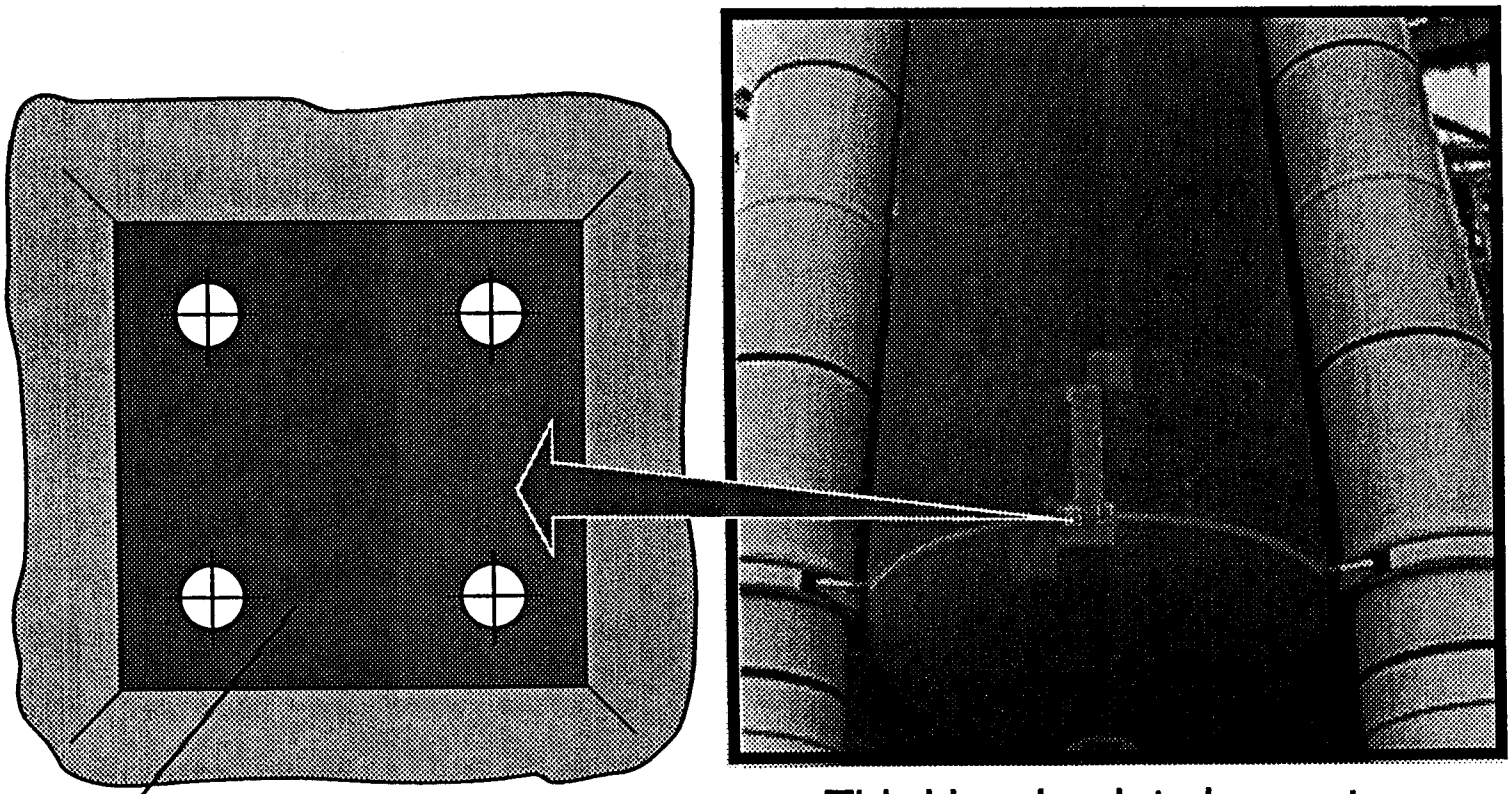

Third hard point closeout

- Chem film at MAF
- Apply primer at KSC prior to foam application per closeout drawing

MARTIN MARIETTA
MANNED SPACE SYSTEMS

Launch Site TPS Process Enhancement (B01972)

LO2/LH2 Umbilical TPS Acceptance Criteria

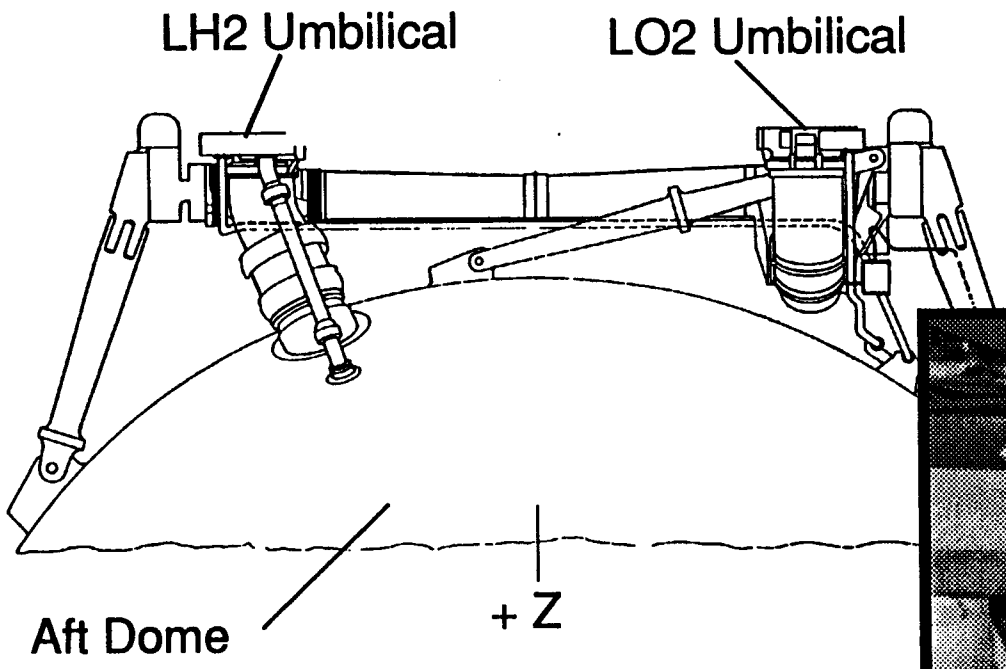

- Added umbilical TPS acceptance criteria to post-build acceptance manual

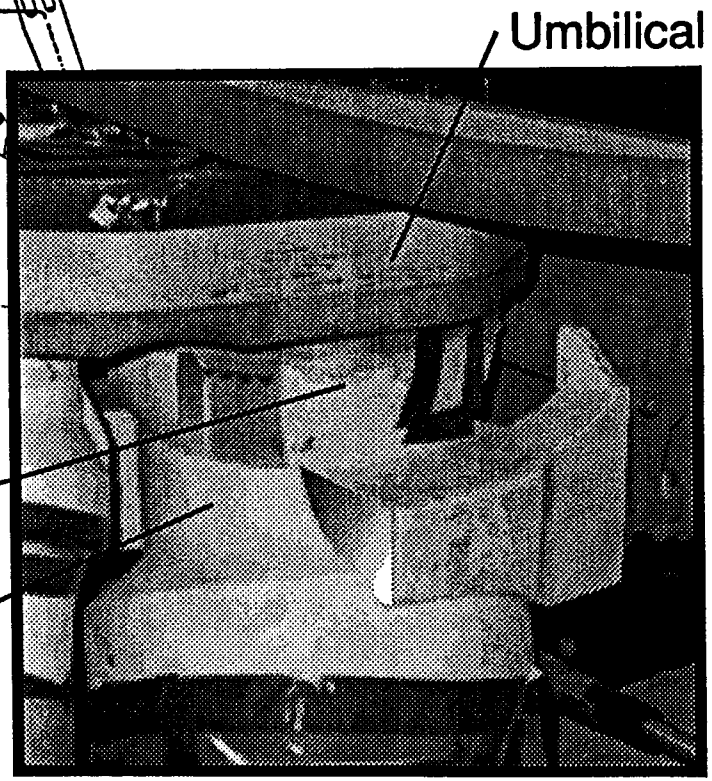

MARTIN MARIETTA
MANNED SPACE SYSTEMS

SMRBs - List

Previously Presented at Block 9 FRR - Included in Appendix D

Description

STS-54/ET-51: None

STS-55/ET-56

- Gas hole in GH2 pressure line mid fixed assembly longitudinal weld (T097992)
- Porosity in LH2 feedline internal circumferential weld (T093884)
- LH2 barrel contour deviation (T100315)

Agenda

• Overview	Dick Rogers
• Mission Performance Summary	
- STS-52/ET-55 (10/22/92)	
- STS-53/ET-49 (12/02/92)	
• Mission Highlights	
• ET Highlights	
• Changes	
• SMRBs: No new items	
• SRM&QA Assessment	Frank Ramsey
• KSC Processing	Ameen Sarkees
• Verification/Certification - Status	Dick Rogers
• Mission Unique Assessment	
• Readiness Statement	
• Appendices	
- A: Minor Changes/Substitutions	
- B: SRM&QA	
- C: KSC Processing	
- D: Previously addressed material	

MARTIN MARIETTA
MANNED SPACE SYSTEMS

SRM&QA Assessment

Item	Status
Alerts	None
MRB Assessment	Complete - No issues/no impact to hazard controls
	STS-54/ET-51 / STS-55/ET-56
• MRB MARS	362 / 355
• PR/MRBs	10 / 4
Hazard Assessment	Complete - All hazards reports were re-assessed and hazard controls verified • Hazard Report E.02, RSS Ordnance Malfunction updated to reflect RSS enclosure vibration isolator criticality*
Corrective Action Problem Summary (CAPS)	No constraints
• ICD violations on LH2 feedline umbilical disconnect (P-068)	Deferred until 5/23/93 • All ETs sucessfully passed leak test • Cause and corrective action investigation in progress at vendor (AHP), ECD 5/10/93

* To be presented with "Verification/Certification - Status"

MARTIN MARIETTA
MANNED SPACE SYSTEMS

Agenda

- Overview
- Mission Performance Summary
  - STS-52/ET-55 (10/22/92)
  - STS-53/ET-49 (12/02/92)
- Mission Highlights
- ET Highlights
- Changes
- SMRBs: No new items
- SRM&QA Assessment
- KSC Processing
- Verification/Certification - Status
- Mission Unique Assessment
- Readiness Statement
- Appendices
  - A: Minor Changes/Substitutions
  - B: SRM&QA
  - C: KSC Processing
  - D: Previously addressed material

Dick Rogers

Frank Ramsey
Ameen Sarkees
Dick Rogers

MARTIN MARIETTA
MANNED SPACE SYSTEMS

KSC Processing - Status

- **Discrepancy Reports (DRs)/Problem Reports (PRs) Review**
  - All PR/MRB discrepancies/dispositions similar to previously flown vehicles and are within existing database
  - All MRBs have been reviewed by MAF Reliability for potential SMRB
  - ALL MRBs on S1 & S6 are closed as of 12/17
- **Limited Life Component/ET Status**
  - All within required life through scheduled launch date plus 90 days except:
    - GUCP Pyro Cartridge Assembly: PD5000020, Lot AAD 2/93 3/93 c 11
    - Confined Detonating Fuse Assembly: 10315-002-XXX, Lot AAB
  - Shelf life extension of these items will be performed prior to launch

NATE WILL WORK

- **No OMRSD Exceptions/Waivers**

KSC Processing - Status

	STS-54/ET-51	STS-55/ET-56
• **Changes**		
- OMRSD	0	0
- ET modifications		
• Mod Kit	1 (*)	1 (*)
• DC&R (Discrepancy Check and Report)	2	2
• Bldg 45 (SPAR)	3 (**)	1
• FEC (Field Engineering Change)	0	1 (***)
• PSR (Project Special Request) SPAR	1 ~~GET APES LINE~~ BOLTING CHECK	1
- Software	0	0
• SIM Load	12/10/92	2/15/93
• SIM Launch	12/23/92	2/2/93

(*) Launch site TPS process enhancements - Previously discussed with "Changes"

(**) GO2 pressure line x-ray and removal/replacement - Previously discussed at Level II (11/3/92) - Included in "Appendix D", Previously discussed items

(***) Helium inject tube thermal wrap - Included in "Appendix A", Minor changes

MARTIN MARIETTA
MANNED SPACE SYSTEMS

Agenda

- Overview — Dick Rogers
- Mission Performance Summary — Frank Ramsey
  - STS-52/ET-55 (10/22/92)
  - STS-53/ET-49 (12/02/92)
- Mission Highlights — Ameen Sarkees
- ET Highlights — Ameen Sarkees
- Changes — Ameen Sarkees
- SMRBs: No new items — Ameen Sarkees
- SRM&QA Assessment — Ameen Sarkees
- KSC Processing — Ameen Sarkees
- Verification/Certification - Status — Dick Rogers
- Mission Unique Assessment — Dick Rogers
- Readiness Statement — Dick Rogers
- Appendices
  - A: Minor Changes/Substitutions
  - B: SRM&QA
  - C: KSC Processing
  - D: Previously addressed material

MARTIN MARIETTA
MANNED SPACE SYSTEMS

Verification/Certification - Status

Item	Status
• **NSTS 07700 Volume X Baseline** - Revision J, Change 188	No constraints
• **Certification documentation** - Hardware Certification Sheets (HCS) - Certificates of Qualification (COQ)	Complete - No issues
• **Waivers/Deviations** - One new item identified* - RSS enclosure vibration isolator criticality	No constraints

* Discussed on subsequent charts

MARTIN MARIETTA
MANNED SPACE SYSTEMS

CIL Waiver - RSS Enclosure Vibration Isolator

Issue

- Vibration isolators for RSS enclosure identified as Criticality 1

- CIL waiver approved at the 11/24/92 Daily PRCB (CRS040221F)
  - Limited effectivity: STS-53 (ET-49) and STS-54 (ET-51)
  - Subsequent ECP will formally process documentation update for remaining effectivities, ECD 12/24/92

Discussion

- Isolator failure mode not documented in FMEA/CIL

- ET performed dynamic analyses assuming any 1 of 6 isolators was failed
  - No issue with ET structure and remaining isolators
  - However, predicted vibration levels exceed GFP RSS component qualification levels

- SRB assigned Criticality 1 for RSS components within enclosure
  - Potential loss of destruct capability only
  - No inadvertent RSS operation
  - Delta qualification testing could potentially avoid Criticality 1 classification

MARTIN MARIETTA
MANNED SPACE SYSTEMS

CIL Waiver - RSS Enclosure Vibration Isolator

- Part: Standard part 54L6-2, quantity 6
- Function: Mechanical support for mounting ET RSS enclosure to Intertank
  Prevents flight induced vibration on RSS components in enclosure

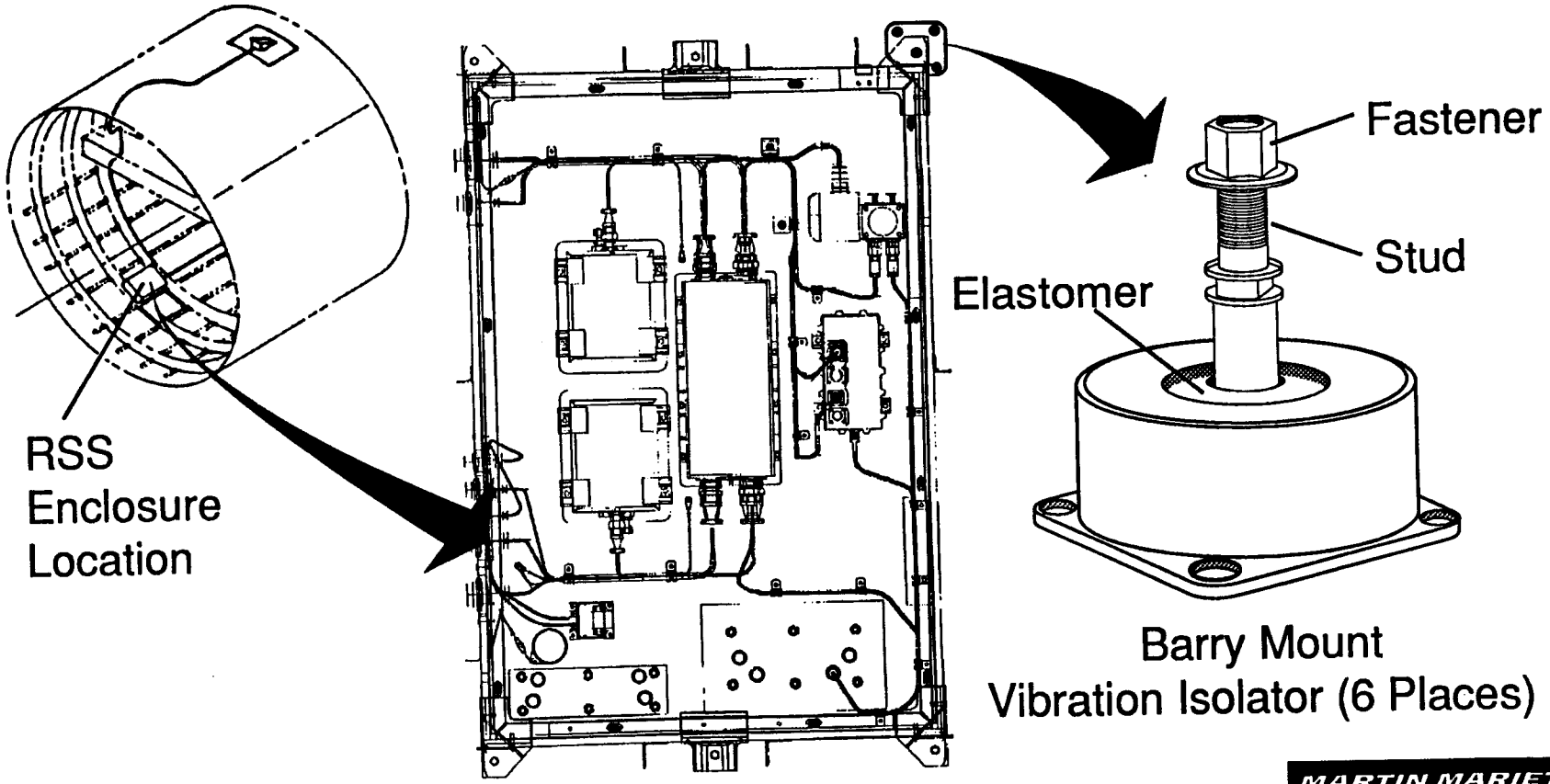

MARTIN MARIETTA
MANNED SPACE SYSTEMS

CIL Waiver - RSS Enclosure Vibration Isolator

Waiver Acceptance Rationale Summary

- Design
  - Isolators are made of long-life hi-damp silicone and are capable of 50 lb static load

- Qualification Testing
  - Isolators qualified with RSS enclosure (Ref COQ MMC-ET-TM06-95)

- Tests/Inspections
  - Vendor
    - Material selection and verification
    - Inspection for flatness of enclosure isolator mating surfaces
  - MAF
    - Isolator studs installation and torque
    - Co-planarity of enclosure/stud mating surfaces
    - Torque of enclosure fasteners
    - Enclosure inspection for damage

- Failure History
  - PRACA
    - There have been no reported failures on 54L6-2 vibration isolators
  - Flight experience
    - No known problems/failures for 51 missions

MARTIN MARIETTA
MANNED SPACE SYSTEMS

Mission Unique Assessment

Category/Item	STS-54/ET-51	STS-55/ET-56
• Vehicle loads	Complete - No issues	ECD 1/25/93
• Thermal assessment - Ascent - Intact abort and reentry	Complete - No issues	ECD 1/15/93
• Review of MRB actions using updated loads and environmental data	Complete - No issues	ECD 1/25/93
• MPS Preflight Prediction Package	ECD 1/4/93	ECD 2/12/93

MARTIN MARIETTA
MANNED SPACE SYSTEMS

Readiness Statement

The External Tank, ET-51, Is Hereby Certified and Ready for STS-54 Flight Pending Completion/Closure of Open and Planned Work

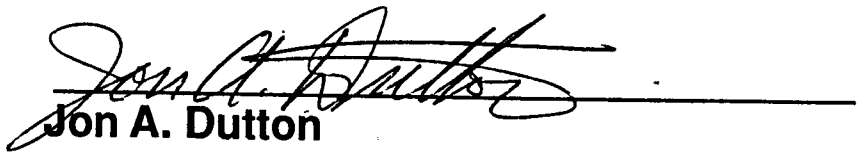

Jon A. Dutton
Vice President, External Tank Project
Martin Marietta Manned Space Systems

MARTIN MARIETTA
MANNED SPACE SYSTEMS

Readiness Statement

The External Tank, ET-56, Is Hereby Certified and Ready for STS-55 Flight Pending Completion/Closure of Open and Planned Work

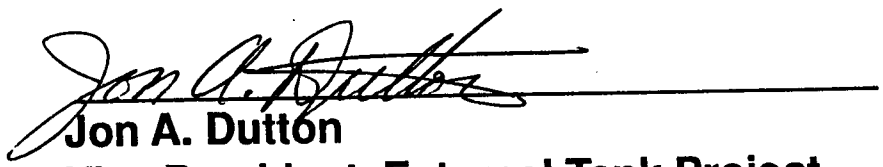

Jon A. Dutton
Vice President, External Tank Project
Martin Marietta Manned Space Systems

MARTIN MARIETTA
MANNED SPACE SYSTEMS

Appendices

- **A: Minor Changes**

- **B: SRM&QA Assessment**
  - MRB Assessment

- **C: KSC Processing**
  - Processing/Planned Work Schedules
  - PR/MRBs Summaries
  - Limited Life Components
  - KSC Component Replacement List
  - OMRSD Exceptions/Waivers
  - Modification Summary/Status
  - Software Verification/Validation Process

- **D: Previously reviewed material**
  - Changes
  - SMRBs
  - Waivers/Deviations

ET-54, 56 and Up - Nose Cone Fairing Cover (B01807D) A1

Background/Reason:

- Non-flight Nose Cone fairing cover used to prevent debris from entering the fairing opening during transportation/storage
- During first use of the Nose Cone fairing cover on ET-23 it was discovered that there was insufficient clearance (3/8") between the cover and the Checkout Cell platform at KSC
- Requirement added to remove the cover in the horizontal position prior to move to vertical position

Description:

- KSC modified Checkout Cell platforms to provide sufficient clearance (6.0") for the Nose Cone fairing cover
- Allows removal of Nose Cone fairing cover in the vertical position instead of in the horizontal position

Basis for Certification: Engineering analysis

MARTIN MARIETTA
MANNED SPACE SYSTEMS

ET-54, 56-59, Helium Inject Tube Thermal Wrap

FEC KET-0026

Background/Reason:

- Thermal wrap used on ET class II electrical harnesses and the helium inject line as protection from aeroheating
- ECP B01857 authorized replacement of MMS G120A asbestos thermal wrap for ET-61 and subs with MMS H135A fiberglass thermal wrap
- KSC Safety has disallowed asbestos thermal wrap for any future use at KSC

Description:

- Replace asbestos tape with fiberglass tape for ETs 54-59
  - Implemented via FEC/SPAR

Basis for Certification:

- Qualification test - Thermal
- Similarity

MARTIN MARIETTA
MANNED SPACE SYSTEMS

Class I/II JS DCN Changes

- Class I/II JS DCN changes that have been reviewed by MSFC S&E Resident Manager's Office
- All Class II STP/STM/Standards changes have been reviewed by MSFC M&P Lab
- These changes are acceptable for flight and summarized in this appendix (presentation not required)
  - Presentation criteria - Selection for presentation based on changes affecting:
    - Processes
    - Configuration
    - Material
    - Alternate Hardware
  - Presentation rejection criteria - All changes that do not affect configuration, material or processes
    - Revise Point of Incorporation
    - Drawing Clarification
    - Non-Flight Hardware Installation/Removal
    - Datum Changes
    - Update Usage/List of Materials (L/M)
    - Drawing Incorporation Errors
    - Manufacturing Aid
    - Drawing Errors
    - Fastener Type/Grip
    - Tolerance Change
    - Productivity
    - Minor changes taken care of by initial release of Class I Change (Same categories as above)

Class II and JS/DCN Changes - List

Electrical

Change No.	Description
B01726B-901	Delete hydrogen detector paper from GFP supplied list. MMMSS now supplies paper
H50001-636	Allows screw threads to protrude through SLA on underside of cable tray at 3 bond jumper locations due to tolerance stack-up
H50001-658	Provides for repair of strippable coating within the RSS box during fabrication/installation of wire harnesses. Strippable coating is later removed at KSC during RSS component installation

Class II and JS/DCN Changes - List

Propulsion

Change No.	Description
B01917D-907	Revise Propellant Feed Installation drawing to remove/replace the reallocated GFP LH2 umbilical disconnect
B01917F-908	Revise Propellant Feed Installation drawing to remove/replace the reallocated GFP LH2 umbilical disconnect
H50001-622	Replace washer with laminated shims and specify quantity of lockwire on the GO2/GH2 press. line guide rail installation
H50001-675	Provide acceptance criteria to permit raised or recessed metal no greater than 0.010" over the entire sealing surface of the LH2 siphon screen flange
H5001-686	Revise seal groove diameter tolerance for the LO2/LH2 feedline flange

Class II and JS/DCN Changes - List

Structures

Change No.	Description
H34809-581	Revised fastener lengths and corrosion protection instructions for aft ET/Orbiter crossbeam cable tray
-609	Revised dimensional tolerances on casting drawing for electrical umbilical cable tray fairing
-613	Added dimensional tolerances to press. line support machining drawing that were omitted during CAD data base load
H50001-604	Added minimum weld land width dimension to LH2 barrel no. 1 weld assembly drawing to clarify post weld inspection requirements
-623	Relocated vibro-etch part marking for completed LO2 dome weld assembly
-625	Deleted subassembly scribe line for locating radiographic templates on LO2 and LH2 dome caps

MARTIN MARIETTA
MANNED SPACE SYSTEMS

Class II and JS/DCN Changes - List

Structures

Change No.	Description
H50001-635	Improved flange protection requirement for LO2 dome cap suction fitting
-659	Relocated part marking on LO2 forward ogive fitting
-664	Revised geometric tolerances on tolerance control drawing to accommodate new tooling and measuring instruments
-665	Relocated part marking on after interface crossbeam
-669	Deleted redundant weld land mismatch requirement from LH2 forward dome gores
-678	Revise machined surface dimensions on LH2 longeron forging
-688	Revised Hi-lok grip length and added shim stocking requirements to LH2 internal frame installation drawing

Class II and JS/DCN Changes - List

Systems

Change No.	Description
H34809-615	Revised support equipment design specification to add calibrated standard weight to functionally check the digital indicator and load cell of the TPS Portable Bond Tension Tester, before and after TPS plug pull operations
-626	Cancel "ET Pack & Ship and Offiste Planned Work Complete" drawing. Pack and ship code information has since been added to individual control point pack and ship drawing

Class II and JS/DCN Changes - List

TPS

Change No.	Description
H34809-620	Add gap acceptance criteria between PAL ramps and adjacent cable trays (LO2, LH2 and SRB)
-621	Enhanced foam trims on LH2 forward dome by eliminating sidewall angles
H50001-667	Clarify reference dimension leader line - Was pointing to ablator surface and now points to metallic surface

MARTIN MARIETTA
MANNED SPACE SYSTEMS

STM/STP Changes - List

Change No.	STM/STP No.	Title
H34809-612	STM-K621	Added fineness of grind, toluene extract, and pH requirements and deleted density requirement for carbon black
H34809-618	STM-A854	Allowed two additional 3 month shelf life extensions past the initial 6 months shelf life provided material meets all other STM requirements
H34809-623	STP-7535	Deleted paragraph requiring classification of defects in composite parts located by NDE inspections
H50001-679	MMS-A659	Allowed substitution of Teflon sheet grades and types for use as TPS mold fabrication material
H50001-680	MMS-K406	Allowed storage temperature of zinc chromate paste to be between 40°F and 70°F
H50001-681	MMS-K308	Allowed storage temperature of wash primer to be 70 +/- 10°F
H50001-682	MMS-J317	Revision of material designation code numbers for SLA-561 vacuum bagging material because of discontinuation from vendor's inventory

Substitution

Authorization No.	Description
LWT-044-001	Asbestos tape thermal wrapped -Y ET/SRB cable harness (-130) replaced with fiberglass thermal wrapped cable harness (-150) • Removal/replacement required after harness failed 500 VDC isolation resistance test (MARS T124227) - Asbestos wrapped cable no longer used - Fiberglass wrapped cable harness implemented for ET-61 and subs

MRB Assessment

Assessment Criteria

- First assessment of all MRBs (Pre-51L FRR assessment/senior MRB second look)
  - Adequacy of technical dispositions
  - Completeness of required repair/retest
  - First time occurrences/SMRB criteria

- Second assessment of all MRBs
  - Adequacy of technical dispositions
  - Completeness of required repair/retest
  - Validity of MRBs with margin of safety impacts
  - Affects of MRBs on previous CIL inspections/tests

ET-51 Processing Schedule

C1

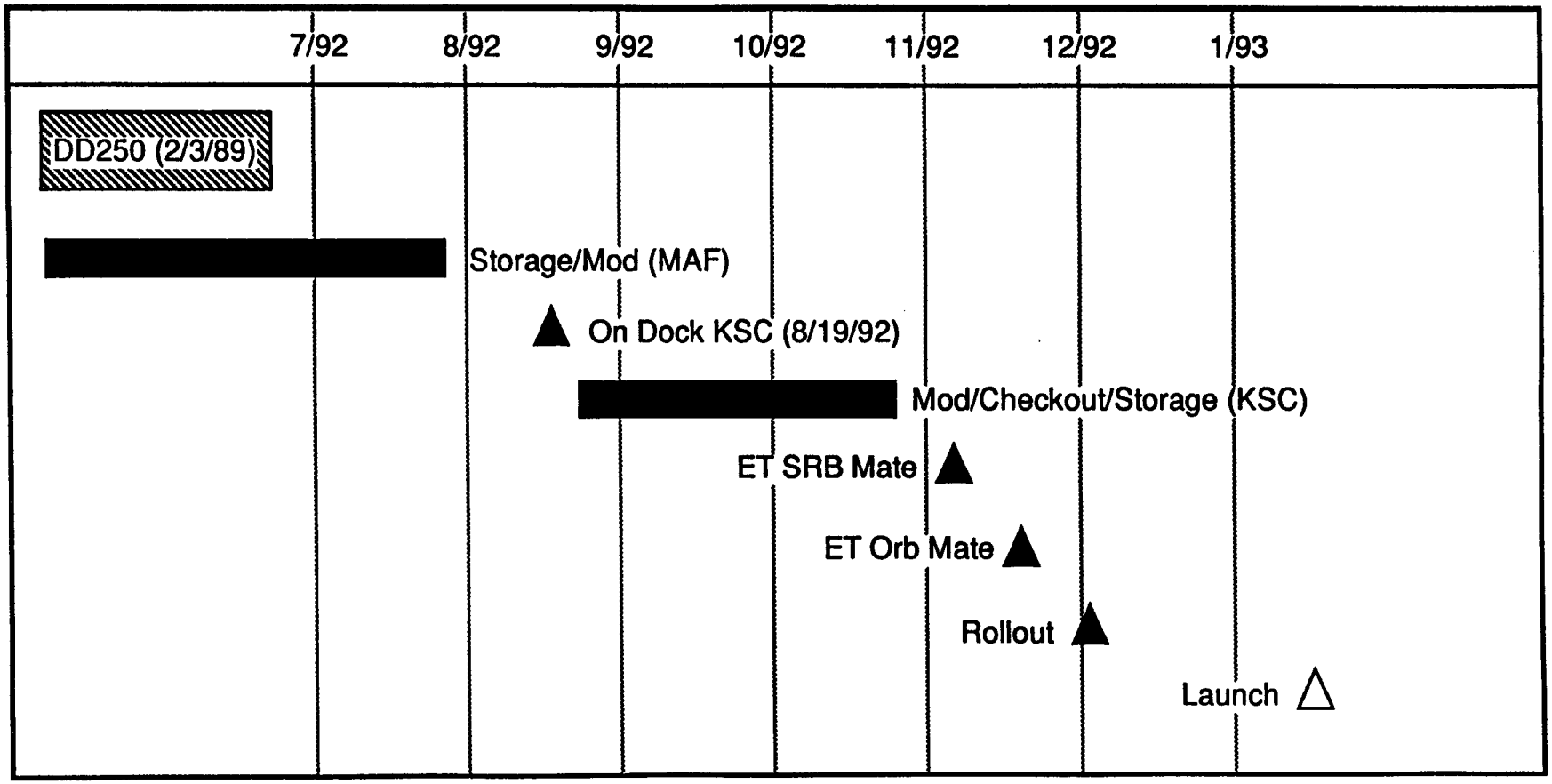

MARTIN MARIETTA
MANNED SPACE SYSTEMS

ET-51 Planned Work

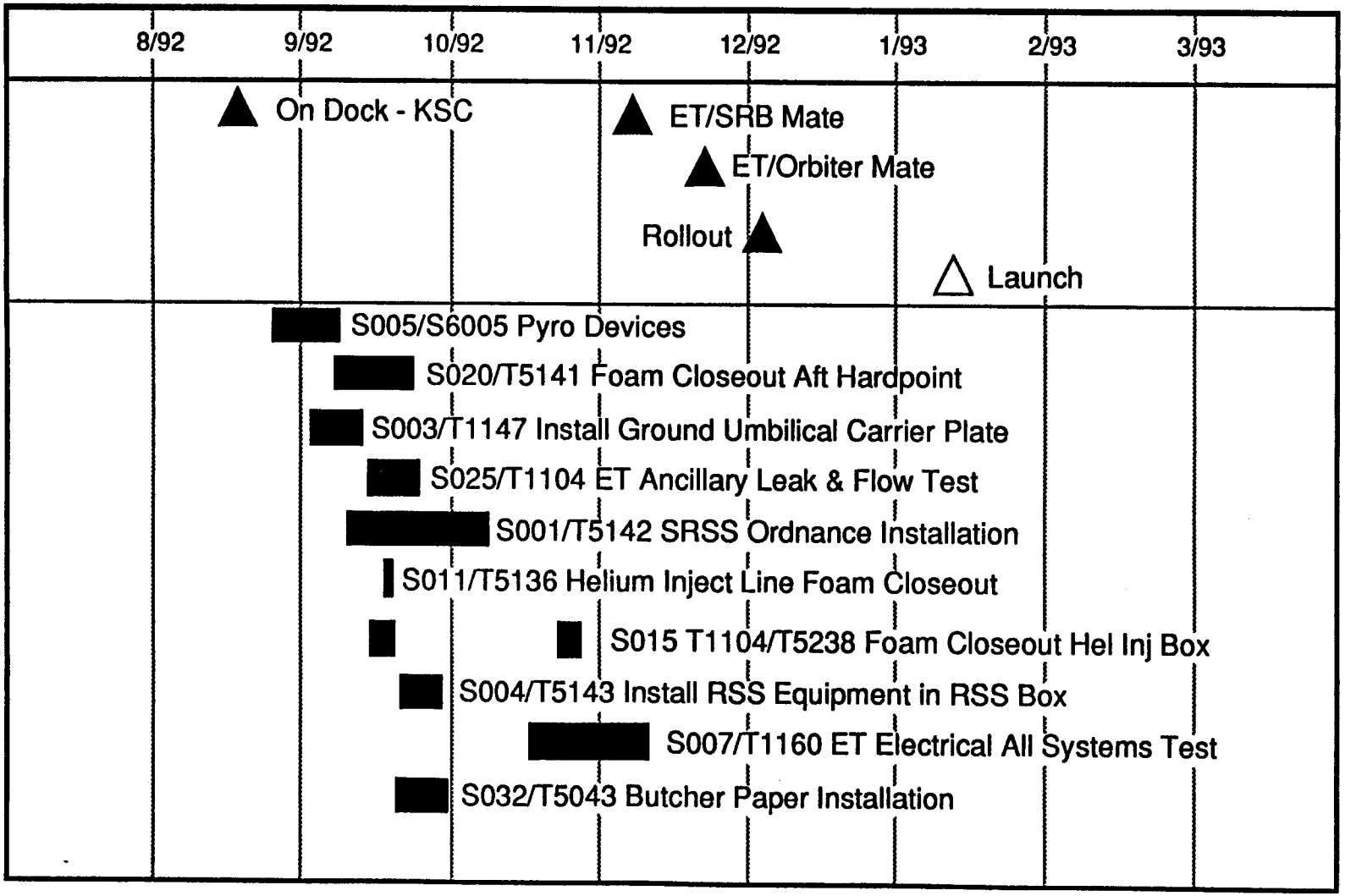

MARTIN MARIETTA
MANNED SPACE SYSTEMS

ET-51 Planned Work

C3

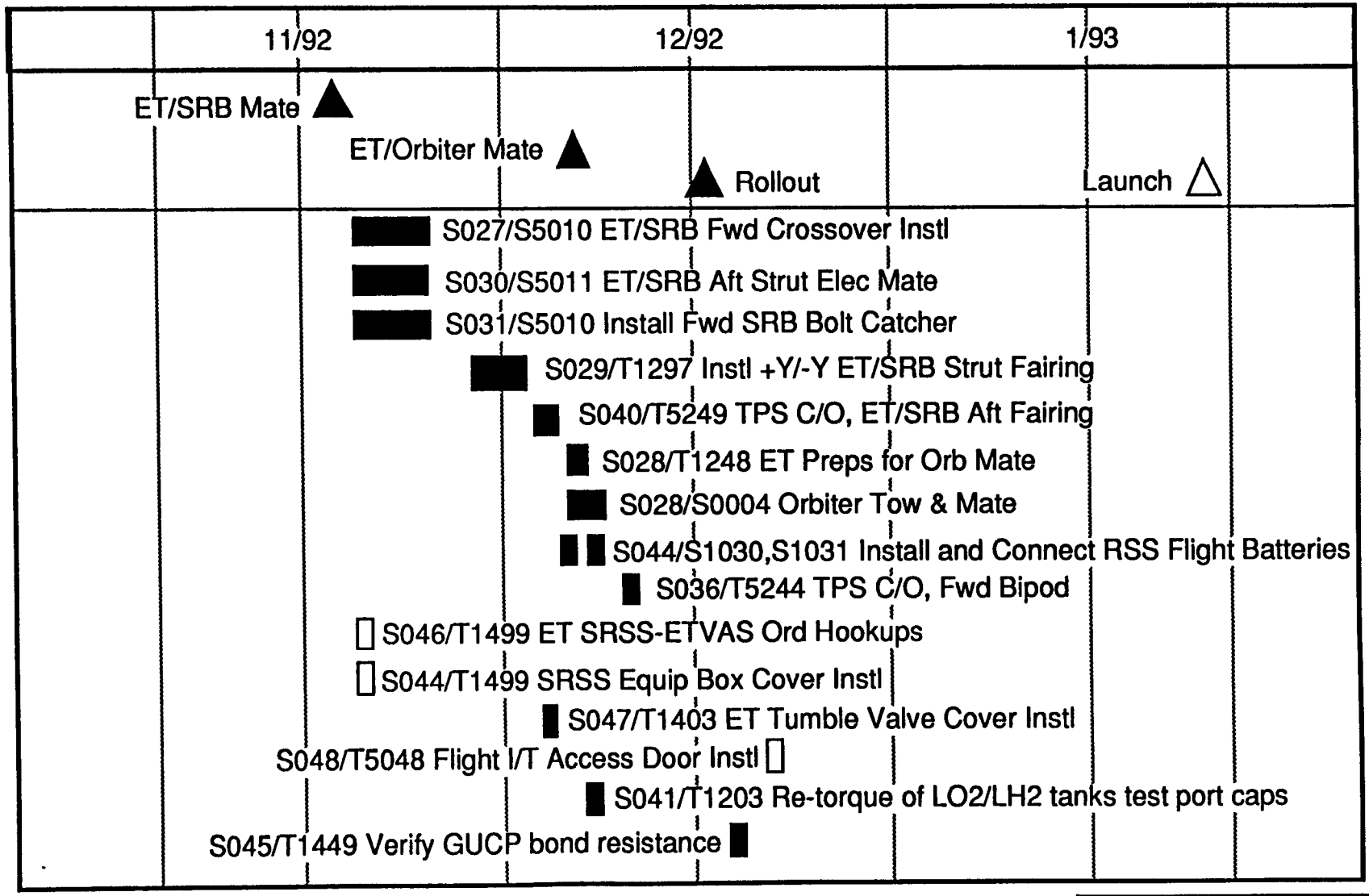

MARTIN MARIETTA
MANNED SPACE SYSTEMS

ET-51 DR/PR/OMRSD Waivers/Exceptions - Summary C4

as of 12/9/92

	Discrepancy	Problem	MRB Items		Waivers/ Exceptions	
Discipline	Total	Total	**Total**	**(Open)**	Total	(Open)
• Electrical	0	0	**0**	**(0)**	0	(0)
• Propulsion/Pneumatics	0	8	**3**	**(1)**	0	(0)
• Range Safety	0	0	**0**	**(0)**	0	(0)
• Structures	1	9	**1**	**(0)**	0	(0)
• Thermal (TPS)	1	31	**6**	**(0)**	0	(0)
Total	2	48	**10**	**(1)**	0	(0)

ET-51 PR/MRBs - Summary

Propulsion/Pneumatics

PR No./Status	Title/Description	Disposition
PET-51-FP-0004 Closed	LH2 4 in. disconnect - 2 bolts had low run-in torque	• Use as repaired • Safety wire bolts
PET-51-FP-0006 Closed	LO2 17 in. disconnect - 0.0 in. clearance exists between roller arm and cover. Should be 0.003 in. minimum	• Use as repaired • Area worked to Parker-Hannifin procedure
PET-51-FP-0008 Open	LO2 2 in. disconnect - 2 bolts had low run-in torque	• Use as repaired • Safety wire bolts

ET-51 PR/MRBs - Summary

Structures

PR No./Status	Title/Description	Disposition
PET-51-ST-0005 Closed	Cable tray joint cover gap of 0.010 in. (minimum) could not be maintained at Station 897 due to misalignment between cable tray segments	• Use as repaired • Slot existing holes 0.02 in. in joint cover • Use steel washers in place of aluminum washers

ET-51 Limited Life Components

Cycle Sensitive

Description	Part No.	Serial No.	Limit	Required	Remaining
LH2 Manhole Cover Assy	80914081488 -019	00000175	100	2	100
LO2 Mechanical Assy	80912002000 -019	00000044	100	1	100
LH2 Mechanical Assy	80914002000 -009	00000044	100	2	100
LO2 Manhole Cover Assy	80911001205 -010	00000134	100	1	100
LO2 Fwd Ogive Cover Plate	80911001207 -020	00000170	100	1	100
LH2 Manhole Cover Assy (Aft Dome)	80911001444 -010	00000295 00000296	100 100	2 2	100 100

ET-51 Limited Life Components

Age Sensitive

Description	Part No.	Serial No.	Limit	Initiation	Expiration
External Tank	80901000000 -259	00000044	6 Years	2/89	2/95
RSS Battery A	10406-0133 -801	2000098 2000099	2 Years 90 Days	12/11/91 11/19/92	12/11/93 2/17/93
RSS Battery B	10406-0133 -801	---	2 Years 90 Days	11/19/92 12/11/91	2/17/92 12/11/93
Tumble Valve Nozzle Flight Cover	PD4700193 -004	0000714	*5 Years **180 days	5/8/90 11/18/92	5/8/95 5/17/93

* Shelf Life

** Operating Life

ET-51 Limited Life Components

Age Sensitive Pyrotechnics - 10 Years Life/Requires Lot Verification Tests After 4 and 7 Years

Description	Part No.	Lot No.	Serial No.	Latest Retest	Expiration
Confined Detonating Fuse	10315-0002 -825	AAB	278	4/90	7-Yr, 3/93
	-826	AAB	235	4/90	7-Yr, 3/93
	-827	AAB	191	4/90	7-Yr, 3/93
	-828	AAB	147	4/90	7-Yr, 3/93
	-829	AAB	325	4/90	7-Yr, 3/93
	-830	AAB	369	4/90	7-Yr, 3/93
	-831	AAB	418	4/90	7-Yr, 3/93
Confined Detonating Fuse Manifold	10312-0002-803	AAT	2002101	3/90	4-Yr, 3/95*
		AAT	2002103	3/90	4-Yr, 3/95*
Safe & Arm Device	10311-0001-803	AAF	1000379	11/91	4-Yr, 1/95
NSD	SEB26100094	JEH	0000085	10/90	4-Yr, 10/94
	-201	JEH	0000427	10/90	4-Yr, 10/94

* Oldest sub-assy mfg date of 3/89

ET-51 Limited Life Components

Age Sensitive Pyrotechnics - 10 Years Life/Requires Lot Verification Tests After 4 and 7 Years

Description	Part No.	Lot No.	Serial No.	Latest Retest	Expiration
Separator Assy GUCP	PD5000020 -059	AAD	0001108	2/89	4-Yr, 2/93
Cartridge Assy	PD5000020 -030	AAD	11186	2/89	4-Yr, 2/93
		AAD	11187	2/89	4-Yr, 2/93
Linear Shaped Charge	PD500016 -050	AAJ	0001556	2/91	4-Yr, 4/94

ET-51 KSC Component Replacement List

Part Name	Part Number	Serial Number Removed	Serial Number Installed	Authority
RSS CDF manifold	10312-0002-803	0000941 0000944	2002101 2002103	Bldg 45/H0595B
GO2 press. line	PD4800180-069	0001259	0001036	Bldg 45/H0628

ET-51 Changes, Modification Summary

No.	Description	Status
Bldg 45		
H0595B	RSS CDF manifold (2) remove and replacement	**Closed**
H0627	Remove/reinstall nose cone fairing to x-ray GO2 press. line bellows	**Closed**
H0628	Remove and replace forward GO2 press. line/bellows	**Closed**
DC&Rs		
E-90-001	Inspect for adhesive staking	**Closed**
S-91-007	Inspect forward ET/SRB fitting inserts	**Closed**
Mod Kit		
E113	Launch Site Process Enhancements	**Closed**
PSR		
PSR-TL-001	ET LSC Electrical Bond Measurement	**Closed**

ET-56 Processing Schedule

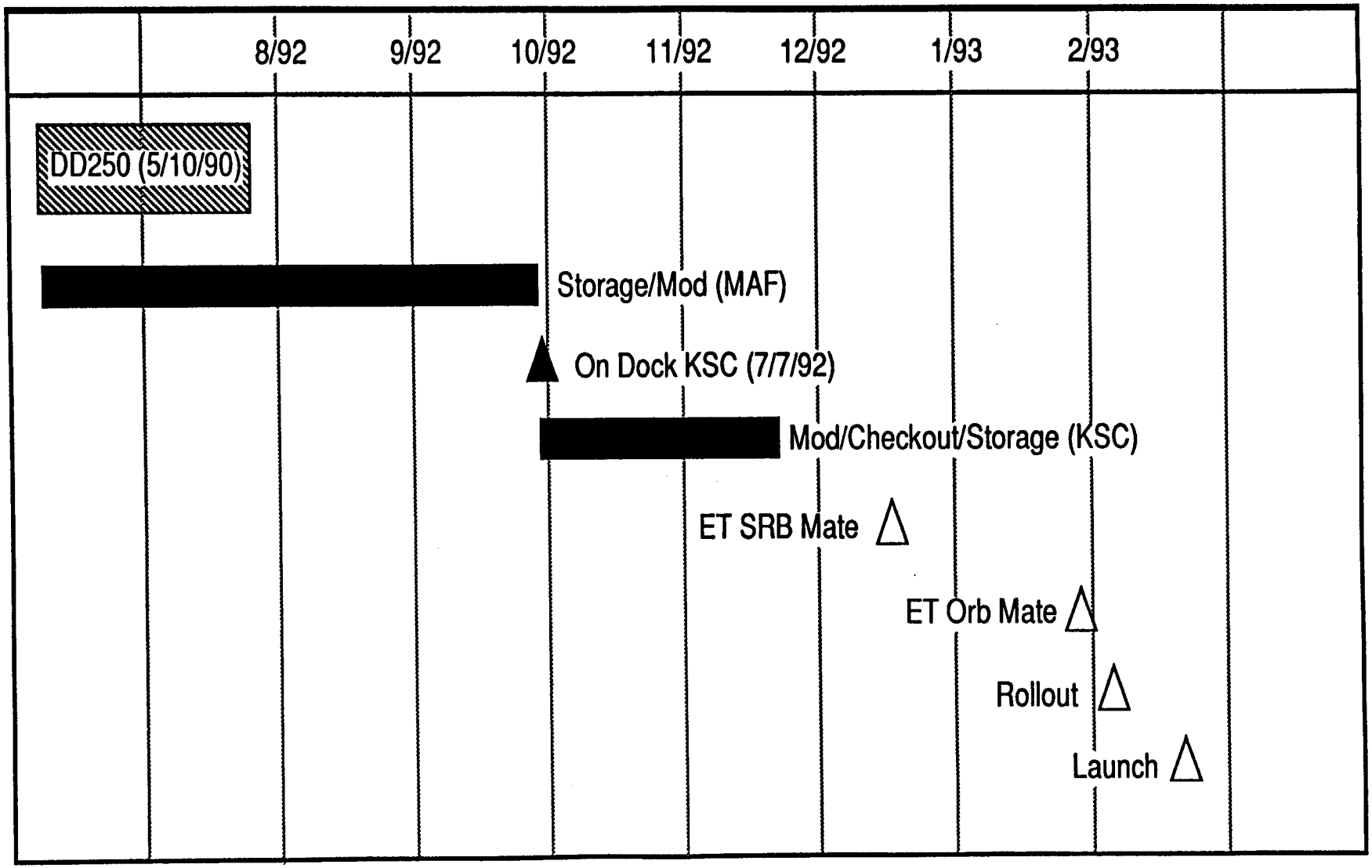

MARTIN MARIETTA
MANNED SPACE SYSTEMS

ET-56 Planned Work

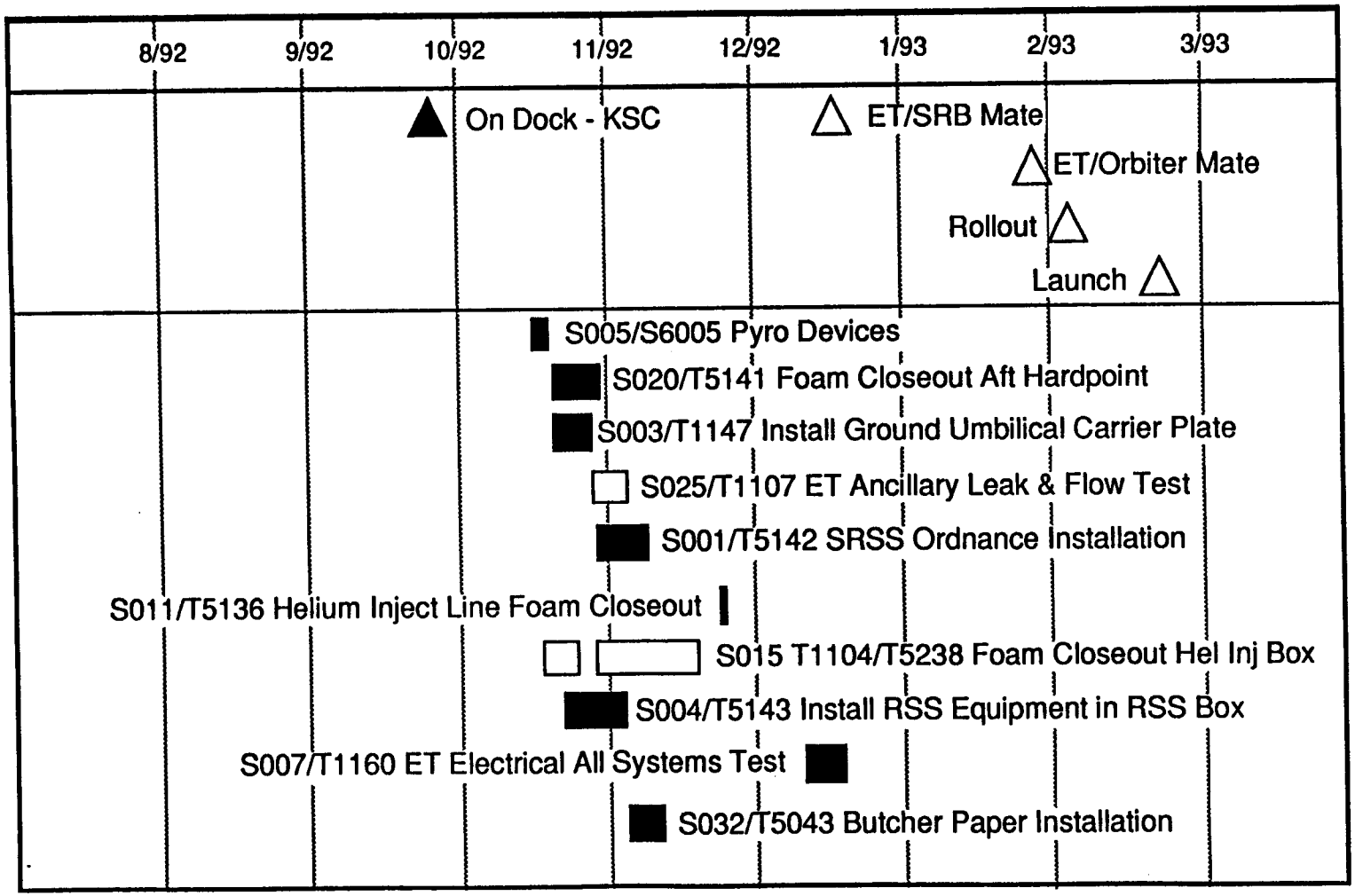

MARTIN MARIETTA
MANNED SPACE SYSTEMS

ET-56 Planned Work

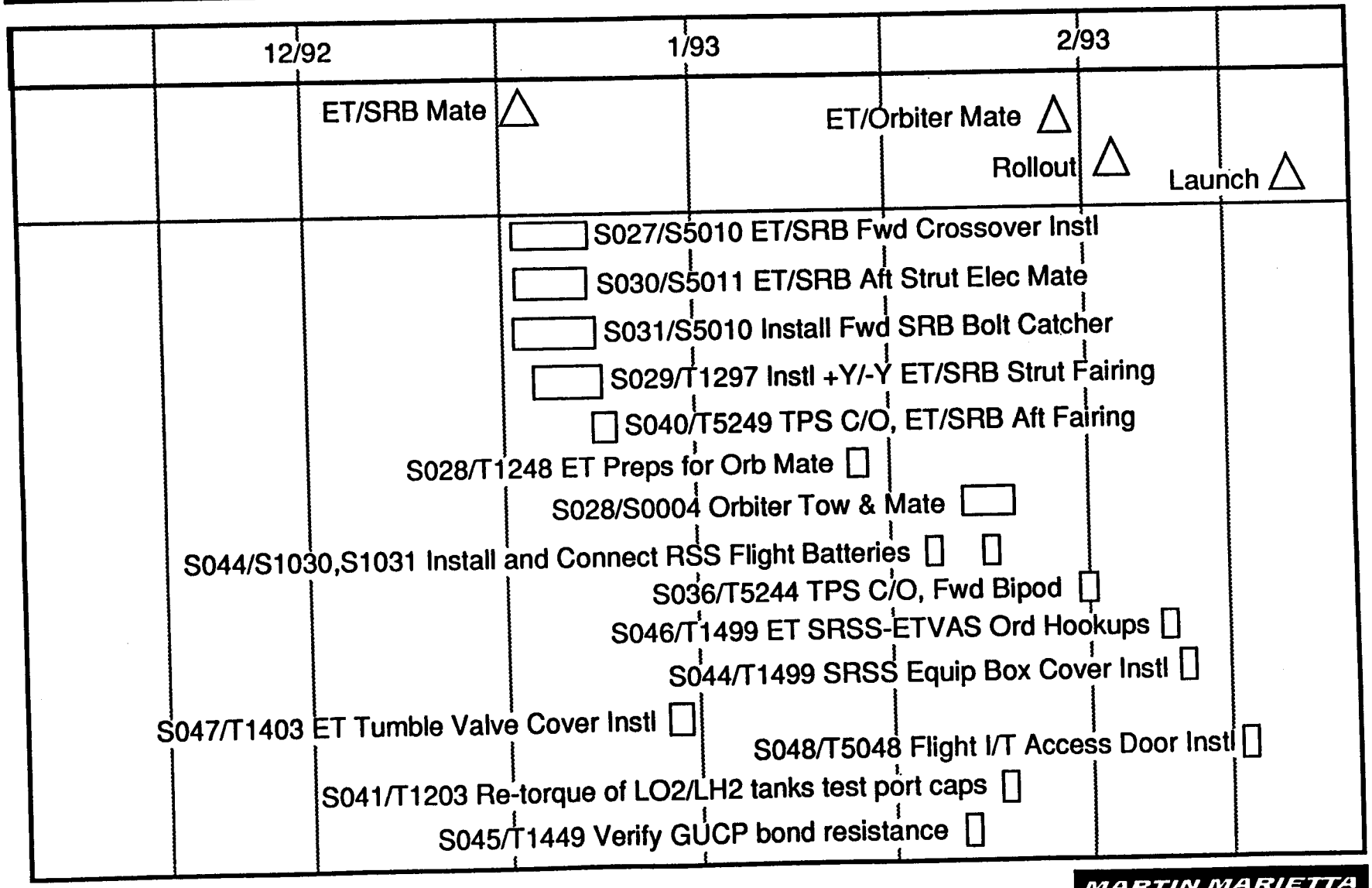

MARTIN MARIETTA
MANNED SPACE SYSTEMS

ET-56 DR/PR/OMRSD Waivers/Exceptions - Summary C18

as of 12/9/92

Discipline	Discrepancy Total	Problem Total	MRB Items Total	MRB Items (Open)	Waivers/ Exceptions Total	Waivers/ Exceptions (Open)
• Electrical	0	0	**0**	**(0)**	0	(0)
• Propulsion/Pneumatics	0	8	**2**	**(1)**	0	(0)
• Range Safety	0	0	**0**	**(0)**	0	(0)
• Structures	1	8	**1**	**(0)**	0	(0)
• Thermal (TPS)	0	6	**1**	**(1)**	0	(0)
Total	1	22	**4**	**(2)**	0	(0)

MARTIN MARIETTA
MANNED SPACE SYSTEMS

ET-56 PR/MRBs - Summary

Propulsion/Pneumatics

PR No./Status	Title/Description	Disposition
PET-56-FP-0006 Open	LH2 4 in. disconnect - One bolt has low run-in torque	• Use as repaired • Bolt is safety wired to adjacent bolt
PET-56-FP-0007 Closed	Helium inject line - Heat shrink tubing used in helium inject line TPS closeout at LO2 feedline is split. Tubing was re-paired by wrapping with (2) layers of J463A Kapton tape	• Use as repaired • Kapton tape will perform same function as heat shrink tubing securing the thermal tape and metal braid in place prior to TPS closeout

ET-56 PR/MRBs - Summary

Structures

PR No./Status	Title/Description	Disposition
PET-56-ST-0002 Closed	Raised metal on the EB-1 and EB-2 bearing surface - Raised metal was removed and dye penetrant inspection performed, no finish re-applied to bare metal	• Use as repaired • Bare metal areas are outside of critical bearing surface

ET-56 PR/MRBs - Summary

Thermal (TPS)

PR No./Status	Title/Description	Disposition
PET-56-TS-0001 Closed	Aft hardpoint closeout - Lead-out test panel failed tensile strength test • Actual: 32.5 psi • Should be: 35 psi (minimum)	• Use as is • Additional tensile strength tests and density test was performed on closeout and were acceptable
PET-56-TS-0006 Open	LH2 4 in. recirculation line - SLA at umbilical end below required thickness • Actual: 0.21 in. • Should be: 0.27 in. +/- 0.02 in.	• Use as is • Sufficient SLA remains to protect against aero heating • Factor of safety was 1.78, now 1.58 • Area closeout with BX250

ET-56 Limited Life Components

Cycle Sensitive

Description	Part No.	Serial No.	Limit	Required	Remaining
LH2 Manhole Cover Assy	80914081488 -019	00000179	100	2	100
LO2 Mechanical Assy	80912002000 -019	00000049	100	1	100
LH2 Mechanical Assy	80914002000 -009	00000049	100	2	100
LO2 Manhole Cover Assy	80911001205 -010	00000139	100	1	100
LO2 Fwd Ogive Cover Plate	80911001207 -020	00000175	100	1	100
LH2 Manhole Cover Assy (Aft Dome)	80911001444 -010	00000303 00000304	100 100	2 2	100 100

MARTIN MARIETTA
MANNED SPACE SYSTEMS

ET-56 Limited Life Components

Age Sensitive

Description	Part No.	Serial No.	Limit	Initiation	Expiration
External Tank	80901000000 -230	00000049	6 Years	5/90	5/96
RSS Battery A	10406-0133 -801	---	2 Years 90 Days	--- ---	--- ---
RSS Battery B	10406-0133 -801	---	2 Years 90 Days	--- ---	--- ---
Tumble Valve Nozzle Flight Cover	PD4700193 -004	---	*5 Years **180 days	--- ---	--- ---

ET-56 Limited Life Components

Age Sensitive Pyrotechnics - 10 Years Life/Requires Lot Verification Tests After 4 and 7 Years

Description	Part No.	Lot No.	Serial No.	Latest Retest	Expiration
Confined Detonating Fuse	10315-0002 -825	AAB	287	4/90	7-Yr, 3/93**
	-826	AAB	243	4/90	7-Yr, 3/93**
	-827	AAB	199	4/90	7-Yr, 3/93**
	-828	AAB	147	4/90	7-Yr, 3/93**
	-829	AAB	154	4/90	7-Yr, 3/93**
	-830	AAB	333	4/90	7-Yr, 3/93**
	-831	AAB	423	4/90	7-Yr, 3/93**
Confined Detonating Fuse Manifold	10312-0002-803	AAT	2002104	4/92	7-Yr, 3/95*
		AAT	2002107	4/92	7-Yr, 3/95*
Safe & Arm Device	10311-0001-803	AAF	10000315	11/91	1/95***
NSD	SEB26100094	JEJ	0000249	10/90	4-Yr, 10/94
	-201	JEJ	0000273	10/90	4-Yr, 10/94

* Oldest sub-assy mfg date of 3/89

** Oldest sub-assy mfg date of 3/86

*** Oldest sub-assy mfg date of 1/85

ET-56 Limited Life Components

Age Sensitive Pyrotechnics - 10 Years Life/Requires Lot Verification Tests After 4 and 7 Years

Description	Part No.	Lot No.	Serial No.	Latest Retest	Expiration
Separator Assy GUCP	PD5000020 -059	AAD	0001110	2/89	4-Yr, 2/93
Cartridge Assy	PD5000020 -030	AAD	11191	2/89	4-Yr, 2/93
		AAD	11192	2/89	4-Yr, 2/93
Linear Shaped Charge	PD500016 -050	AAJ	0001557	2/91	4-Yr, 4/94*

* Oldest sub assy mfg date of 4/90

KSC Component Replacement List

Part Name	Part Number	Serial Number Removed	Serial Number Installed	Authority
CDF Manifold	10312-0002-803	0000618 0000617	2002107 2002104	ET-56-RSS-001/ H0595B

ET-56 Changes, Modification Summary

No.	Description	Status
Mod Kits		
E115/B01972	Launch site process enhancements	Work Complete
DC&Rs		
E-90-001	Inspect for adhesive staking of RF shorting caps on RSS antenna/GUCP	Work Complete
S-91-007	Inspect forward ET/SRB fitting inserts	**Closed**
PSR		
PSR-TL-001	ET LSC electrical bond measurement	Work Complete
Bldg. 45		
H0595B	CDF Manifold (2) remove and replace	Work Complete
FEC		
KET-0026	Revise He Inject Line Closeout to use MMSH135A Fiberglass Tape instead of MMSG120A Thermal Exhaust Tape	**Closed**

KSC Software Revision Verification/Validation Process C28

- Software changes identified and approved by Technical Review Panel (TRP)

- Code changed and de-bugged against propellant loading model
  - Desk top review performed by MMC Software/Project Engineer

- Software Verification Procedures (SVP) revised by System Engineers

- Software Verification Process
  - Desk top review performed by SPC Quality Engineer
  - Automated "was/is" program listing produced and verified
  - Revised software loaded into simulation firing room
  - Software Verification Procedures (SVPs) performed to test changed code against propellant loading model*

*LO2/LH2 Main Propulsion System Models
- High fidelity
- Reflects system dynamics
- Provides simulation for:
  - Application software
  - De-bug/verification
  - Engineering training
  - Propellant loading

MARTIN MARIETTA
MANNED SPACE SYSTEMS

KSC Software Revision Verification/Validation Process C29

- Revised software
  - Used for
    - S0044, Simulated launch
    - S0056, Simulated load (Shuttle Propellant Load Countdown Simulation)
      - LO2/LH2 software all executing concurrently
      - Nominal and contingency operations simulated
      - Provides end-to-end software verification
  - Loaded into operational firing room for hardware use

Note: Unless indicated, both SPC and MMC/LSS personnel are involved in all operations

MARTIN MARIETTA
MANNED SPACE SYSTEMS

ET-56 and Up, AADS Test Requirements (B01643H)

D1

Description

Revised test requirement for leakage of AADS total pressure sensor and sense lines

- Was:
  - Apply vacuum
  - Leakage shall be less than 0.24 psig over a period of 5 minutes
  - Sensor output voltage shall not **decrease** by more than 0.08 VDC
- Now:
  - Apply vacuum
  - Leakage shall be less than 0.24 psig over a period of 5 minutes
  - Sensor output voltage shall not **increase** by more than 0.08 VDC

Reason

Incompatibility between acceptance requirements and test procedure

Basis for Certification

Documentation only - Existing test method is correct

MARTIN MARIETTA
MANNED SPACE SYSTEMS

ET-56 and Up, Intertank Structure Assembly (B80120AH)$_{D2}$

Background/Reason:

Productivity - Enhance assembly process of intertank structure

- Tool used to drill/install intertank panel to frame and buttstrap fastener on intertank half sections

Description:

Incorporate automatic vertical riveter for intertank assembly

- Replace manual rivet installation with automated numerically controlled rivet installation system
- Replace hi-lok fasteners with hi-set rivets
- Revised engineering to resequence rivet stiffener installation operation
- Developed numerically controlled part programs

Basis for Certification:

- Test verification of all software programs
- System validation with pathfinder test articles
- Validation of production part program ET-56
- Hi-set rivets previously certified on intertank assembly operations
- Stress analysis - FS unaffected

MARTIN MARIETTA
MANNED SPACE SYSTEMS

ET-56 and Up, Intertank Structure Assembly (B80120AH)D3

Prior Configuration

- Manual application of hi-lok fasteners

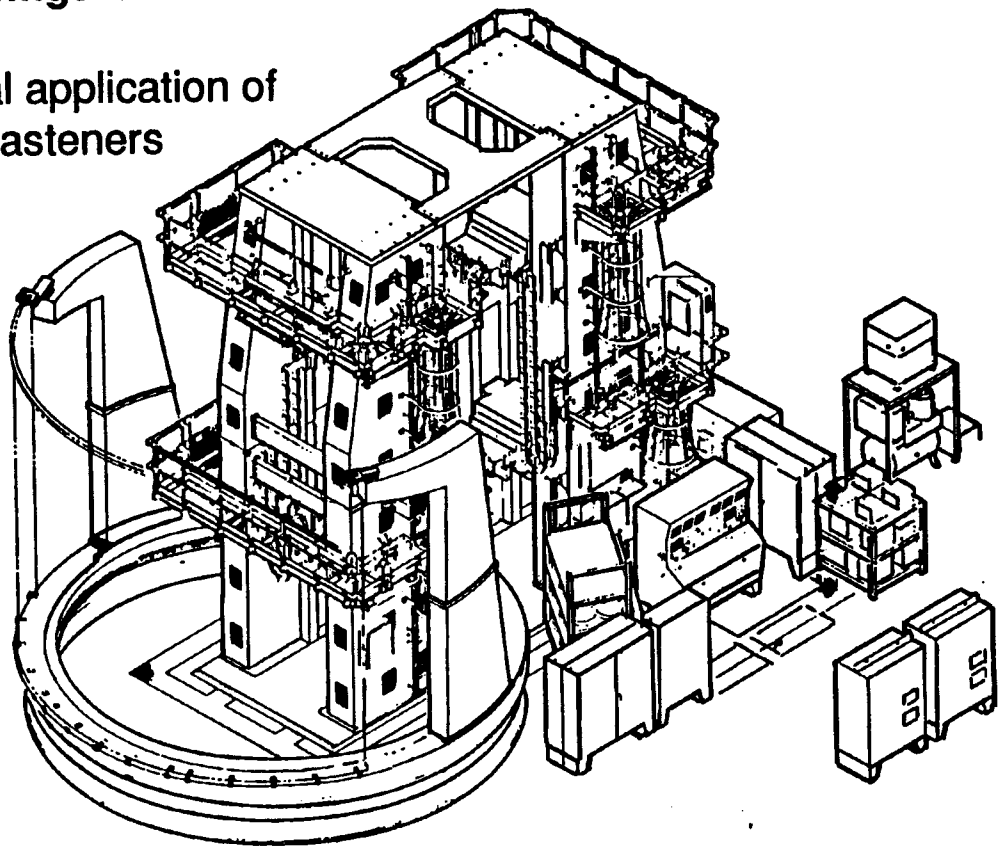

ET-56 and Up

- Added computerized numerically controlled vertical rivet assembly tool
- Automatic drill/rivet installation
- Replace hi-lok fasteners with hi-set rivets
- Revised intertank assembly sequence

MARTIN MARIETTA
MANNED SPACE SYSTEMS

ET-56 SMRBs - Summary

Description	Disposition/Vehicle Clearance
• 0.050" Gas hole in GH2 pressure line mid fixed assembly longitudinal weld (T097992) - Detected during post 51L x-ray re-evaluation - 21-6-9 stainless steel	• Use as is based on fracture mechanics analysis - Infinite missions to leak/burst
• 0.090" porosity in LH2 feedline internal circumferential weld (T093884) - Detected during post 51L x-ray re-evaluation - 2219-T62 Al	• Use as is based on fracture mechanics analysis - Infinite missions to leak/burst

MARTIN MARIETTA
MANNED SPACE SYSTEMS

ET-56 SMRB - GH2 Press. Line Defect (T97992)

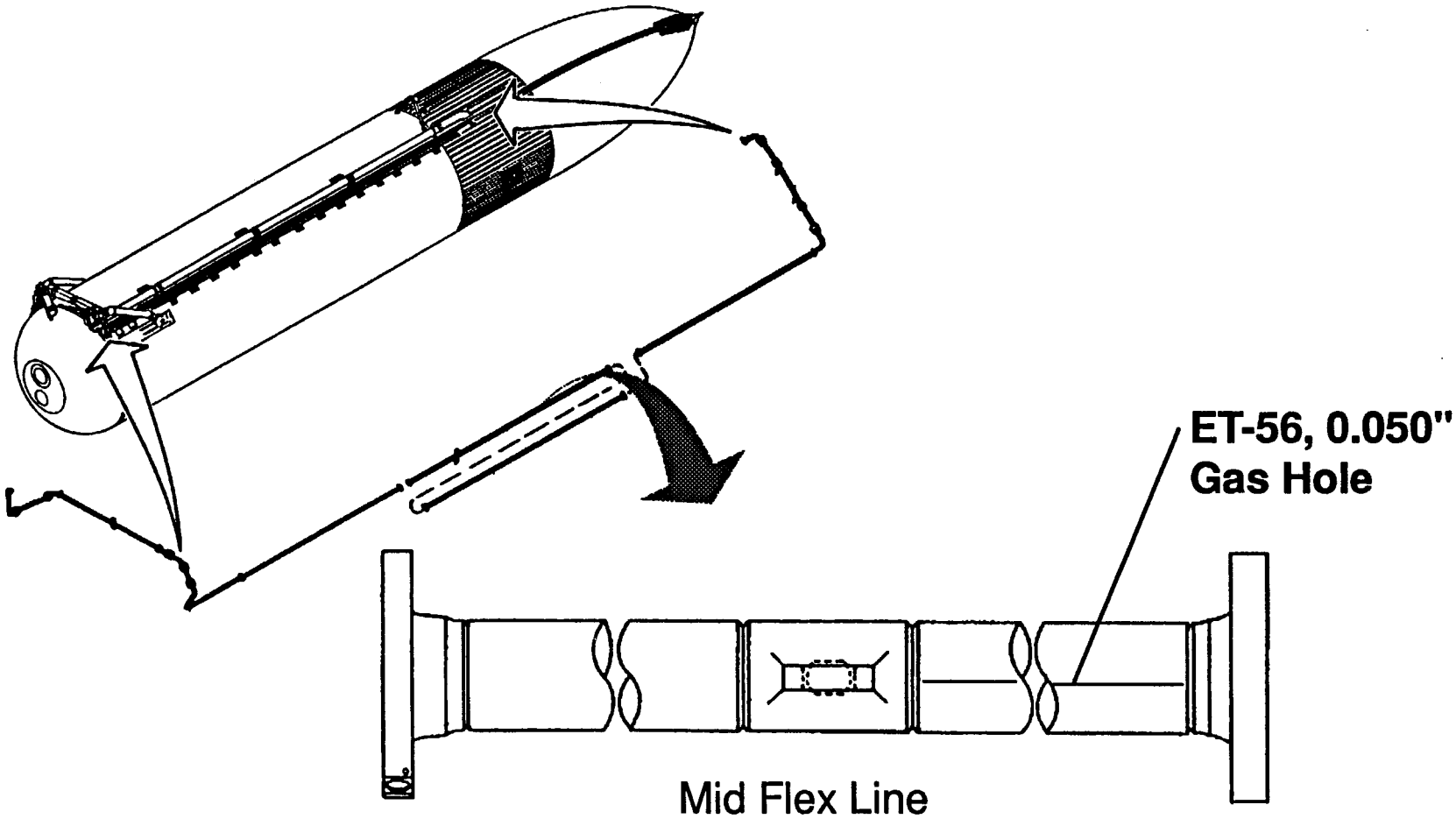

MARTIN MARIETTA
MANNED SPACE SYSTEMS

ET-56 SMRB - LH2 Feedline Defect (T93884)

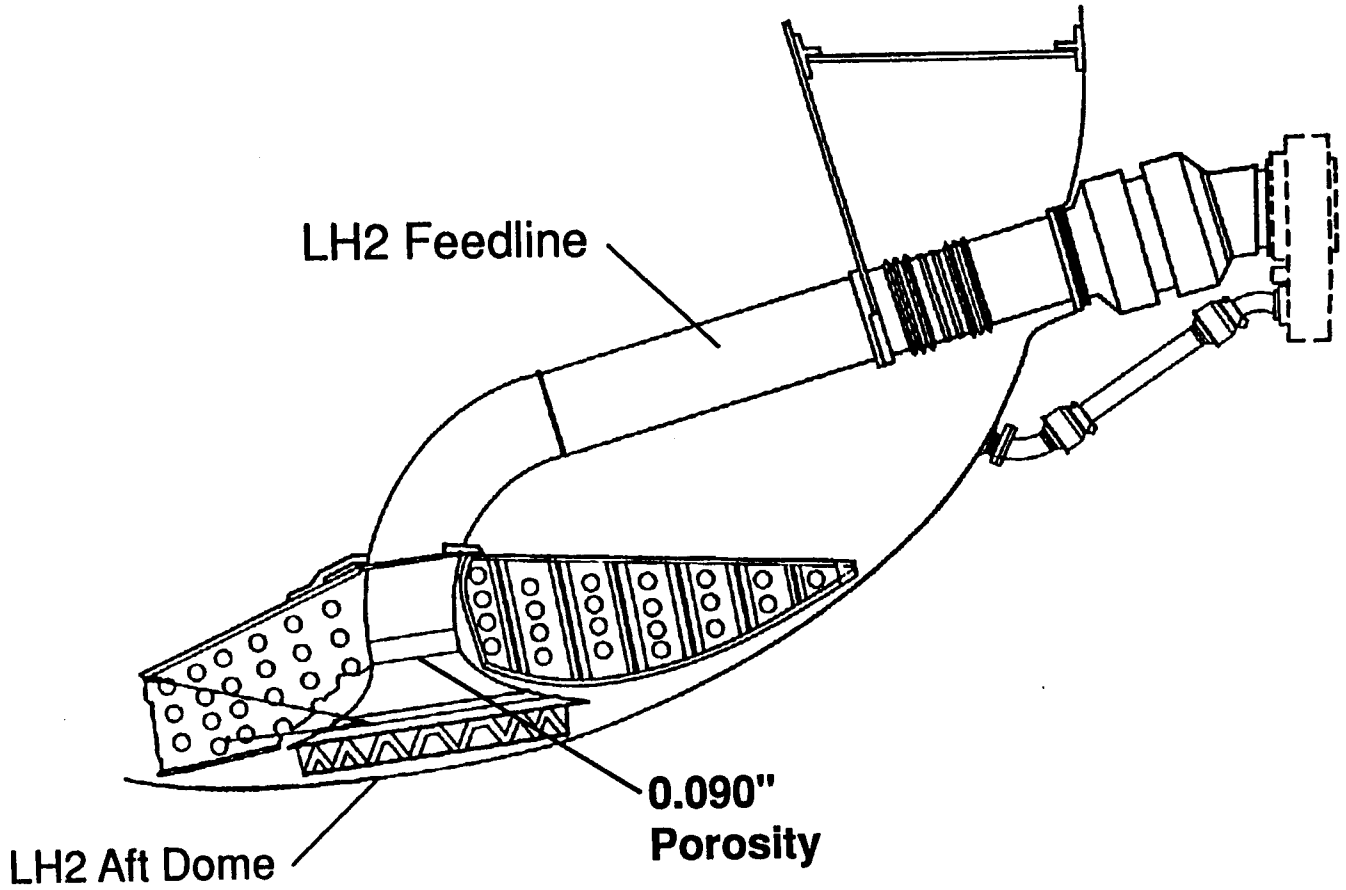

MARTIN MARIETTA
MANNED SPACE SYSTEMS

ET-56 SMRB, LH2 Barrel Contour Deviation (T100315) D7

Problem: Post proof LH2 barrel had dent/gouge

Background: Occurred while installing tooling roll ring segment to LH2 tank

Cause: Inadequate tooling/handling procedure

Disposition:
- Smooth and blend scratch
- Restore contour using "body fender tool"
- Perform penetrant and x-ray inspection

Vehicle Clearance:
- Minimum drawing thickness not violated
- Contour returned to drawing requirements
- Penetrant and x-ray inspections acceptable
- Strain due to impact and repair was only 10% of failure strain
- Stress analysis - Minimum FS = 1.47, unchanged

MARTIN MARIETTA
MANNED SPACE SYSTEMS

Level II Waivers, Baseline

Document/Requirement	Para	Waiver No.	Effectivity
Space Shuttle Flight and Ground System Specification (NSTS 07700 Vol. X)			
• Electrical Bonding (MIL-B-5087)	3.6.14	378	ETs 23, 27-29 & 31-999
• Soldering (NSTS 08800)	3.6.15.1.1	379	
• Circuit Boards	3.6.15.2.1	382, 383	
• Design Criteria & STDs (JSCM 8080--20C &4B)	3.6.19	362	
• CIL Fail Safe & Redundancy Requirements	3.5.1.1.1 3.5.1.1.2 3.5.1.1.3	401	ETs 23, 27-29 & 31-999 (Variable, by item #)

MARTIN MARIETTA
MANNED SPACE SYSTEMS

Level II Waivers, Baseline

Document/Requirement	Para	Waiver No.	Effectivity
Space Shuttle Flight and Ground System Specification (NSTS 07700 Vol. X)			
• Lightning Protection and Shielding (NSTS 07636)	3.6.21	10, 11	ETs 23, 27-29, 31-999 (NSTS 07636, Rev F Changed Waivers to Exceptions)
• Lightning Protection & Verification (NSTS 07636)	3.6.21	S41383L	
• Range Safety System	3.5.4.1.12	388	ETs 23, 27-29, 31-999

MARTIN MARIETTA
MANNED SPACE SYSTEMS

Level II Waivers, Baseline

Document/Requirement	Para	Waiver No.	Effectivity
Pyrotechnics (NSTS 08060)			
• Use connector 40M36298	3.4.1	061	ETs 23, 27-29 & 31-999
• Epoxy to separate metals on LSCs	3.5.8	062	
• Resistance check not required	7.3	063	
• Not required to meet voltage break down required	8.2.1	064	
• Route fire circuit wiring separately	8.2.3	065	
EMC (SL-E-0001), Wire marking not applicable to ET	3.2.5	003	
EMC (SL-E-0002), GUCA Leg Factor of Safety	3.2.2.2.2	021	
NSTS 07700 Vol V, NSTS Information Management Requirements - EEE Listing, Limited Life Status Pressure Vessel Historical Data	Tables C-5, C-6, C-13	005, 007, 009	

MARTIN MARIETTA
MANNED SPACE SYSTEMS

Level II Waivers, Baseline

Document/Requirement	Para	Waiver No.	Effectivity
NSTS 07700 -10- MVP 01 Shuttle Master Verification Plan - Acceptance Criteria and GH2 Vent Valve Certification	3.7.1	013	ETs 23, 27-29 & 31-999
NSTS 08060, Space Shuttle System Pyrotechnic Specification - Design Pyrotechnic for Reliability No Redundant Tumble Valve	3.1	060	
NSTS 08123, Certification of Flexible Hoses & Bellows - LH2 Feedline Bellows	1.2	003 002 (retired)	ETs 42-45 & 47-999 ETs 23, 27-29, 31-41, & 46

MARTIN MARIETTA
MANNED SPACE SYSTEMS

Level III Deviations, Baseline

Document/Requirement	Para	DAR No.	Effectivity
External Tank End Item Spec			
• Four GH2 pressurization line assemblies require NDE after proof because of an increase in the design loads. Current certification is based on the pre-proof test NDE	Table 3.2.3	177	ETs 33-35, 37, 39-60
• Cleaning requirement specifies a maximum of 1000 microns in any direction without restrictions to number of particles - Kapton insulated wire in the LH2 tank has potential to emanate fiber-like Telfon particles above the contamination requirements. Cryogenic flow test show contamination is negligible	3.3.10	179	

MARTIN MARIETTA
MANNED SPACE SYSTEMS

Level III Deviations, Baseline

Document/Requirement	Para	DAR No.	Effectivity
ICD-2-12001 - LH2 feedline flange dimension violates ICD requirements • Inside diameter - Reqmt = 16.875± 0.010" - Actual = 16.893" to 16.873" • Flange 48 bolt hole pattern - Requirement = 48 bolt hole pattern true position of 0.010" - Actual = True position at 22 holes range up to 0.029"	Fig. 3.1-7, View AT-AT, Sheet 72	201	ET-51

MARTIN MARIETTA
MANNED SPACE SYSTEMS

Forward GO2 Pressure Line Changeout

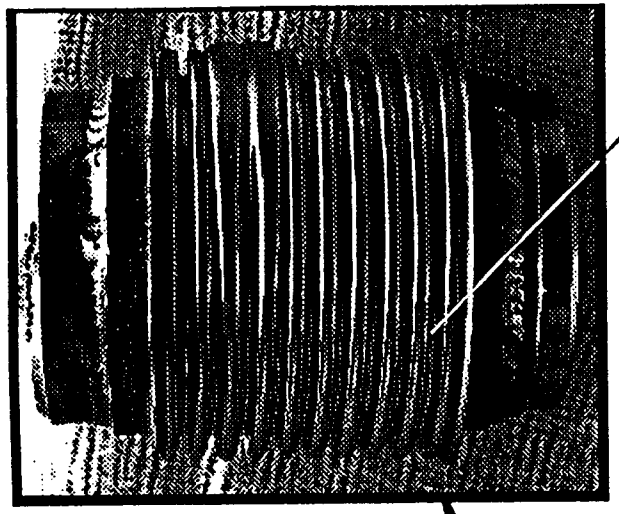

3-ply bellows
0.008 inch/ply
21-6-9 CRES

Ply inverted
by inter-ply
pressure

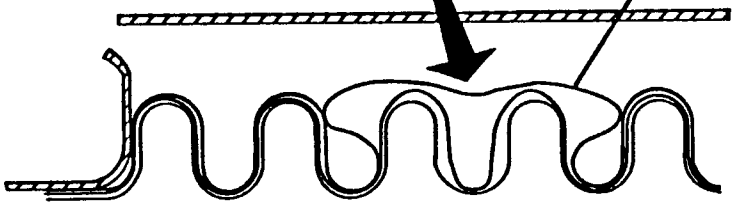

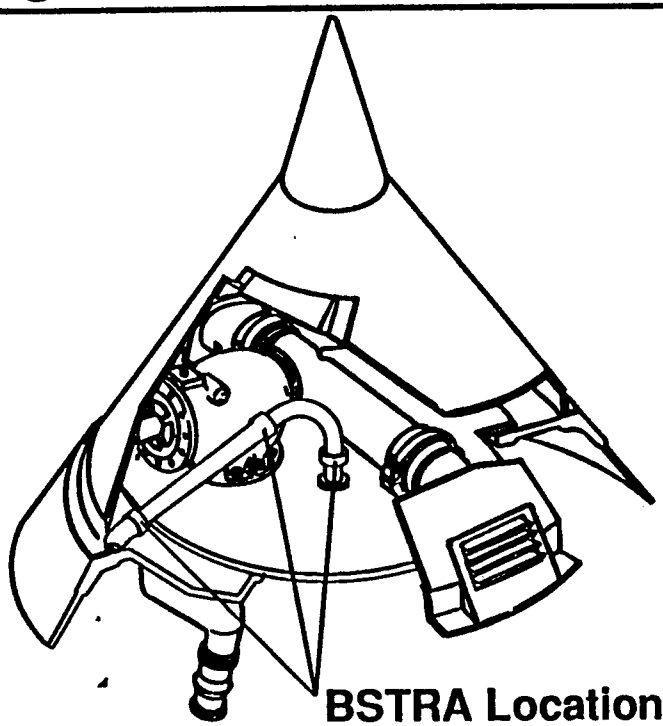

BSTRA Locations

Issue: Potential for inversion of outer and inner ply of 3-ply bellows in two ET-51Ball Strut Tie Rod Assemblies (BSTRA)

MARTIN MARIETTA
MANNED SPACE SYSTEMS

Forward GO2 Pressure Line Changeout

Background

- Vendor visibly detected bellows ply separation in BSTRA detail components prior to Acceptance Test

- Investigation determined ply separation occurred as a result of water intrusion/ entrapment between plies during manufacture which vaporized causing inter-ply pressure during subsequent weld operations
  - Problem isolated to single specific build process (Type VI) used on recent build of GH2/GO2 pressure lines
    - Two defective bellows dissected (MAF and AHP) - Water detected between plies
    - Bellows build processes reviewed - Potential water intrusion/entrapment scenario established
    - Thermal/stress analyses support vaporization of entrapped water by weld heat conduction and resulting ply separation

- Initiated x-ray inspection for ply separation on all installed/non-installed pressure lines and post weld BSTRAs containing Type VI component

Forward GO2 Pressure Line Changeout

Background (continued)

- Analysis/experience indicates slight ply separations OK for flight
  - Functional capability not impaired by anomalous configuration
    - Slight ply separation has insignificant affect on BSTRA angulation
      - Bellows angulation capability twice design requirement of 14 degrees
    - Bellows spring rate and dynamic response virtually unaffected
      - Geometric change of outer ply on one or two convolutes vs 3-ply/10 convolutes is insignificant
    - Spring rates with and without ply separation within specified limits as indicated by test
    - Multi-ply bellows have long dynamic life
      - Aircraft usage: 60,000-90,000 hours
      - ET usage: <100 seconds dynamic
    - Bellows retain adequate factor of safety (Required FS = 1.50)
      - Minimum FS = 4.18 (ultimate), 3 plies effective (as designed)
      - Minimum FS = 2.78 (ultimate), 2 plies assumed effective
    - Corrosion not an issue
      - Laboratory analysis verified water in plies as deionized
        - No aggressive constituents
      - Bellows material high toughness/high corrosion resistance ARMCO 21-6-9

Forward GO2 Pressure Line Changeout

Background (continued)

- ET-51 (STS-54) GO2 pressure line under Nose Cone x-rayed at KSC
  - Two Type VI BSTRAs - No ply separation
    - Thought to be of no concern

Forward GO2 Pressure Line Changeout

Discussion

- Additional testing was conducted , for fleet clearance, to verify flight BSTRA temperatures do not cause continued degradation
  - GH2 pressure line BSTRA flight temperatures (128°F - 145°F) less than AHP processing temperatures (≈1600°F weld area and 300°F drying)
    - No continued degradation concern
  - GO2 pressure line BSTRA flight temperatures (500°F - 550°F) potentially higher than AHP processing temperatures (≈1600°F weld area and 300°F drying)
    - Potential for ply separation
  - 34 BSTRAs real time x-rayed, heated to 625°F for one hour minimum (maximum flight temperature of 550°F) and x-rayed post heating
    - One BSTRA with slight ply separation pre-heating
      - No detectable change post heating
    - Seven BSTRAs with no ply separation pre-heating
      - Slight separation (0.010" to 0.030") post heating in few convolutes
        - OK for flight usage
    - One BSTRA with no ply separation pre-heating
      - Outer ply inversion post heating
        - Effect on flight dynamic capability unknown

Forward GO2 Pressure Line Changeout

Conclusions

- Remove/replace forward GO2 pressure line from ET-51
  - Replacement line BSTRAs produced by different process
    - 450°F bake out prior to closure weld assures no entrapped moisture

Status

- Line replacement complete