# FLIGHT READINESS STATEMENT
# STS-101/ET-102
# EXTERNAL TANK PROJECT
# 2nd DELTA PRE-FLIGHT REVIEW

**EXTERNAL TANK ET-102/STS-101, AS IDENTIFIED IN THE EXTERNAL TANK PROJECT 2nd DELTA PRE-FLIGHT REVIEW DATED APRIL 3, 2000, IS CONSIDERED READY TO SUPPORT FLIGHT UPON ACCEPTABLE DISPOSITION OF OPEN/PLANNED WORK AND/OR OPEN ACTIONS.**

N. E. OTTE/MP31

A. A. McCOOL/MP01

for J. BULLMAN/ED10

for J. W. KILPATRICK/ED20

for A. F. WHITAKER/ED30

for D. A. KROSS/ED40

for A. O. GOODSON/QS01

for C. E. SINGER/TD01

J. W. SMELSER/MP31, CHAIRMAN

March 17, 2000

Space Shuttle
External Tank

# STS-101/ET-102
# Pre-Flight Review

*Michoud Operations*

102pfr.4250.dd.03/00

# Agenda

| | |
|---|---|
| ***Overview*** | ***Jim Feeley*** |
| ***Prior Mission Performance Summary*** | |
| ***Current Mission/External Tank Highlights*** | |
| ET-102 Mass Properties Status | Rick Spring |
| Changes: No significant items | |
| Senior Management Review NCDs | |
| • LH2 Barrel Panel Thickness Violation | Glen Wadge |
| • LO2 Tank Proof Test Readiness | Glen Wadge |
| • TPS Mitigation Issue | Michelle Guillot |
| Special Topic | Don Bolstad |
| • Weld Instruction Card (WIC) Certification | |
| • Incomplete Radiographic Inspection | *To be provided in separate handout* |
| SRM&QA Assessment | Terry McKeough |
| KSC Processing | Fred Lockhart |
| Verification/Certification | Jim Feeley |
| Mission Unique Assessment | |
| Readiness Statement | |
| Appendices | |
| • A: Minor Changes | |
| • B: SRM&QA Assessment | |
| • C: KSC Processing | |
| • D: Previously Presented Items | |
| – Level II Waivers/Level III Deviations | |
| – Contaminated Gas for ET Welding | |

102pfr.4250.dd.03/00

# Overview

This review for STS-101/ET-102 includes:

- Items specific to mission STS-101
- First time differences and "out-of-family" non-conformances not previously flown and/or reviewed
  - There are no significant first time changes on ET-102

FRR Series

| | |
|---|---|
| • ET/SRB Mate Review | 01/28/2000 |
| • Pre-Flight Review | 03/17/2000 |
| • Space Shuttle Vehicle FRR | 04/04/2000 |
| • Prelaunch Mission Management Team Review | 04/16/2000 (NET) |

# Prior Mission Performance Summary

## *STS-99/ET-92 Launch Scrub*

| System | 01/31/00 *(Scrub due to inclement weather at launch site)* |
|---|---|
| • OMRSD/LCC | No violations |
| • Instrumentation | No violations |
| • MPS | Nominal |
| • ET Hazardous Gas | Nominal |
| • TPS | • Crack in -Y vertical strut foam<br>• Frost line near -Y bipod ramp<br>• Acceptable per NSTS 08303 |
| • Facility Ice/Frost | • Both GO2 vent exhaust ports exhibited several icicles (3" to 6" long)<br>• IPR generated to address ice formation |

102pfr.4250.dd.03/00

# Prior Mission Performance Summary

## *STS-99/ET-92, 02/11/2000 Launch*

| System | Performance |
|---|---|
| • OMRSD/LCC | No ET requirement violations |
| • Instrumentation | No violations |
| • MPS | • LH2 tank ullage pressure decreased to 31.92 psia prior to MECO - Below the control band lower limit of 32 psia<br>– No violation of ET requirements<br>– No technical concern, ET pressure maintained well above the lower ICD limit<br>– Violated OMRSD File IX, Data Collection and Analysis Requirements<br>• Preliminary PSIG assessment indicates revision to OMRSD, File IX required |
| • ET Hazardous Gas | Nominal |

102pfr.4250.dd.03/00

# Prior Mission Performance Summary

## *STS-99/ET-92, 02/11/2000 Launch*

| System | Performance |
|---|---|
| • TPS | • 4 cracks in +Y longeron closeout<br>– No offset present indicating proper adhesion<br>– Violated NSTS 08303<br>– IPR dispositioned use as is<br>• Area of topcoat removed during GO2 vent hood retraction<br>• Crack in -Y vertical strut foam and frost line near -Y bipod ramp<br>– Same as previous tanking<br>– Acceptable per NSTS 08303 |
| • Orbiter Tile Damage | • Lower surface hits<br>– Diameter > 1" = 21<br>– Total = 75<br>• Foam performance in-family with NCFI LWTs |
| • Post Flight Photo Review | • Crew photos from cockpit - Poor resolution<br>• Umbilical well photos - No significant anomalies |
| • ET Disposal | Nominal |

102pfr.4250.dd.03/00

# Mission/External Tank Highlights

*as of 3/13/2000*

| | |
|---|---|
| **Mission** | **STS-99** |
| **Launch** | **04/17/2000 (NET)** |
| • Window | 8:42 - 8:52 p.m. ET |
| • Pad | B |
| • Orbiter | Atlantis (OV-104) |
| • Orbital Inclination | 51.6° - Insertion at 190 NM |
| • ET Photo Coverage | • Crew photos from cockpit window<br>• Umbilical well cameras<br>• SRB cameras |
| **Primary Payload** | **ISS (2A.2a) / Spacehab (Double Module)** |
| **Landing** | **04/24/2000 (UR)** |
| • Time | TBD |
| • Location | KSC |
| **External Tank** | **ET-102** |
| **DD250 Acceptance** | 02/01/1999 |
| **Shipped to Launch Site** | 04/02/1999 |

102pfr.4250.dd.03/00

# Agenda

| | |
|---|---|
| Overview | Jim Feeley |
| Prior Mission Performance Summary | |
| Current Mission/External Tank Highlights | |
| ***ET-102 Mass Properties Status*** | ***Rick Spring*** |
| Changes: No significant items | |
| Senior Management Review NCDs | |
| • LH2 Barrel Panel Thickness Violation | Glen Wadge |
| • LO2 Tank Proof Test Readiness | Glen Wadge |
| • TPS Mitigation Issue | Michelle Guillot |
| Special Topic | Don Bolstad |
| • Weld Instruction Card (WIC) Certification | |
| • Incomplete Radiographic Inspection | *To be provided in separate handout* |
| SRM&QA Assessment | Terry McKeough |
| KSC Processing | Fred Lockhart |
| Verification/Certification | Jim Feeley |
| Mission Unique Assessment | |
| Readiness Statement | |
| Appendices | |
| • A: Minor Changes | |
| • B: SRM&QA Assessment | |
| • C: KSC Processing | |
| • D: Previously Presented Items | |
| – Level II Waivers/Level III Deviations | |
| – Contaminated Gas for ET Welding | |

102pfr.4250.dd.03/00

# ET-102 Mass Properties Status

***ET-102 Specification Weight = 58,470 lbs***

- ET102 weighing
  - Platform scale weighing (4/9/99) resulted in a suspect PR (ET-102-ST-0003) written against KSC weight / weighing system
  - ET-102 was re-weighed (2/3/00) with tension link system at KSC
    - Predicted Weight 58,325 lbs
    - As-weighed 58,426 lbs
    - Delta to Predicted +101 lbs
  - Re-weighing of ET-102 invalidates the platform scale weighing and supports the closure of the PR ET-102-ST-0003

- Mission planning
  - MMC-ET-SE40, ET Project - Mass Properties Weight and Balance Report, has been resubmitted to update the ET-102 as-weighed data (2/10/00)
  - Coordination with Level II on 3/14/00 indicates approximately 959lb performance margin for STS-101

102pfr.4250.dd.03/00

# Agenda

| | |
|---|---|
| Overview | Jim Feeley |
| Prior Mission Performance Summary | |
| Current Mission/External Tank Highlights | |
| ET-102 Mass Properties Status | Rick Spring |
| Changes: No significant items | |
| ***Senior Management Review NCDs*** | |
| • ***LH2 Barrel Panel Thickness Violation*** | ***Glen Wadge*** |
| • ***LO2 Tank Proof Test Readiness*** | ***Glen Wadge*** |
| • ***TPS Mitigation Issue*** | ***Michelle Guillot*** |
| Special Topic | Don Bolstad |
| • Weld Instruction Card (WIC) Certification | |
| • Incomplete Radiographic Inspection | *To be provided in separate handout* |
| SRM&QA Assessment | Terry McKeough |
| KSC Processing | Fred Lockhart |
| Verification/Certification | Jim Feeley |
| Mission Unique Assessment | |
| Readiness Statement | |
| Appendices | |
| • A: Minor Changes | |
| • B: SRM&QA Assessment | |
| • C: KSC Processing | |
| • D: Previously Presented Items | |
| – Level II Waivers/Level III Deviations | |
| – Contaminated Gas for ET Welding | |

102pfr.4250.dd.03/00

# LH2 Tank Barrel Panel Thickness Violation (SMR-98-005)

## Issue

- Localized area of LH2 tank barrel panel membrane is below minimum drawing thickness
  - Required panel specific material strength data to meet required factor of safety

## Background

- Inspection of panels at vendor and MAF found undersized areas on machined membrane surfaces
- Changes made to the vacuum holding fixture "O" ring material at vendor caused under thickness conditions
  - "O" rings provide seal at vacuum fixture bolt locations during panel machining
  - New "O" ring material was less compressible causing panel to lift off fixture
  - Local under thicknesses correlated with "O" ring locations on fixture
  - All panels machined after "O" ring change were inspected and assessed
    - 9 panels received 100% inspection, remainder inspected at "O" ring locations only
- Most critical area of under thickness
  - Actual minimum thickness = 0.076"
  - Drawing requirement = 0.090" +/- 0.005"
  - Affected area is 3" in diameter with 1.5" at minimum thickness
- Barrel panel required panel specific material strength assessment to meet required factor of safety

102pfr.4250.dd.03/00

# LH2 Tank Barrel Panel Thickness Violation (SMR-98-005)

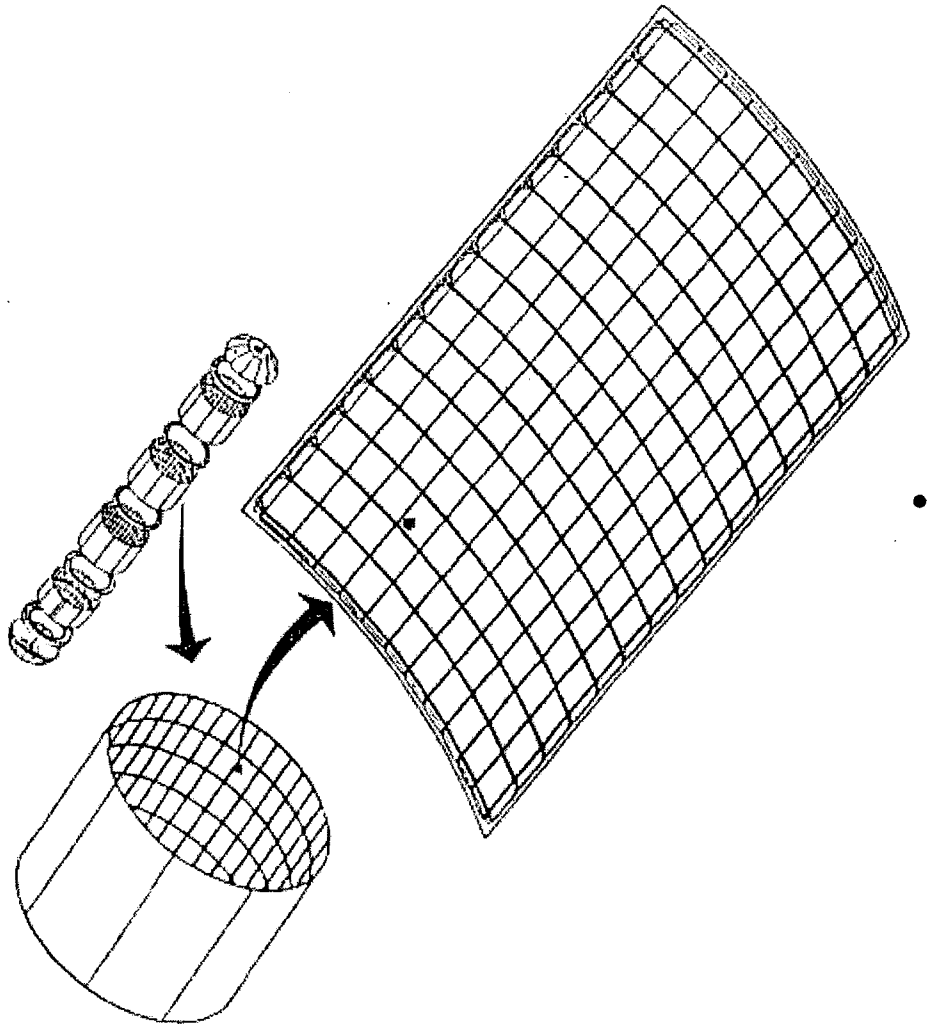

LH2 Tank Barrel

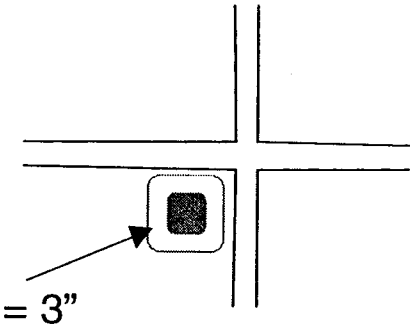

- Affected area = 3”
  - 1.5” at minimum thickness (0.076”)

102pfr.4250.dd.03/00

# LH2 Tank Barrel Panel Thickness Violation (SMR-98-005)

**Basis for Certification**

- *Test*
  - Used panel-specific material properties for this panel (ultimate tensile strengths in ksi)
    - **Coupon Data**

| | Lot Acceptance Data | | | Witness |
|---|---|---|---|---|
| – *Orientation* | *L* | *LT* | *45º* | *LT* |
| • Max | 81.8 | 84.5 | 82.5 | 88.3 |
| • Min | 81.6 | 83.9 | 81.9 | 87.9 |

  - First article cut-up results for thick plate demonstrate that the 3σ low property of a plate is 3% below the average
  - Assessed panel capability reduced based on first article cut-up
    - Ftu = 83.9 - 3% = 81.3 ksi
- *Analysis*
  - Max stress for proof and flight are in the hoop direction or panel LT orientation
  - Stress analysis performed with lot acceptance mechanical material property test data
    - FS maintained

| – Condition | Ftu | Stress | FS | Required |
|---|---|---|---|---|
| • Design | 78.0 | 77.8 | 1.25 | 1.25 |
| • NCD | 81.3 | 80.2 | 1.26 | 1.25 |

  - Area is adequately proof tested
    - Proof test demonstrates 114% of flight limit load
  - No cryo factor used to enhance RT capability
  - Post proof penetrant inspection of this location ISL and OSL revealed no indications

102pfr.4250.dd.03/00

# LO2 Tank Proof Test Readiness (SMR-98-004A)

## Issue

- Review LO2 tank acceptance prior to proof test in light of significant O2/OFO weld intersection repairs

## Background

- Following initial proof test, x-ray of O2/OFO intersections indicated that 6 of the 8 intersections had cracks
  - OFO-1 thru 5 and OFO-8 intersection cracks were repaired
  - OFO-6 and 7 intersections were preemptively repaired
- Repairs were significant (up to R14 max) and involved both intersection welds
- Two intersection repairs had negative proof margins of safety that required consideration of material property and analysis conservatisms
  - Proof test concern only - No flight concern
    - Flight margins are significant
- Heat repairs caused contour deviations up to 0.050" deep in the adjacent ogive membranes

102pfr.4250.dd.03/00

# LO2 Tank Proof Test Readiness (SMR-98-004A)

## Discussion

- Stability of assessment of contour deviations
  - LO2 tank ogive at the O2 weld is stability critical at +/-Y axis during prelaunch
  - Measured imperfections are less than analytical imperfection (assumed for design)
  - Stability MS unaffected

- TPS assessment/mitigation
  - Local sanding of the TPS required to eliminate potential cracking when tank is pressurized
    - LO2 tank ogive foam thickness reduced to 1.30" minimum from Sta 525 to 537 approximately 106" inches across the +Z axis

## Basis for Certification

- *Test*
  - Wide panels prepared to simulate O2/OFO intersections and worst case repairs
  - Panels tested across O2 weld to demonstrate repair strength

| Condition | Pull test values (ksi) | Required (ksi) |
|---|---|---|
| – RT | 42.7, 44.6, 44.0 | 30 |
| – -320ºF | 45.0, 42.5 | 35 |

102pfr.4250.dd.03/00

# LO2 Tank Proof Test Readiness (SMR-98-004A)

## Basis for Certification

- *Analysis*
  - Analysis of all intersecting welds resulted in two OFO welds with negative margins of safety for proof

| Weld | Condition | FS | Required | Proof Demonstrated without Cryo Factor | Proof Demonstrated with Cryo Factor |
|---|---|---|---|---|---|
| – *OFO-3* | Proof | 0.98 | 1.00 | 1.54 | 1.72 |
| | Flt Ult | 1.44 | 1.25 | | |
| – *OFO-8* | Proof | 0.98 | 1.00 | | |
| | Flt Ult | 1.64 | 1.25 | 1.58 | 1.73 |

  - Analysis and material property conservatism
    - Wide panels simulating this repair pulled high vs requirement of 30 ksi RT and 35 ksi @-320ºF
    - Wide panels are shaved flush but OFO-3 and OFO-8 have weld bead remaining
    - Analysis conservatively neglects supporting parent metal on the far side of the O2 weld
    - Al 2219 coupon test data shows a 3 ksi effect in failure strength for coupons with similar peaking/mismatch to the NCD vs 6.6 ksi effect predicted by analysis
    - Wide panel data base has peaking/mismatch with similar magnitude to the hardware
  - Hardware acceptable for proof test based on analysis and material property conservatisms
  - Flight analysis unchanged for OFO-3 and OFO-8
    - Positive margins with standard analysis
  - Area is adequately proof tested
    - Proof test demonstrated well above flight limit load
  - Tank was proof tested successfully

102pfr.4250.dd.03/00

# LO2 Tank Proof Test Readiness (SMR-98-004A)

## TPS Mitigation Issue

- LO2 tank ogive foam configuration for ET-102 does not meet the launch probability requirement specified in NSTS 07700, Volume X, para 3.2.1.2.14.1
  - Requirement specifies that the STS shall be designed so that launch holds due to ice formation shall not occur more than 5% of the time on an annual basis based on atmospheric conditions
    - Local reduction in STS-101/ET-102 foam results in no ice forming in this area ≈ 94.4% of the time vs the 95% requirement
      - Nominal foam thickness was 2.15"
      - Foam reduced to 1.30" to eliminate potential for TPS cracking

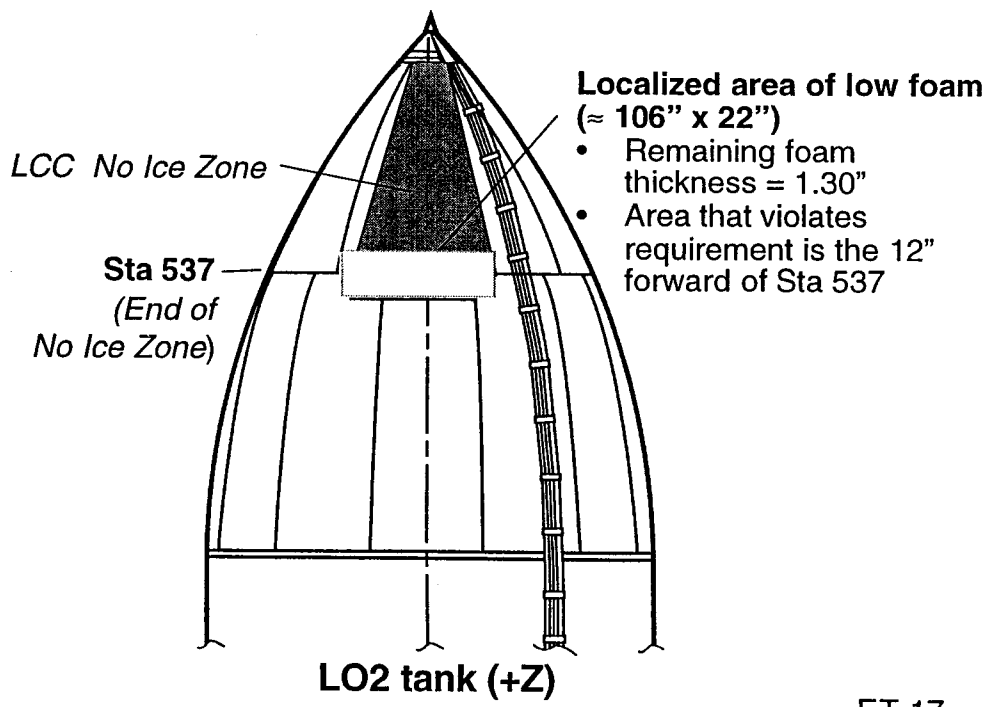


102pfr.4250.dd.03/00

# LO2 Tank Proof Test Readiness (SMR-98-004A)

## Evaluation

- Performed an evaluation of the Probability Model to reduce analysis conservatism

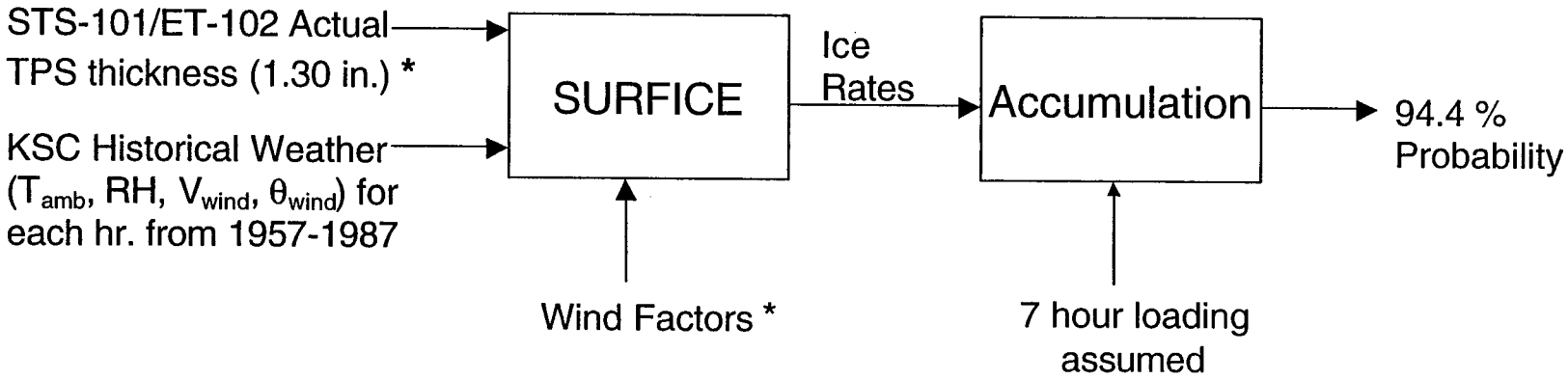


* Parameters revised to reduce conservatism

- Assessed results of actual prelaunch experience
  - TPS surface temperatures measured using IR during prelaunch generally above SURFICE prediction but not universally

102ptr.4250.dd.03/00

# LO2 Tank Proof Test Readiness (SMR-98-004A)

## Rationale for Acceptance

- STS-101/ET-102 currently scheduled for launch NET 4/17/00
  - Launch probability for April to November > 95%
- Prediction of ice formation will be assessed using the tools defined in the Launch Commit Criteria (cameras, SURFICE, IR temperature data and visual inspection)
  - Final Inspection Team makes recommendation to the Mission Management Team after data review
- No safety of flight concern - Prelaunch concern only
  - LCC prohibits launch if ice is present

## Status

- Level II waiver approved 03/10/2000 (PRCBD S071290)
- Level III DAR approved 03/15/2000 (CCBD 9628)

102pfr.4250.dd.03/00

# Agenda

| | |
|---|---|
| Overview | Jim Feeley |
| Prior Mission Performance Summary | |
| Current Mission/External Tank Highlights | |
| ET-102 Mass Properties Status | Rick Spring |
| Changes: No significant items | |
| Senior Management Review NCDs | |
| • LH2 Barrel Panel Thickness Violation | Glen Wadge |
| • LO2 Tank Proof Test Readiness | Glen Wadge |
| • TPS Mitigation Issue | Michelle Guillot |
| ***Special Topic*** | ***Don Bolstad*** |
| • ***Weld Instruction Card (WIC) Certification*** | |
| • ***Incomplete Radiographic Inspection*** | ***To be provided in separate handout*** |
| SRM&QA Assessment | Terry McKeough |
| KSC Processing | Fred Lockhart |
| Verification/Certification | Jim Feeley |
| Mission Unique Assessment | |
| Readiness Statement | |
| Appendices | |
| • A: Minor Changes | |
| • B: SRM&QA Assessment | |
| • C: KSC Processing | |
| • D: Previously Presented Items | |
| – Level II Waivers/Level III Deviations | |
| – Contaminated Gas for ET Welding | |

102pfr.4250.dd.03/00

# Weld Instruction Card (WIC) Certification

## *Issue*

- During a recent weld schedule review, it was determined that several of the weld schedules were incorrectly certified

## *Background*

- Weld certification requirements are established through Engineering process requirements documents
  - Certification requirements verify that weld schedules produce acceptable weld strengths and quality
  - Requirements are then restated and implemented in the "how to" manufacturing process documents
- Ambiguity of the weld process documents and reliance on institutional knowledge led to instances of incomplete testing for weld certification

# Weld Instruction Card (WIC) Certification

## *Background (continued)*

- Performed LMMSS Quality and Engineering review of all "as-built" ET welds including ET-102
  - Discrepancies were documented on non-conformance documents (NCDs)
  - Each NCD was individually analyzed, dispositioned and approved by LMMSS and NASA/MSFC
  - When necessary, additional welded panels were fabricated and tested
  - All discrepant weld schedules were reviewed to the correct certification condition
  - Weld operations were suspended until discrepancies were resolved

- Process escapes led to end-to-end weld process review
  - LMMSS and NASA/MSFC conducted a series of reviews in Fall '99 of all ET welding processes
    - No significant findings that required immediate implementation prior to weld operations resuming
    - 49 findings that require resolution:
      - Procedural enhancements
      - Communication/information flow down
      - Adherence to command media
      - Training enhancement opportunities
    - One additional issue identified during the NASA/LMMSS Review
      - Design strength of welds (cryogenic properties) due to effect of weld parameter variations was in question

102ptr.4250.dd.03/00

# Weld Instruction Card (WIC) Certification

## *Discussion*

- Team also conducted an assessment of the weld strength and determined that adequate rationale existed for ET-101 and ET-92 clearance

- Assessment included
  - Weld-by-weld reviews
  - Review of as-built parameter charts
  - ET-101 as-delivered weld tests
  - Parameter range test data
  - Wide panel and confidence panel data
  - Fracture property review
  - Proof test stresses and history
  - Flight stress analysis

- LMMSS, with MSFC concurrence, initiated a test program that would verify the weld parameter variations (box) of all remaining ETs:
  - 9 weld schedules
  - 7 weld tools
  - RT and cryogenic tensile tests
  - Tested hot/hot weld schedules, nominal weld schedules and cold/cold weld schedules

# Weld Instruction Card (WIC) Certification

## *Clearance Rationale Actions*

- Parameter box testing complete (03/10/00)
  - Results indicate the WIC parameter box produces welds that meet or exceed weld certification requirements
  - Data provided to MSFC (3/15/00)
  - Final report in work at MAF (ECD 03/31/00)
    - Final acceptance rationale pending MSFC concurrence

- ET-102 weld-by-weld testing complete (2/25/00)
  - Assessment results similar to ET-101 and ET-92 rationale
    - No issues
  - Data will be compiled for submittal to MSFC (ECD 03/17/00)
    - Final acceptance rationale pending MSFC concurrence

102pfr.4250.dd.03/00

# *Incomplete Radiographic Inspection*

***To be provided in separate handout***

102pfr.4250.dd.03/00

# Agenda

| | |
|---|---|
| Overview | Jim Feeley |
| Prior Mission Performance Summary | |
| Current Mission/External Tank Highlights | |
| ET-102 Mass Properties Status | Rick Spring |
| Changes: No significant items | |
| Senior Management Review NCDs | |
| • LH2 Barrel Panel Thickness Violation | Glen Wadge |
| • LO2 Tank Proof Test Readiness | Glen Wadge |
| • TPS Mitigation Issue | Michelle Guillot |
| Special Topic | Don Bolstad |
| • Weld Instruction Card (WIC) Certification | |
| • Incomplete Radiographic Inspection | To be provided in separate handout |
| ***SRM&QA Assessment*** | ***Terry McKeough*** |
| KSC Processing | Fred Lockhart |
| Verification/Certification | Jim Feeley |
| Mission Unique Assessment | |
| Readiness Statement | |
| Appendices | |
| • A: Minor Changes | |
| • B: SRM&QA Assessment | |
| • C: KSC Processing | |
| • D: Previously Presented Items | |
| – Level II Waivers/Level III Deviations | |
| – Contaminated Gas for ET Welding | |

102pfr.4250.dd.03/00

# SRM&QA Assessment

*as of 03/15/2000*

| Item | Status |
|---|---|
| **ALERTS** | None open |
| **MRB Assessment** | Complete - No issues/no impact to hazard controls |
| **Hazard Assessment** | Complete - All hazard reports were re-assessed and hazard controls verified |
| **Corrective Action Problem Summary (CAPS)** | |
| • T-067PF, Loss of Intertank SOFI during Ascent of STS-87/ ET-89 (Documents IFA) | Submitted to MSFC for Closure |
| • P-089, Incorrect weld rod used on 21-6-9 pressline | ET-102 cleared - Correct weld rod used on ET-102 |
| • S-082, Contaminated Argon gas for ET welding | ET-102 cleared - Contaminated gas not used for ET-102 welding operations |
| • P-090, Leaking GH2 pressline seal on ET-109 | ET-102 cleared - Successfully passed leak test at MAF |

102pfr.4250.dd.03/00

# Agenda

| | |
|---|---|
| Overview | Jim Feeley |
| Prior Mission Performance Summary | |
| Current Mission/External Tank Highlights | |
| ET-102 Mass Properties Status | Rick Spring |
| Changes: No significant items | |
| Senior Management Review NCDs | |
| • LH2 Barrel Panel Thickness Violation | Glen Wadge |
| • LO2 Tank Proof Test Readiness | Glen Wadge |
| • TPS Mitigation Issue | Michelle Guillot |
| Special Topic | Don Bolstad |
| • Weld Instruction Card (WIC) Certification | |
| • Incomplete Radiographic Inspection | To be provided in separate handout |
| SRM&QA Assessment | Terry McKeough |
| ***KSC Processing*** | ***Fred Lockhart*** |
| Verification/Certification | Jim Feeley |
| Mission Unique Assessment | |
| Readiness Statement | |
| Appendices | |
| • A: Minor Changes | |
| • B: SRM&QA Assessment | |
| • C: KSC Processing | |
| • D: Previously Presented Items | |
| – Level II Waivers/Level III Deviations | |
| – Contaminated Gas for ET Welding | |

102pfr.4250.dd.03/00

# KSC Processing - Status

***as of 03/15/2000***

## Discrepancy Reports (DRs)/Problem Reports (PRs) Review

- All PR/MRB discrepancies/dispositions similar to previously flown vehicles
- All MRBs have been reviewed by MAF Reliability for potential SMR

## Limited Life Component/ET Status

- All within required life through scheduled launch date plus 90 days

**OMRSD Exceptions/Waivers:** None

102ptr.4250.dd.03/00

# KSC Processing - Status

***as of 03/15/2000***

**Changes**

- ET modifications

| | | |
|---|---|---|
| - Mod Kits | 0 | |
| - DC&R | 0 | |
| - Bldg 45 | 2 | • MPS 2" disconnect poppet inspection<br>• Suspect ET weight data |
| - FEC | 4 | • Thrust panel foam venting<br>• Extended thrust panel foam venting<br>• Bathtub area foam venting<br>• Skin/stringer panel foam venting |
| - OMRSD/LCC | 0 | |
| - Facility | 2 | • LO2 ORB/ET Disconnect Cavity Purge<br>• Nose cone purge disable command added to shut-off valve |
| - Software | 1 | • Added nose cone purge enable command |

| | |
|---|---|
| SIM Launch (S0044) | 03/17/00 |
| SIM Load (S0056) | 03/28/00 |

102pfr.4250.dd.03/00

# Agenda

| | |
|---|---|
| Overview | Jim Feeley |
| Prior Mission Performance Summary | |
| Current Mission/External Tank Highlights | |
| ET-102 Mass Properties Status | Rick Spring |
| Changes: No significant items | |
| Senior Management Review NCDs | |
| • LH2 Barrel Panel Thickness Violation | Glen Wadge |
| • LO2 Tank Proof Test Readiness | Glen Wadge |
| • TPS Mitigation Issue | Michelle Guillot |
| Special Topic | Don Bolstad |
| • Weld Instruction Card (WIC) Certification | |
| • Incomplete Radiographic Inspection | To be provided in separate handout |
| SRM&QA Assessment | Terry McKeough |
| KSC Processing | Fred Lockhart |
| ***Verification/Certification*** | ***Jim Feeley*** |
| ***Mission Unique Assessment*** | |
| Readiness Statement | |
| Appendices | |
| • A: Minor Changes | |
| • B: SRM&QA Assessment | |
| • C: KSC Processing | |
| • D: Previously Presented Items | |
| – Level II Waivers/Level III Deviations | |
| – Contaminated Gas for ET Welding | |

102pfr.4250.dd.03/00

# Verification/Certification

*as of 03/15/2000*

| Item | Status |
| --- | --- |
| **NSTS 07700, Volume X Baseline**<br>• Revision M, Change 261 | No Issues |
| **Certification documentation**<br>• Hardware Certification Sheets (HCS)<br>• Certificates of Qualification (COQ) | Complete - No Issues |
| **Waivers/Deviations**<br>• Waiver to 95% Launch Probability Requirement | • Previously discussed with LO2 Tank Proof Test Readiness SMR<br>– Waiver approved 03/10/2000 (PRCBD S071290)<br>– DAR approved 03/15/2000 (CCBD 9628) |

102pfr.4250.dd.03/00

# Mission Unique Assessment

***as of 03/15/2000***

| Category/Item | STS-101 |
| --- | --- |
| Review of MRB actions using updated loads | ECD 03/30/2000 (UR) |
| MPS Preflight Prediction Package | ECD 04/07/2000 (UR) |

102pfr.4250.dd.03/00

# Readiness Statement

**The External Tank, ET-102, is hereby certified and ready for STS-101 flight pending completion/closure of open and planned work**

---

**Ronald W. Wetmore**
**Vice President, External Tank Project**
**Lockheed Martin Space Systems Company**

102pfr.4250.dd.03/00

*Michoud Operations*

# Appendices

## A: Minor Changes

## B: SRM&QA Assessment

- NCD Assessment Criteria

## C: KSC Processing

- PR/MRB Summaries
- Modification Summaries/Status
- Limited Life Component Status
- Facility Modifications
- Software Changes
- OMRSD Exceptions/Waivers: None
- OMRSD Changes (RCNs): None

## D: Previously presented items

- Level II Waivers/Level III Deviations
- Contaminated Argon Gas for ET Welding

# Minor Change

## *STS-101/ET-102 Intertank Vented Foam*

- Zone I - Vented bathtubs = 8 $ft^2$
- Zone II - Vented thrust panel area = 102 $ft^2$
- Zone III - Vented skin/stringer areas = 725 $ft^2$

Unvented area = 18 $ft^2$ (ramps) + 10 $ft^2$ (cryo) = 28 $ft^2$ (total)

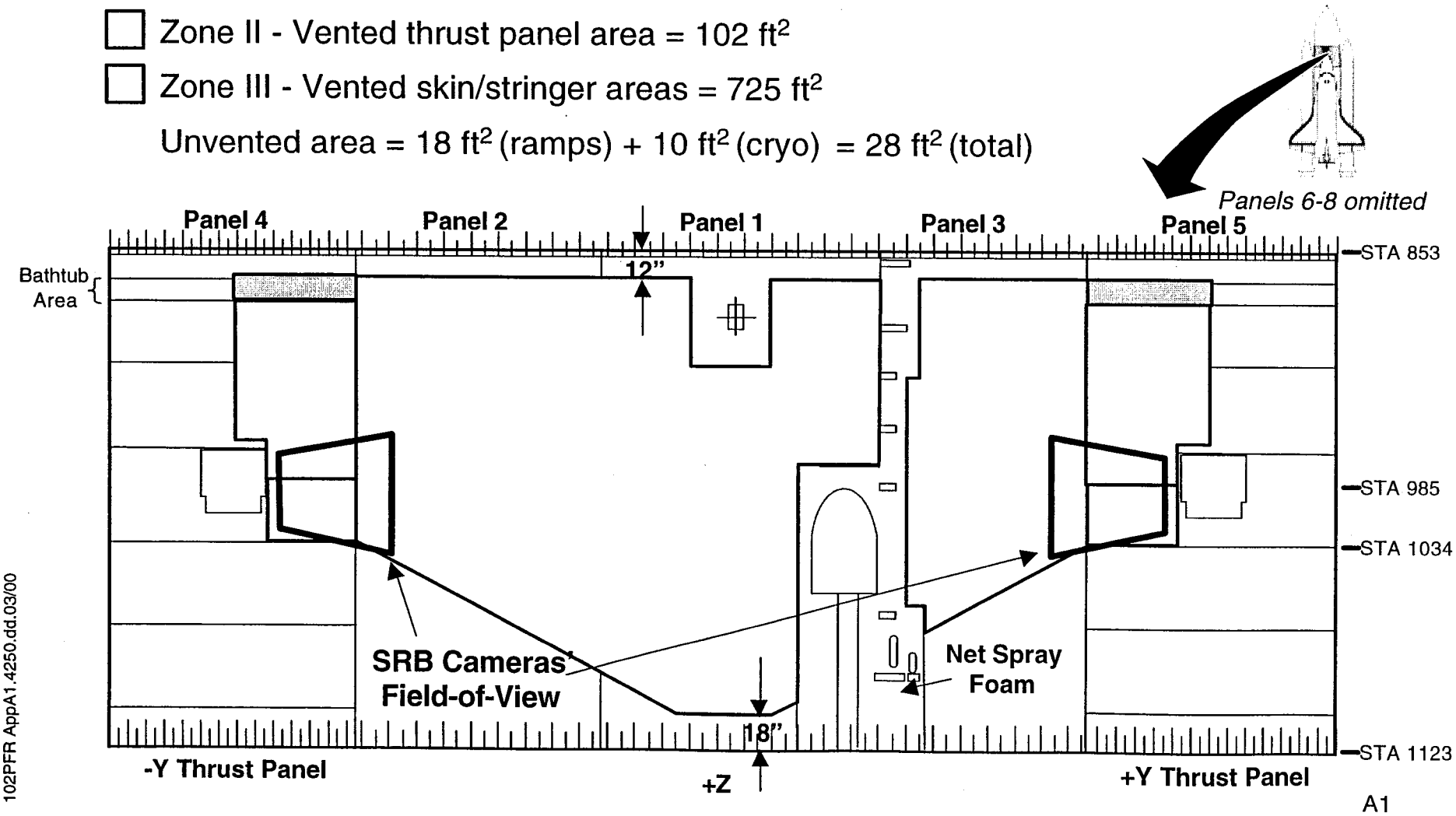


102PFR AppA1.4250.dd.03/00

A1

# Change Presentation Criteria

- Changes for Presentation
  - *Type I Documentation*
  - *Requirements*
  - *Configuration* (affects part interchangeability)
  - *Materials* (requires SE16 revision)
  - *Technical Changes to Processes* (STPs)
- Changes for inclusion in Appendix
  - *Minor configuration* (affects part interchangeability)
  - *Minor updates* - Does not affect part interchangeability, materials or processes
    - Revise point of incorporation
    - Drawing clarification
    - Non-flight hardware installation/removal
    - Datum changes
    - Update usage/List of Materials
    - Drawing incorporation errors
    - Manufacturing aid
    - Drawing errors
    - Fastener type/grip
    - Producibility
    - Update vendor list
    - Laboratory test procedures
    - Materials
- All Class I and Class II changes have been reviewed by the MSFC Resident Office
- All Class II STP/STM/Standard/Code sheet changes have been submitted to the MSFC Materials, Processes and Manufacturing Department for concurrence

# Minor Changes – Documentation and Requirements

| Change | Description | Basis for Certification |
|---|---|---|
| B81515<br>▪ Revise Configuration Management Plan (CMO1) to streamline FEC (Field Engineering Change) processing<br>▪ Revise CMO1 and TMO1 (ET Verification Plan) for identification of Class I criteria regarding supplier changes of critical hardware | ▪ Documents informal policy of not releasing engineering of FEC approved configuration<br>▪ Create document to identify hardware that is considered "suppliers critical"<br>- Items included in the document<br>▪ Components currently qualified by COQ<br>▪ Thermal Protection Materials (TPS)<br>▪ Composite parts | ▪ Similarity |
| Remove traceability requirements from Intertank hardware details (J31202) | ▪ Removed traceability requirements from Intertank details as cost savings candidate<br>▪ Data was collected for 25 ship sets of hardware without an issue that required search by lot/date code<br>▪ Fracture Control Board agreed to eliminate traceability requirements<br>▪ Added 'Aluminum Surface Defect Acceptance Criteria' document to Al 2090 sheet metal details and assemblies used in the Intertank<br>▪ Facilitates procurement from multiple suppliers in support of MAF-built Intertank skin/stringer panel assemblies | ▪ Analysis<br>▪ Similarity |

# Minor Changes – Documentation and Requirements

| Change | Description | Basis for Certification |
| --- | --- | --- |
| Revised SLWT LH2 Barrel Panel handling and shipping requirements (J31205) | ▪ Supplier reliability enhancement<br>  ▪ Ensure that supplier always utilizes two-point pick-up on barrel panels and employs appropriate handling requirements to prevent panel damage<br>  ▪ Deleted 'panel shoes' or protective edge guards, from the barrel panels<br>  ▪ Permitted lifting at MAF by two point pick-up in the tooling holes | ▪ Analysis |

# Minor Changes

| Change No. | Discipline | Description |
|---|---|---|
| H35809-702 | Structure | Revised Intertank panel drawing to show correct fastener location |
| H36809-290 | Structure | Relaxed tolerances of castings and fittings to accommodate new supplier requirements<br>▪ Existing mold tools were unusable due to orientation |
| H36809-297 | Structure | Corrected part on vertical strut/cable tray drawing to agree with part specified on parts list |
| H36809-318 | Structure | Deleted use of optional bolt from Nose cone installation drawing. Correct bolts were used |
| H36809-328 | Structure | Changed machined corners on pictorial drawing to agree with manual drawing. Parts built to manual drawing |
| H36809-330 | Electrical | Documentation change only - Revise ET/SRB forward cross strap cable drawings to indicate that these harnesses are Crit 1R |
| H36809-331 | Structure | Clarified fillet radius requirement on machined fitting drawing. Requirement not clearly identified on drawing |
| H36809-334 | Structure | Revised composite nose cone and spike assembly drawing to replace erroneously specified O-ring. Erroneous part was non-existent |

# Minor Changes

| Change No. | Discipline | Description |
|---|---|---|
| H36809-344 | Structure | Corrected appearance of mounting bracket machined features (solid line vs dashed line) |
| H50001-816 | TPS | Added “future closeout” designators to specific surfaces of a group of LO2/LH2 Umbilical Cable Tray component parts that receives additional TPS closeout operations at subsequent assembly. This process allows acceptance of local TPS defects at the component build level to be repaired at a subsequent assembly level |

# Minor Changes – STD/STM/STP/AVL

| Change No. | Document | Description |
|---|---|---|
| H36809-137 | STP 5008/<br>STP 5011 | ▪ Added K1B7 wiping cloth saturated with solvent HCFC 225 (K1A4A) for clean room verification use<br>▪ Added a solvent selection table to provide a guide in cleanliness verification processes as to LOX compatibility, TLV levels and where to use a particular solvent in the cleaning process<br>▪ Further clarified STPs to list where, on external surface operations, specific materials shall be used for LH2 and pneumatic particulate verification in STP5008 and to preclude fabrication of the particulate barrier for QLI wipe tests and lapping operations in STP5011 |
| H36809-314 | EQTP 1003 | Revised TPS fingerprinting test procedure to delete obsolete materials (NCFI 22-65, CPR, etc) and non-critical tests (GPC of A components) |

# NCD Assessment Criteria

- Assessment of all MRB Items
  - Adequacy of technical dispositions
  - Completeness of required repair/retest
  - First time occurrences/SMR
  - Verification of margin of safety assessment/documented
  - Review of impact to hazards
  - Engineering review for impact to loads
  - Engineering review for reduced extrusion to plate weld allowables

# ET-102 DR/PR/OMRSD Waiver/Exceptions

***as of 03/15/2000***

| System | Discrepancy | Problem | MRB Items | Exceptions/ Waivers |
|---|---|---|---|---|
| *Electrical* | 0 | 1 | 0 | 0 |
| *Propulsion/ Pneumatics* | 0 | 3 | 1 | 0 |
| *Structures* | 1 | 4 | 0 | 0 |
| *Thermal (TPS)* | 1 | 7 | 1 | 0 |
| ***Total*** | **2** | **15** | **2** | **0** |

102ptr.4250.dd.03/00

# ET-102 PR/MRBs

| PR No./Status | Title/Description | Disposition |
|---|---|---|
| ***Thermal*** | | |
| PET-102-TS-0003 | One area of low foam at Sta 2033 (approx. 2" x 2") and one area of foam void/cut near Sta 2020 (4" x 0.25"x 0.6" deep) | • Use-as-is for low foam<br>• Repair void with PDL-1034 |
| ***Propulsion/Pneumatics*** | | |
| PET-102-TS-0003 | Orientation of helium inject tube is not per drawing. Tag is taped against tube assembly. | • Use as is |

102pfr.4250.dd.03/00

# ET-102 KSC Modification Summary/Status

- **Field Engineering Changes**

| | | |
|---|---|---|
| – FEC KET-0055 | Intertank Thrust Panel Foam Venting | Work Complete |
| – FEC KET-0057 | Intertank Thrust Panel Foam Venting | Work Complete |
| – FEC KET-0062 | Intertank Thrust Panel Foam Venting | Work Complete |
| – FEC KET-0063 | Intertank +Z Stringer Area Foam Venting | Work Complete |

- **Non-Standard Work**

| | | |
|---|---|---|
| – J5295 | MPS 2” disconnect poppet inspection | Work Complete |
| – J5297 | Suspect ET weight data | Work Complete |

102pfr.4250.dd.03/00

# ET-102 Limited Life Components

## *Cycle Sensitive*

| Description | Part No. | Serial No. | Limit | Required | Remaining |
|---|---|---|---|---|---|
| LH2 Manhole Cover Assy | 80914081488 -509 | 0000676870 | 14 | 2 | 14 |
| LO2 Tank Mechanical Assy | 80912002000 -500 | 0000659500 | 14 | 2 | 14 |
| LH2 Tank Proof Test | 80914002000 -500 | 0000709580 | 14 | 2 | 14 |
| LO2 Manhole Cover Assy | 80911001205 -509 | 0000707140 | 14 | 2 | 14 |
| LO2 Fwd Ogive Cover Plate | 80911001207 -509 | 0000729850 | 14 | 2 | 14 |
| LH2 Manhole Cover Assy -Aft | 80911001444 -509 | 0000704090 | 14 | 2 | 14 |
| LH2 Tank Cap, Closure Siphon | 80911001445 -502 | 0000743060 | 14 | 2 | 14 |

102pfr.4250.dd.03/00

# ET-102 Limited Life Components

## *Age Sensitive*

| Description | Part No. | Serial No. | Limit | Initiation | Expiration |
|---|---|---|---|---|---|
| External Tank | 80901000000 -500 | 00000085 | 6 Yrs | 2/99 | 2/2005 |

102pfr.4250.dd.03/00

# ET-102 Limited Life Components

***Age Sensitive Pyrotechnics - 10 Years Life/Requires Lot Verification Tests After 4 and 7 Years***

| Description | Part No. | Lot No. | Serial No. | Latest Retest | Expiration |
|---|---|---|---|---|---|
| Separator Assy GUCP | PD5000020-059 | AAH | 0001147 | 02/24/1998 | 01/2002 |
| Cartridge Assy | PD5000020-030 | AAH | 0001298 | 02/24/1998 | 01/2002 |
| Cartridge Assy | PD5000020-030 | AAH | 0001300 | 02/24/1998 | 01/2002 |

102pfr.4250.dd.03/00

# STS-101 Facility/Software Modifications

- **Facility**
  - *LO2 ORB/ET Disconnect Cavity Purge*
    - Orbiter/ET Disconnect Cavity purge valve command and enable command were on the same HIM and HIM card
    - The enable command was moved to another HIM and HIM card

- **Facility/Software**
  - *Nose Cone Purge*
    - "Disable" command was added to nose cone purge shut-off valve A106425
      - This was to recover from a possible failure where the HIM card fails in the ON state keeping the solenoid valve closed.
      - The disable command removes power from the close command solenoid valve to allow reinitiation of the Nose Cone purge
    - Software added the enable command to the displays and component programs

102pfr.4250.dd.03/00

# Level II Waivers - Baseline

| Document / Requirement | Authority | Paragraph | Waiver No. | Effectivity |
|---|---|---|---|---|
| **NSTS 07700 Vol V – Information Management Requirements** | | | | |
| Generic part name, type, common designation, and part manufacturer H4 code are not required for EEE parts status print out | S00127B 6/28/88 | Table C.5 Item 2SR-10 | 6 | ETs 49 & up |
| Data required in limited life status report is supplied in acceptance data package | S00127B 6/28/88 | Table C.6 Item 2SR-7 | 8 | ETs 49 & up |
| Requirement to deliver element pressure vessel historical data to EPO will remain at contractor facility | S00127B 6/28/88 | Table C.6 Item 2SR-7 | 10 | ETs 49 & up |

# Level II Waivers - Baseline

| Document / Requirement | Authority | Paragraph | Waiver No. | Effectivity |
|---|---|---|---|---|
| **NSTS 07700 Vol X – Space Shuttle Flight and Ground System Specification, Book 1 Requirements** | | | | |
| Electrical wiring of redundant systems NSTS 08080-1, 20A/4B | S040732G 6/18/88 | Table 2.0 | 362 | ETs 23, 27-29, 31 & up |
| Soldering, circuit boards, and connectors | S040732M 9/9/88 | 3.6.15.1.1 | 379 | ETs 23, 27-29, 31 & up |
| PD7400106 circuit boards | S040732M 9/9/88 | 3.6.15.2.1 | 382 | ETs 23, 27-29, 31 & up |
| Pressure transducer circuit boards | S040732M 9/9/88 | 3.6.15.2.1 | 383 | ETs 23, 27-29, 31 & up |
| Debris prevention | S082962A 10/2/98 | 3.2.1.2.14 | 675 | ETs 92, 97-105 |

# Level II Waivers - Baseline

| Document / Requirement | Authority | Paragraph | Waiver No. | Effectivity |
|---|---|---|---|---|
| **NSTS 07700 Vol X – Space Shuttle Flight and Ground System Specification, Book 1 Requirements** | | | | |
| Launch holds due to ice formation shall not occur more than 5% of time on annual basis | S071290 03/10/00 | 3.2.1.2.14.1 | 682 | ETs 102, 107 -110 |
| **NSTS 07700-10-MVP-01– Shuttle Master Verification Plan** | | | | |
| Environmental acceptance of ET components | S002130H 3/7/89 | 3.7.1 | 13 | ETs 23, 27-29, 31 & up |
| **NSTS 08123 Certification of Flexible Hoses and Bellows** | | | | |
| LH2 feedline bellows | S005203G-R1 8/2/91 | 1.2 | 3 | ETs 42-45, 47 & up |

# Level II Waivers - Baseline

| Document / Requirement | Authority | Paragraph | Waiver No. | Effectivity |
|---|---|---|---|---|
| **SL-E-0001 – Specification Electromagnetic Compatibility Requirement** | | | | |
| Wire marking is not applicable to the ET | S40732K 9/27/89 | 3.2.5 | 3 | ETs 23, 27-29, 31 & up |
| **SW-E-0002 – Ground Support Equipment General Design Requirements** | | | | |
| Factor of safety applied to yield for GUCP leg | S87020L 8/17/88 | 3.4.2.1 | 21 | ETs 23, 27-29, 31 & up |

# Level III Deviations

| Document / Requirement | Paragraph | DAR No. | Effectivity |
|---|---|---|---|
| **CPTO1M09A, External Tank Contract End Item Specification** | | | |
| • Photographic evidence shows a loss of foam from both +Y and –Y Intertank Thrust Panels<br>• Analysis concluded a low probability of debris impact on Orbiter critical area | 3.2.5 | 233 | ETs 92, 97-99, 101-105 |
| Thermal Protection System performance<br>• ET TPS shall prevent ice accumulation in the ET critical zone | 3.2.1.6.1 | 239 | ETs 102, 107-110 |

# Contaminated Argon Gas for ET Welding

- **Issue**
  - Out of specification $CO_2$ levels detected in bottles of Argon gas used for welding at MAF
    - Concern is potential weld strength impact

- **Background**
  - During fabrication of weld test panels at MAF, weld technician noticed a distinct visual change in the quality of a 2195 weld after changing the bottle of weld gas
    - Argon is used in both shield gas and plasma gas in variable polarity plasma arc welds (VPPAW)
    - Argon is also used in the backside shielding gas for 2195 welds
  - The Argon gas was supplied by Doussan Tri-Gas Facility in New Orleans
    - Facility is also used for the production of 75% Argon / 25% $CO_2$ weld gas

## Contaminated Argon Gas for ET Welding

- **Background (continued)**
  - Testing of Argon in K-bottle indicated that gas had Carbon bearing gases (including $CO_2$) at a level greater than 5 ppm maximum allowable (22 ppm)
  - Most recent lot received from supplier had highest level of $CO_2$ (40 ppm)
  - Testing of lots at MAF consisted of one or two bottles from each lot
    - Bottle filling process at Doussan is conducive to all bottles of the same lot having similar $CO_2$ content
      - Tests indicated that either all bottles from lot passed acceptance or all bottles from lot failed
  - 41 different lots of Argon weld gas were available at MAF and were tested for $CO_2$ content
    - Delivery dates of the 41 lots ranged from 10/1996 to 01/2000
    - Total of 290 lots were delivered to MAF in this time period
  - The trend chart indicates a "special processing event" occurred after 11/13/1999
    - 33 tested lots delivered 01/1996 through 11/1999 showed no

# Contaminated Argon Gas for ET Welding

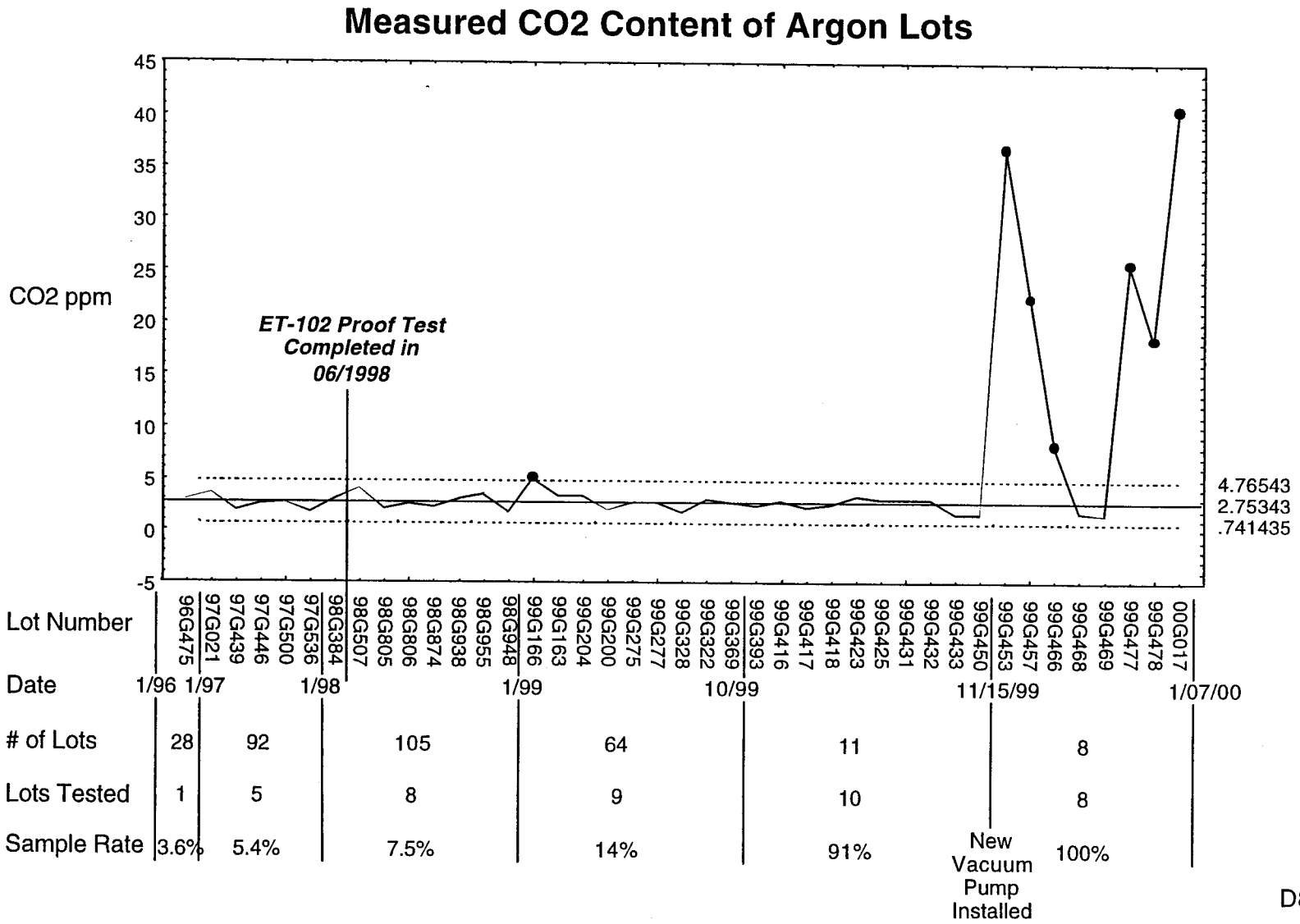

# Contaminated Argon Gas for ET Welding

- **Evaluation of Argon Facility Processing**
  - Doussan supplies high purity Argon gas and $CO_2$/Argon mix gas
    - High purity Argon gas is used for ET welding
  - Common vacuum pump is used to evacuate both the high purity Argon system and the Argon/$CO_2$ system
  - No non-conforming test results were noted prior to vacuum pump replacement (pre 11/99)
  - Common vacuum pump was replaced
    - 6 contaminated lots were filled at the same time that $CO_2$ weld mix cylinders were being processed
    - 2 acceptable lots were processed when there was no Argon/$CO_2$ weld mix being processed
  - Failure scenario was demonstrated at supplier
    - Test run with 20% Argon/$CO_2$ weld mix, processed at the same time as high purity Argon, using normal operating practices, resulted in unacceptable levels of $CO_2$ contamination

# Contaminated Argon Gas for ET Welding

- **Conclusion**
  - New vacuum pump allowed $CO_2$ contamination to occur when $CO_2$/Argon weld gases were processed
  - STS-101/ET-102 welding was performed prior to receipt of contaminated gas at MAF
- **Rationale for Acceptance**
  - ET-102 welds were not subjected to $CO_2$ contaminated Argon gas
    - ET-102 welds performed between July 1996 and June 1998
    - Vacuum pump installed November 1999
  - Successful completion of proof test and all post proof inspections

March 24, 2000

Space Shuttle
External Tank

# STS-101/ET-102 Delta Pre-Flight Review

102DeltaPFR.4250.dd.03/00

# STS-101/ET-102 Delta Pre-Flight Review Agenda

- ***Weld Instruction Card (WIC) Certification Status*** — ***Don Bolstad***
- *STS-101/ET-102 Missing X-Ray Film* — *Glen Wadge*
- *Readiness Statement*
- *Appendix*
  - WIC Certification
    - *Charts presented at Pre-Flight Review on 3/17/00*

102DeltaPFR.4250.dd.03/00

# Weld Instruction Card (WIC) Certification Status

**Issue**

- WIC certification of cryogenic properties for STS-101/ET-102
  - Open at Pre-Flight Review on 03/17/00

**STS-101/ET-102 Clearance Rationale**

- Team conducted an assessment of the weld strength and cryogenic properties
  - Determined that adequate rationale existed for ET-102 clearance
  - Assessment included
    - Weld-by-weld reviews
    - Review of as-built parameter charts
    - ET-102 as-delivered weld tests
    - Parameter range test data
    - Wide panel and confidence panel data
    - Fracture property review
    - Proof test stresses and history
    - Flight stress analysis
  - Cryogenic properties found to be acceptable
  - Data has been compiled and submitted to MSFC
    - Final acceptance rationale accepted/approved by MSFC

# STS-101/ET-102 Delta Pre-Flight Review Agenda

- *Weld Instruction Card (WIC) Certification Status* — *Don Bolstad*
- ***STS-101/ET-102 Missing X-Ray Film*** — ***Glen Wadge***
- *Readiness Statement*
- *Appendix*
  - WIC Certification
    - *Charts presented at Pre-Flight Review on 3/17/00*

102DeltaPFR.4250.dd.03/00

# STS-101/ET-102 Missing X-Ray Film

***Issue***

- Incomplete or incorrect radiographic inspection records for ET-102 LO2 and LH2 tank welds

***Background***

- Review of enhancement change to the External Tank Weld Acceptance Document identified an error in the O1 weld radiographic inspection +Z clocking location
  - All ET-102 O-1 issues have been resolved
- O1 weld assessment resulted in subsequent re-review of all ET-102 x-ray film and inspection records for adequate film coverage
  - Re-review for adequate film coverage included:
    - Verification that the film covered the correct location/length
    - Penetrameter coverage was correct
  - 4 suspect areas have been identified

# HFF-4 Weld (LH2 Tank Forward Frame)

## *Weld Location*

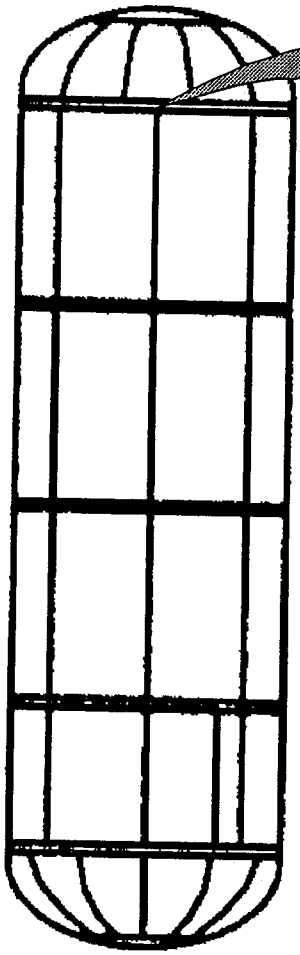

LH2 Tank
(+Y Shown)

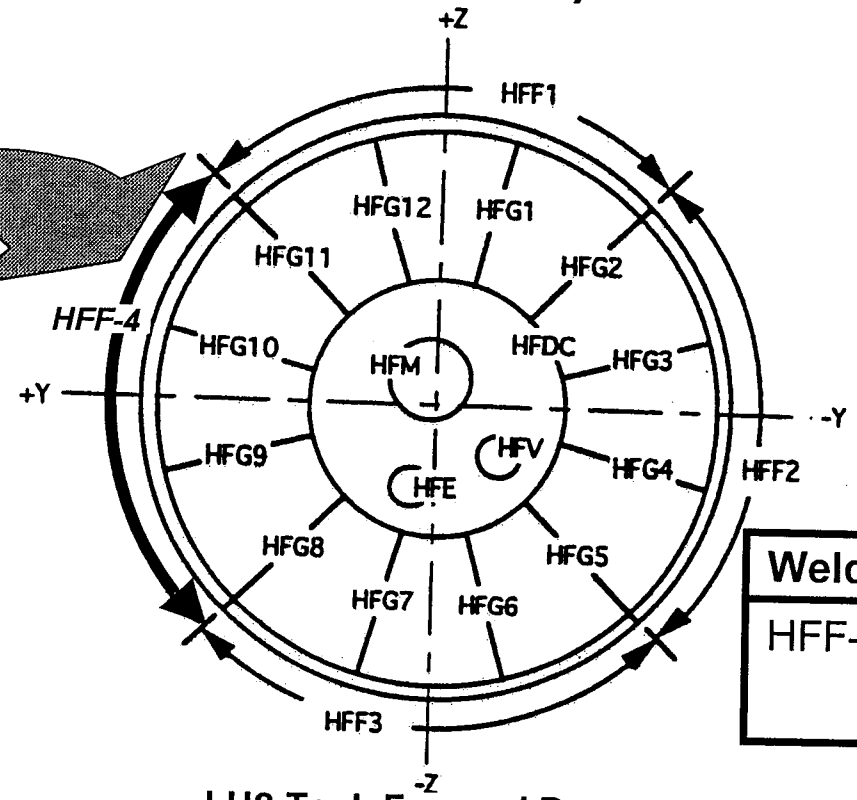


LH2 Tank Forward Dome
(Looking Aft)

| Weld | Location |
|---|---|
| HFF-4 | 1022" - 1025" |
| | 1025" - 1028" |

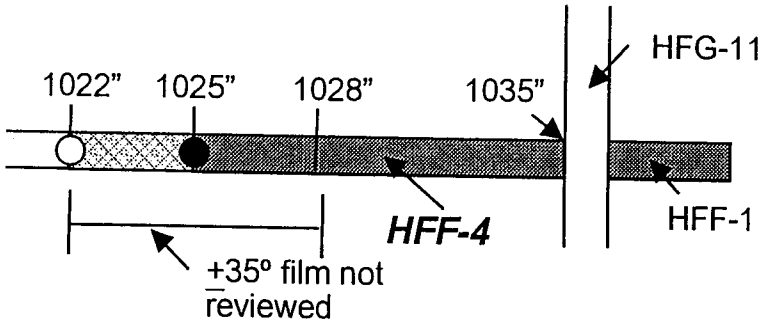


- ○ Correct "penny" location
- ● Mislocated "penny"
- Certifiable film
- Readable film

102DeltaPFR.4250.dd.03/00

# HFF-4 Weld (LH2 Tank Forward Frame)

- ***Issue***
  - 1022" to 1025"
    - Film lies outside "penny" location for $\pm 35^{o}$ radiographs
    - $\pm 35^{o}$ radiographs were not accepted by either LMC or DCMC
  - 1025" to 1028"
    - $\pm 35^{o}$ radiographs not reviewed by LMC nor DCMC
- ***Actions Taken During Re-Review***
  - LMC reviewed and accepted $\pm 35^{o}$ radiographs
  - DCMC
    - 1022" - 1025": No visible defects
    - 1025" - 1028": Acceptable film
- ***Rationale for Acceptance***
  - 1025" - 1028"
    - Certified radiographs were read by both LMC and DCMC and accepted
  - 1022" - 1025"
    - Film clarity outside of "penny" (at 1025") was readable film and validated by O-1 radiograph demonstration
      - Accepted by LMC
      - LMC and DCMC found no indications

# ODG-5 and ODG-9 Weld (LO2 Tank Dome Gore)

***Weld Location***

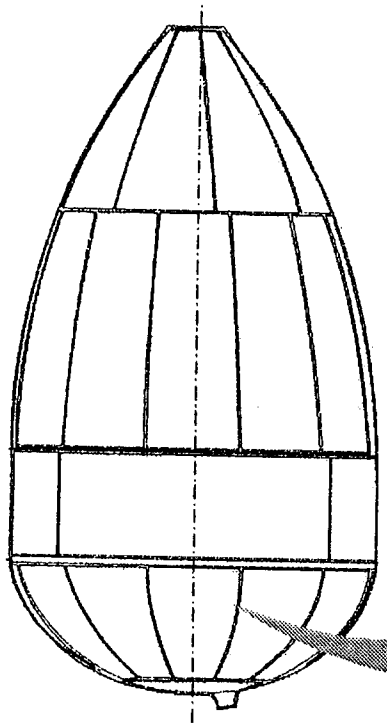

LO2 Tank
(+Z Shown)

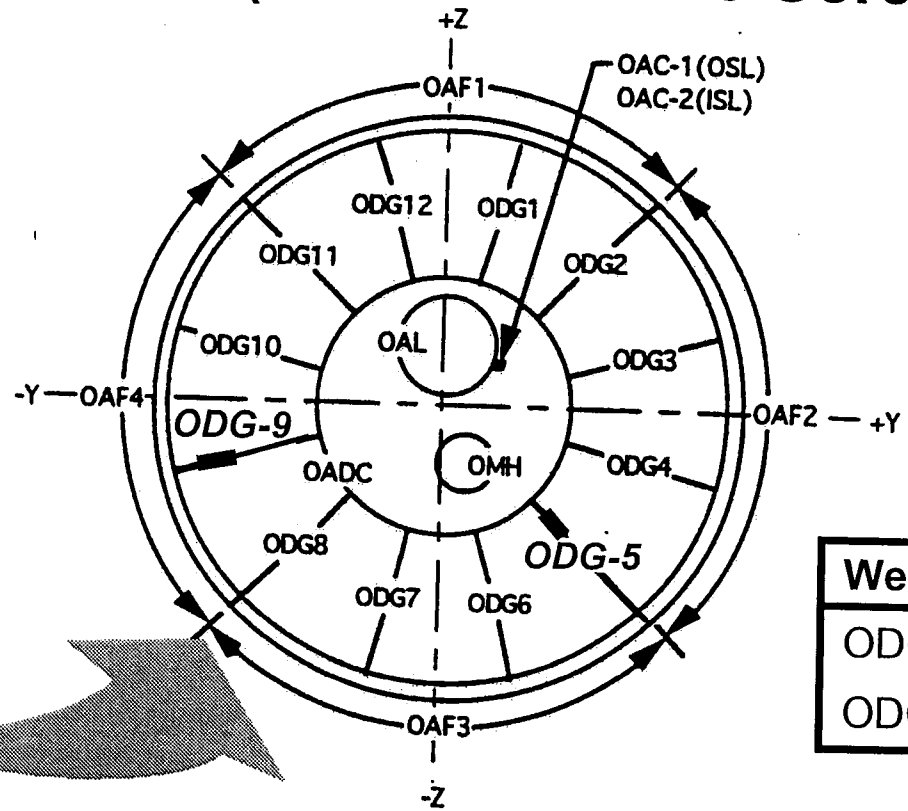


LO2 Tank Dome
(Looking Forward)

| Weld | Location |
|---|---|
| ODG-5 | 100" - 116" |
| ODG-9 | 19" - 32.25" |

102DeltaPFR.4250.dd.03/00

# ODG-5 and ODG-9 Weld (LO2 Tank Dome Gore)

- ***Issue***
  - Post proof #1 radiographs (90°) at these locations were misplaced after LMC review
- ***Actions Taken During Re-Review***
  - LMC and DCMC reviewed pre-proof #1 radiographs
    - Review showed 0.025" inclusion in ODG-5
      - Accepted pre-proof
- ***Rationale for Acceptance***
  - Adequacy of proof
    - ODG-5 = 104%
    - ODG-9 = 130%
  - LMC review of post proof #1 radiographs showed no rejectable conditions
  - Deleted "at risk" classification of the ODG for ET-104 and subs
    - Presented to and accepted by LMC and MSFC Fracture Control Boards (9/3/98)
  - Fracture analysis using a 2x factor on the 0.025" inclusion predicts a life of > 127,000 missions
  - Fracture analysis of a hypothetical flaw equal to weld grade length (0.400") predicts a life of 1668 missions

# OADC Weld (LO2 Tank Dome Cap to Gore)

## *Weld Location*

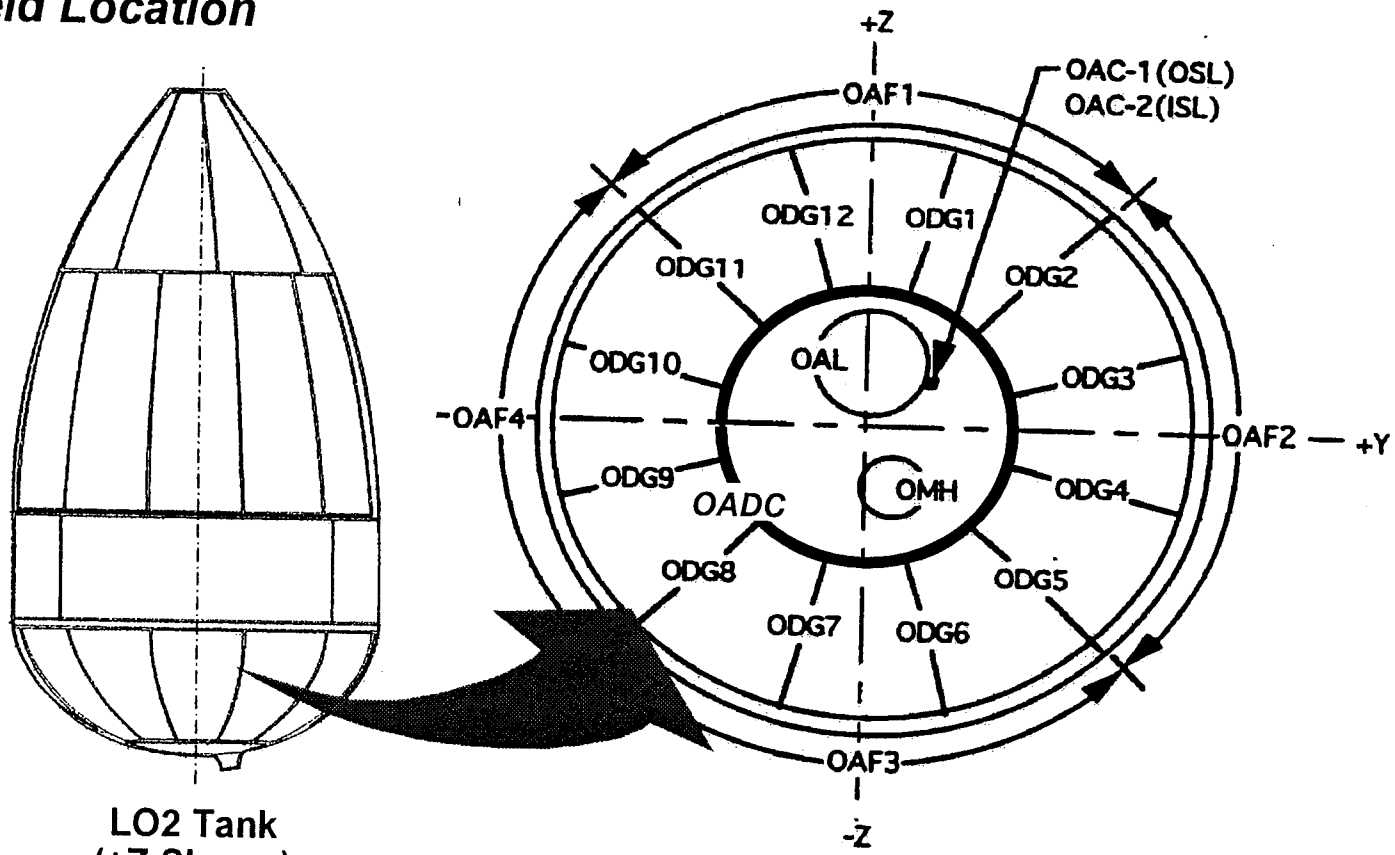


**LO2 Tank**
**(+Z Shown)**

**LO2 Tank Dome**
**(Looking Forward)**

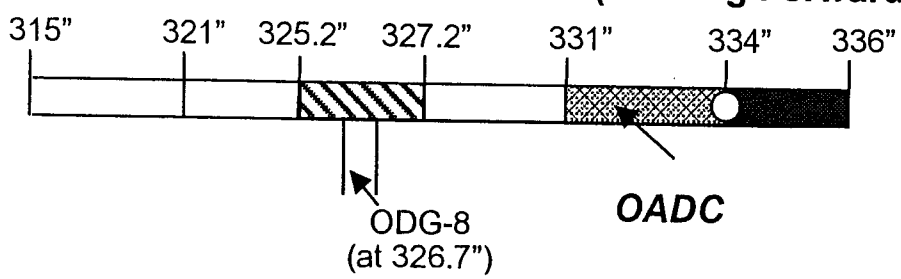


- ○ Penny location
- ■ Acceptable film
- ▩ Readable film
- ▧ ODG-8 intersection film only
- □ No film

102DeltaPFR.4250.dd.03/00

# OADC Weld (LO2 Tank Dome Cap to Gore)

- ***Issue***
  - 315”-321” (Area 6” from planished area)
    - No x-ray film available after proof test #2
  - 321”-325” and 327”-331” (planished area)
    - No x-ray film available after proof test #2
  - 325”-327” (Area repaired as part of ODG-8 repair)
    - No angle shot available after proof test #2
    - $90^{o}$ radiograph acceptance was not documented
  - 331”-334” (Area 6” from planished area)
    - Readable film from adjacent repair
  - 334”-336”(Area adjacent to repair)
    - Acceptable film from adjacent repair

- ***Actions Taken During Re-Review***
  - Reviewed post proof #1 radiographs
    - No change from pre-proof - No rejectable conditions in this area
    - Max indication = 0.040” rounded porosity

# OADC Weld (LO2 Tank Dome Cap to Gore)

- ***Rationale for Acceptance***
  - OADC weld is proofed to 100% of flight limit load
  - Pre and post proof #1 x-ray film max indication < 0.040" rounded porosity
  - Post proof #1 x-ray film does not show any flaw growth from pre-proof film
  - OADC proof test #1 stress level (>20 ksi) should have enhanced any pre-existing crack or crack-like indication
    - No flaw growth expected from proof test #2 based on no flaw growth from proof test #1
  - Fracture analysis using a 2x factor on a 0.040" porosity predicts a life of > 14,000 missions
  - Fracture analysis of a hypothetical flaw equal to weld grade length (0.250") predicts a life of 1982 missions

# STS-101/ET-102 Missing X-Ray Film

*Summary*

- **Available film was reviewed by LMC and DCMC**
  - No issues identified
- **Review of pre-proof film where post proof was available, showed no changes in pre-proof indications**
- **Fracture analysis shows that mission life exceeds requirements of 4 missions**
- **Approved by MAF Fracture Control Board**

# STS-101/ET-102 Missing X-Ray Film

*Summary (continued)*

- **Presented to the MSFC Fracture Control Board and the MSFC Senior Management Review Board on 03/23/00**
  - MSFC accepted the technical rationale for disposition of the 4 areas of missing x-ray film
    - ET-102 is acceptable for flight pending closure of the following two items:
      - Completion of the DCMC review of post-proof At Risk weld x-rays for ET-102
      - Confirmation from Lockheed Martin Quality that all required post-proof x-rays (minus the four areas dispositioned by the boards) have been reviewed, accepted, and signed off for ET-102

# STS-101/ET-102 Missing X-Ray Film

***Confirmation from Lockheed Martin Quality that all required post-proof x-rays have been reviewed, accepted, and signed off for ET-102***

## *Normal Process Flow - Post Proof X-Ray*

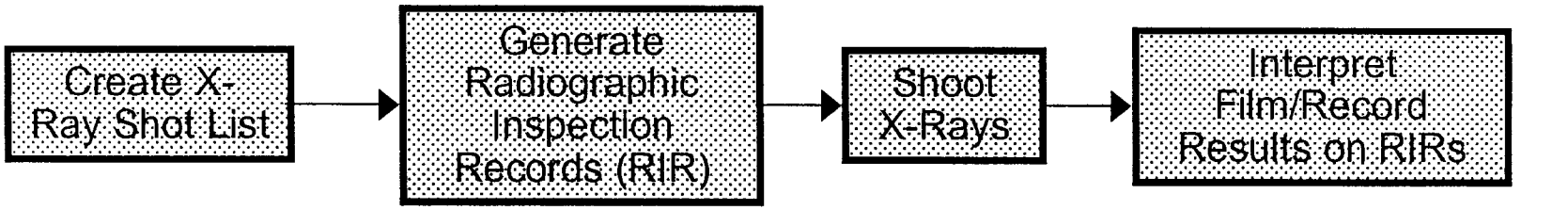


- Weld Acceptance Manual
- HAC Report (Repairs)
- Manufacturing Process Plans (MPP)
- Unique MRB Requirements

- Production Operations
- Product Assurance NDT
- DCMC

## *ET-102 Post Proof X-Ray Re-Review*

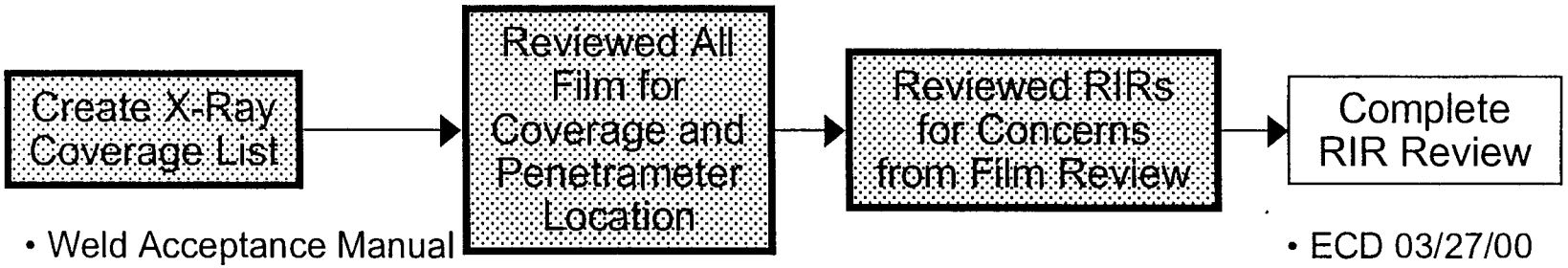


- Weld Acceptance Manual
- HAC Report (Repairs)
- Manufacturing Process Plans (MPP)
- Unique MRB Requirements

- ECD 03/27/00

**Actions Complete**

102DeltaPFR.4250.dd.03/00

# Readiness Statement

***The External Tank, ET-102, is hereby certified and ready for STS-101 flight pending completion/closure of open and planned work***

**Ronald W. Wetmore**
**Vice President, External Tank Project**
**Lockheed Martin Space Systems Company**

# Appendix

***Revised WIC Charts***
***Presented at STS-101/ET-102 Pre-Flight Review on 3/17/00***

# Weld Instruction Card (WIC) Certification

## Issue

- During a recent weld schedule review, it was determined that several of the weld schedules were incorrectly certified

## Background

- Weld certification requirements are established through Engineering process requirements documents
  - Certification requirements verify that weld schedules produce acceptable weld strengths and quality
  - Requirements are then restated and implemented in the "how to" manufacturing process documents
- Ambiguity of the weld process documents and reliance on institutional knowledge led to instances of incomplete testing for weld certification

# Weld Instruction Card (WIC) Certification

## Background (continued)

- Performed LMMSS Quality and Engineering review of all "as-built" ET welds including ET-102
  - Discrepancies were documented on non-conformance documents (NCDs)
  - Each NCD was individually analyzed, dispositioned and approved by LMMSS and NASA/MSFC
  - When necessary, additional welded panels were fabricated and tested
  - All discrepant weld schedules were reviewed to the correct certification condition
  - Weld operations were suspended until discrepancies were resolved

- Process escapes led to end-to-end weld process review
  - LMMSS and NASA/MSFC conducted a series of reviews in Fall '99 of all ET welding processes
    - No significant findings that required immediate implementation prior to weld operations resuming
    - 49 findings that require resolution:
      - Procedural enhancements
      - Communication/information flow down
      - Adherence to command media
      - Training enhancement opportunities
    - One additional issue identified during the NASA/LMMSS Review
      - Design strength of welds (cryogenic properties) due to effect of weld parameter variations was in question

# Weld Instruction Card (WIC) Certification

## Discussion

- Team conducted an assessment of the weld strength and cryogenic properties
  - Determined that adequate rationale existed for ET-102 clearance

- Assessment included
  - Weld-by-weld reviews
  - Review of as-built parameter charts
  - ET-102 as-delivered weld tests
  - Parameter range test data
  - Wide panel and confidence panel data
  - Fracture property review
  - Proof test stresses and history
  - Flight stress analysis

- LMMSS, with MSFC concurrence, initiated a test program that would verify the weld parameter variations (box) of all remaining ETs:
  - 9 weld schedules
  - 7 weld tools
  - RT and cryogenic tensile tests
  - Tested hot/hot weld schedules, nominal weld schedules and cold/cold weld schedules

# Weld Instruction Card (WIC) Certification

## Clearance Rationale Actions

- ET-102 weld-by-weld assessment completed (02/25/00)
  - Assessment results similar to ET-101 and ET-92 rationale
    - Cryogenic properties found to be acceptable
  - Data has been compiled and submitted to MSFC
    - Final acceptance rationale accepted/approved by MSFC

April 3, 2000

Space Shuttle
External Tank

# STS-101/ET-102 Delta Pre-Flight Review # 2

102DeltaPFR.4250.dd.03/00

# Discrepant Radiographic Inspection Records

## *Background*

- Open MSFC FCB/SMR actions at Delta Pre-Flight Review on 3/24/00
  1. DCMC to complete review of post-proof At Risk weld x-rays for ET-102
  2. Lockheed Martin Quality to confirm that all required post-proof x-rays (minus the four areas dispositioned by the boards) have been reviewed, accepted, and signed off for ET-102

# Discrepant Radiographic Inspection Records

## *Action Response*

1. DCMC review of post proof At Risk welds
   - Preliminary assessment showed nine instances of potential requirement violations
   - Upon further review and discussion with NASA/MSFC NDE, LM and DCMC, it was determined that eight of the nine items were associated with penetrameter (penny) coverage interpretation differences and were considered "no item"
   - One item remained - 0.200" inadequate penny coverage on ODG-4 at 88.2"
     - Area was defect free
     - Area proof tested to 130% of flight limit load
     - Item dispositioned use as is based on readable film beyond penny location
       - Testing by LM showed that x-ray coverage at focal distance of 42" provided 2T resolution up to ±13.6" from center of x-ray
       - Film in question was well inside the 13.6" area
         - Film exhibited uniform density
       - Accepted by LM Fracture Control Board
       - Rationale provided to MSFC - Pending MSFC approval

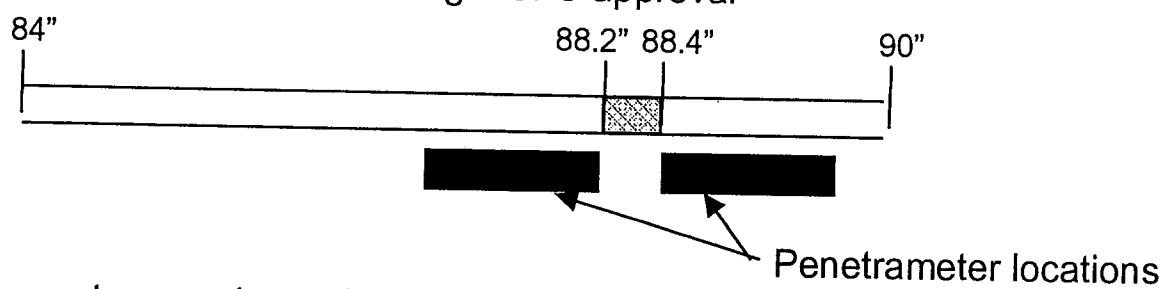


0.200" inadequate penetrameter coverage

102DeltaPFR#2.4250.dd.03/00

# Discrepant Radiographic Inspection Records

***Action Response***

2. Lockheed Martin Quality to confirm that all required post-proof x-rays have been reviewed, accepted, and signed off for ET-102
   - Review complete - Each step of the X-ray process was assessed to ensure that engineering requirements were properly executed
   - One additional item was revealed during the final weld by weld film review
     - 8.5" of inadequate film coverage for angle shots (±35°) for the H4 weld from 450" to 458.5"
       - Area proof tested to 97% of flight limit load
       - Pre-proof and post proof 90° film reviewed and acceptable
         - No defects noted - No flaw growth
       - Fracture analysis of hypothetical 0.250" flaw (weld grade) results in predicted life of 625 missions
       - Fracture analysis using a 2x factor on the 0.087" POD flaw predicts a life of1084 missions

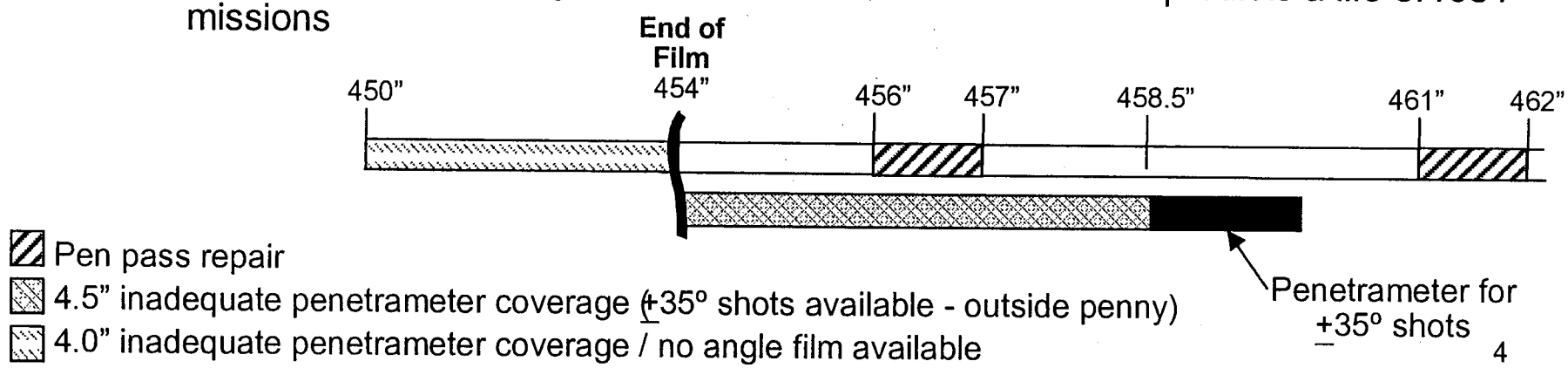


102DeltaPFR#2.4250.dd.03/00

# Discrepant Radiographic Inspection Records

## *Post Proof X-Ray Requirements Process Flow*

- ***Created flow chart to re-assess process to determine where discrepancies could occur***
  - Critical activities were reconstructed to ensure that all requirements were met
  - Reassessment showed that problem areas were primarily due to lack of formal documentation
    - Post proof requirements not formally incorporated in the MPP (Manufacturing Process Plan)
      - Multiple sources requirements (i.e. Weld Acceptance Manual, HAC report and replanned NCDs) for post proof requirement vs single source requirements for a typical process flow (integrated MPP)
    - Lack of adequate detail to define x-ray accountability and storage requirements

# Discrepant Radiographic Inspection Records

*Critical Activities Assessed for STS-101/ET-102 Re-Certification*

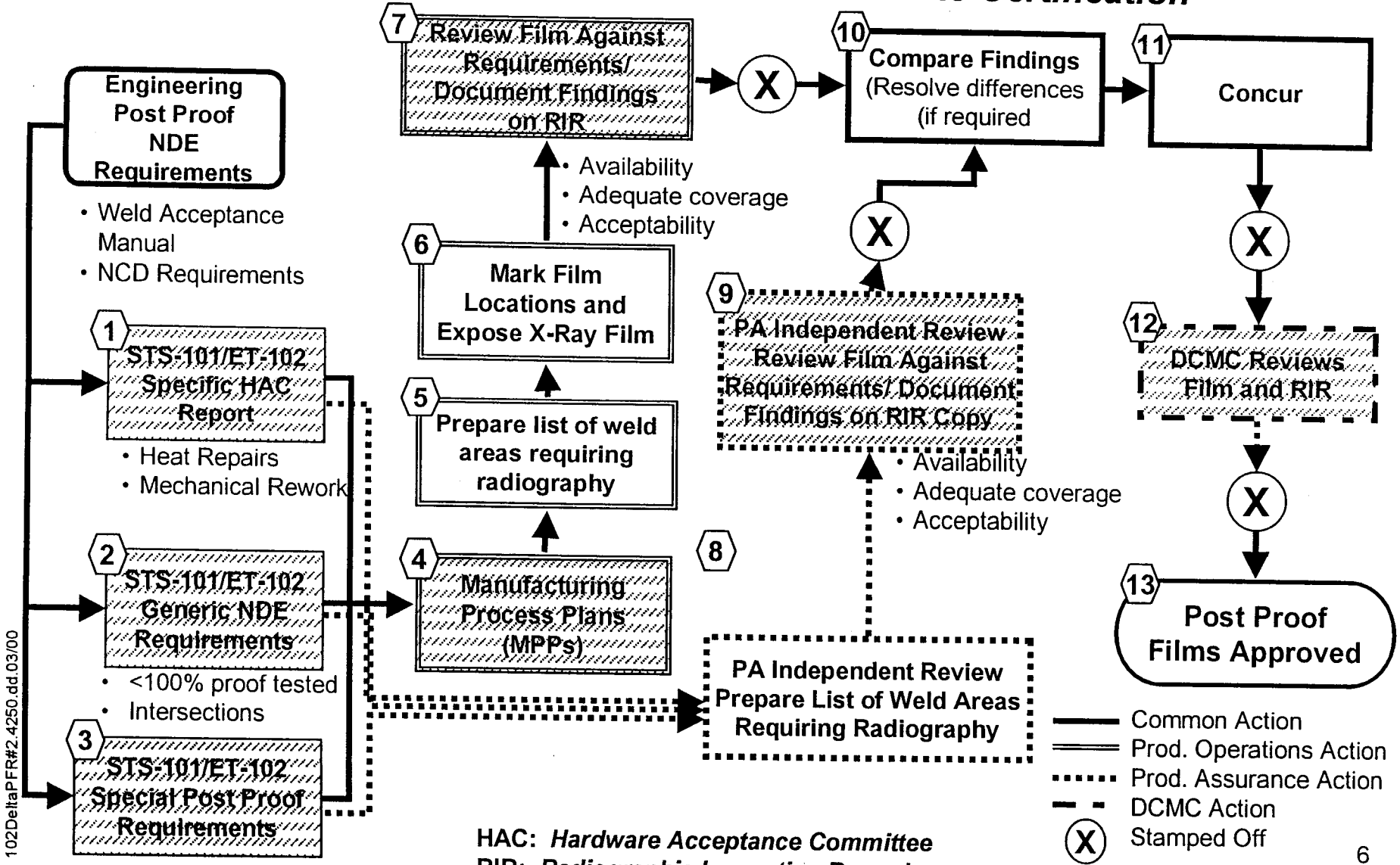


HAC: *Hardware Acceptance Committee*
RIR: *Radiographic Inspection Record*

102DeltaPFR#2.4250.dd.03/00

# Discrepant Radiographic Inspection Records

***Summary of STS-101/ET-102 Radiographic Inspection Re-Certification***

- ***STS-101/ET-102 is acceptable for flight***
  - Areas of discrepant film coverage analyzed to assure mission life requirement satisfied
    - Rationale accepted by LM Fracture Control Board
    - Rationale provided to MSFC - Pending MSFC approval

- ***Re-review of entire x-ray process for STS-101/ET-102 is complete***
  - No additional items identified

- ***Discrepancies subsequent to O-1 finding are isolated to post proof x-ray requirements that lacked formal documentation and to human error***
  - Weld Acceptance Manual has been revised to eliminate the O-1 misclocking concern
  - CAPS S-083 has been generated to determine corrective actions for the remaining discrepancies
    - Radiographic Inspection Process Improvement Team has been assembled to assess additional required corrective actions

# Readiness Statement

***The External Tank, ET-102, is hereby certified and ready for STS-101 flight pending completion/closure of open and planned work***

# STS-101/ET-102
# Delta Pre-Flight Review #2

## Back-Up

April 3, 2000

# Discrepant Radiographic Inspection Records

## *Items Assessed for STS-101/ET-102 Re-Certification*

### 1 *Hardware Acceptance Committee Report*

- HAC report identifies weld code, heat repairs, depeaking plannishing, location, length, and method to be performed for post proof x-ray
- HAC was compared to NCDs to verify that all reallocations and all NCDs were included in the ET-102 HAC report (effectively a reconstruction to ensure HAC report accuracy )
  - Build logs (effectivity driven) compared to as-built part number/serial number (As-Built Hardware Reporting System)
    - Assures that correct sub-assembly components were reviewed and included in RIRs
  - Data included in HAC report for each NCD was confirmed correct by comparing reconstructed HAC report to original HAC report
  - No non-conformances found

### 2 *NDE Requirements (80900000069)*

- ET-102 was part of the detailed post proof x-ray review in 6/99 that confirmed all detail requirements from the engineering requirements were correctly incorporated into the MPP
- Additional verification performed (3/28/00) to specifically confirm that all areas on ET-102 requiring x-ray (per engineering requirements) was properly included in the MPP
  - No discrepancies found

# Discrepant Radiographic Inspection Records

## *Items Assessed for STS-101/ET-102 Re-Certification*

### 3 *Special NCD (Replanned) Post Proof Requirements*

- Confirmed that there are no unaccounted for NCDs by producing a report from the LM Non-Conformance Management System (NMS)
- NCD tracking/accountability system requires 4 approvals prior to closure of an open NCD
  - All replanned ET-102 activity was included in planning
  - No discrepancies noted

### 4 *MPP Verification*

- Verified that Hardware Acceptance Committee Report, NDE Requirements (80900000069), Special NCD (Replanned) Post Proof Requirements were correctly incorporated into the MPP
  - ET-102 plan was correct

### 5 *Informal List of Areas Requiring Radiography ("shot list")*

- Production Operations developed "shot list" is compiled by individual to aid in layout and shooting of film
- List is later formalized in the RIR

# Discrepant Radiographic Inspection Records

## *Items Assessed for STS-101/ET-102 Re-Certification*

### 6 *Mark Film Locations, Layout Film and Shoot X-Rays*

- Place tape/pennies, layout film and expose film
- Record results in RIR
- Film availability/coverage and film interpretation is independently verified by activities in 7 and 9

### 7/9 *Reviewed Film Against Requirements/Documented Findings on RIR*

- Production Operations/Product Assurance team verified film coverage in RIR by comparing available film to MPP requirements (HAC report, NDE requirements, and special NCDs)
- Penny coverage verified by reviewing the film using the outer edge of the penny to verify adequate coverage
- RIR verified by comparing the RIR document to MPP requirements
- ***Results of this review were the previously discussed findings***

### 8 *Independent Product Assurance List of Areas Requiring Radiography*

- Product Assurance developed list is compiled by individuals to aid in assessing film availability/coverage and film interpretation
- List is later formalized in the Product Assurance independent RIR

102DeltaPFR#2.4250.dd.03/00

# Discrepant Radiographic Inspection Records

## *Items Assessed for STS-101/ET-102 Re-Certification*

### 10 *Compare Findings*

- Production Operations and independent review by Product Assurance compared the results documented on RIRs

### 11 *Concurrence*

- Production Operations and Product Assurance concur that MPP requirements are met

### 12

- ***DCMC Reviewed Film and RIR***
- Reviewed all post-proof film specified by weld acceptance manual and NCD
- Areas inside penetrameters were acceptable and areas outside penetrameters were readable - no defects were found

### 13 *Post Proof Film Approved*

- Film is bought off and packaged/maintained by Product Assurance
- ***Results of this review were the previously discussed findings***

102DeltaPFR#2.4250.dd.03/00